BMW 5-Series

Service Manual

525i, 530i, 535i, 540i, including Touring
1989, 1990, 1991, 1992,
1993, 1994, 1995

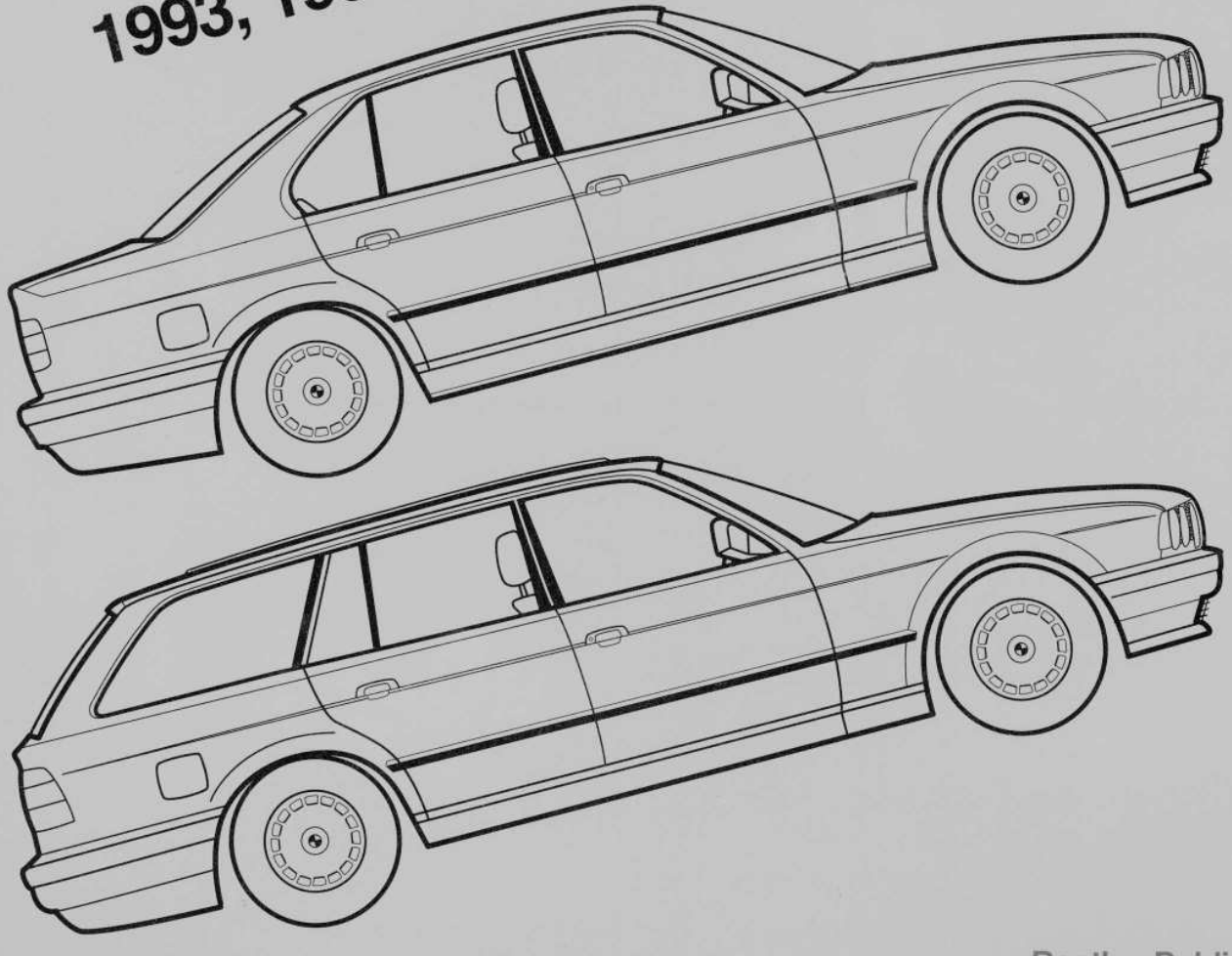

Bentley Publishers

Foreword v
Warnings and Cautions vii
Index ..... back of book

0 General Data and Maintenance

010 Fundamentals for the Do-it-yourself Owner
020 Maintenance Program

1 Engine

100 Engine—General
110 Engine Removal and Installation
113 Cylinder Head Removal and Installation
116 Cylinder Head and Valvetrain
117 Camshaft Timing Chain
118 Camshaft Timing Belt
119 Lubrication System
120 Ignition System—DME
121 Battery, Starter, Alternator
130 Fuel Injection—DME
160 Fuel Tank and Fuel Pump
170 Radiator and Cooling System
180 Exhaust System

2 Transmission

200 Transmission—General
210 Clutch
230 Manual Transmission
240 Automatic Transmission
250 Gearshift Linkage
260 Driveshaft

3 Suspension, Steering and Brakes

300 Suspension, Steering and Brakes—General
310 Front Suspension
320 Steering and Wheel Alignment
330 Rear Suspension
331 Final Drive
340 Brakes

4 Body

400 Body—General
410 Fenders, Engine Hood
411 Doors
412 Trunklid, Tailgate

5 Body Equipment

510 Exterior Trim, Bumpers
512 Door Windows
513 Interior Trim
515 Central Locking
520 Seats
540 Sunroof

6 Electrical System

600 Electrical System—General
610 Fuses and Relays
611 Wipers and Washers
612 Switches and Electrical Accessories
620 Instruments
630 Exterior Lighting
640 Heating and Air Conditioning
650 Radio

7 Equipment and Accessories

720 Seat Belts
721 Airbag System (SRS)

Electrical Wiring Diagrams

Selected Books and Electronic Editions From Bentley Publishers

Driving

The Unfair Advantage
Mark Donohue
ISBN 0-8376-0073-1 (hc); 0-8376-0069-3(pb)

Driving Forces: The Grand Prix Racing World Caught in the Maelstrom of the Third Reich
Peter Stevenson ISBN 0-8376-0217-3

A French Kiss With Death: Steve McQueen and the Making of *Le Mans*
Michael Keyser ISBN 0-8376-0234-3

The Speed Merchants: A Journey Through the World of Motor Racing 1969-1972
Michael Keyser ISBN 0-8376-0232-7

Going Faster! Mastering the Art of Race Driving
The Skip Barber Racing School
ISBN 0-8376-0227-0

The Racing Driver
Denis Jenkinson ISBN 0-8376-0201-7

Sports Car and Competition Driving
Paul Frère with foreword by Phil Hill
ISBN 0-8376-0202-5

Engineering

Maximum Boost: Designing, Testing, and Installing Turbocharger Systems
Corky Bell ISBN 0-8376-0160-6

Bosch Fuel Injection and Engine Management
Charles O. Probst, SAE ISBN 0-8376-0300-5

Race Car Aerodynamics
Joseph Katz ISBN 0-8376-0142-8

Reference

Road & Track Illustrated Automotive Dictionary
John Dinkel ISBN 0-8376-0143-6

Audi

Audi TT Official Factory Repair Manual MY 2000 Electronic Edition
Audi of America ISBN 0-8376-0758-2

Audi A4/S4 Official Factory Repair Manual 1996-2000 Electronic Edition
Bentley Publishers ISBN 0-8376-0761-2

Audi 80, 90 Coupe, Quattro Official Factory Repair Manual: 1988–1992
Audi of America ISBN 0-8376-0368-4

BMW

Complete Roundel 1969-1998 8 CD-ROM set: 30 Years of the Magazine of the BMW Car Club of America, Inc.
BMW Car Club of America ISBN 0-8376-0322-6

BMW 3-Series (E30) Service Manual: 1984–1990 318i, 325, 325e(es), 325i(is), and 325i Convertible
Bentley Publishers ISBN 0-8376-0325-0

BMW 3 Series (E36) Service Manual: 1992-1998, 318i/is/iC, 323is/iC, 325i/is/iC, 328i/is/iC, M3
Bentley Publishers ISBN 0-8376-0326-9

BMW 3 Series (E46) Service Manual: 1999-2001, 323i/Ci, 325i/Ci/xi, 328i/Ci, 330i/Ci/xi Sedan, Coupe, Convertible and Sport Wagon
Bentley Publishers ISBN 0-8376-0320-X

BMW 5-Series (E28) Service Manual: 1982–1988 528e, 533i, 535i, 535is
Bentley Publishers ISBN 0-8376-0318-8

BMW 5-Series (E34) Service Manual: 1989–1995 525i, 530i, 535i, 540i, including Touring
Bentley Publishers ISBN 0-8376-0319-6

BMW 7 Series (E32) Service Manual: 1988–1994, 735i, 735iL, 740i, 740iL, 750iL
Bentley Publishers ISBN 0-8376-0328-5

BMW Z3 Roadster Service Manual: 1996–1998, 4- and 6-cylinder engines
Bentley Publishers ISBN 0-8376-0328-5

BMW Enthusiast's Companion™
BMW Car Club of America
ISBN 0-8376-0321-8

BMW 3 Series Enthusiast's Companion™
Jeremy Walton ISBN 0-8376-0220-3

BMW 6 Series Enthusiast's Companion™
Jeremy Walton ISBN 0-8376-0149-5

Unbeatable BMW: Eighty Years of Engineering and Motorsport Success
Jeremy Walton ISBN 0-8376-0206-8

Chevrolet

Chevrolet by the Numbers 1955-1959: The Essential Chevrolet Parts Reference
Alan Colvin ISBN 0-8376-0875-9

Chevrolet by the Numbers 1960-1964: The Essential Chevrolet Parts Reference
Alan Colvin ISBN 0-8376-0936-4

Corvette 427: Practical Restoration of a '67 Roadster
Don Sherman ISBN 0-8376-0218-1

Corvette Fuel Injection & Electronic Engine Management: 1982-2001
Charles O. Probst, SAE ISBN 0-8376-0861-9

Ford

Ford Fuel Injection and Electronic Engine Control: 1988–1993
Charles O. Probst, SAE ISBN 0-8376-0301-3

The Official Ford Mustang 5.0 Technical Reference & Performance Handbook 1979-1993
Al Kirschenbaum ISBN 0-8376-0210-6

Harley-Davidson

Harley-Davidson Evolution V-Twin Owner's Bible™
Moses Ludel ISBN 0-8376-0146-0

Honda

Civic Duty: The Ultimate Guide to the World's Most Popular Sport Compact Car, the Honda Civic
Alan Paradise ISBN 0-8376-0215-7

Jeep

Jeep Owner's Bible™
Moses Ludel ISBN 0-8376-0154-1

Porsche

Porsche 911 Carrera Service Manual: 1984–1989, Coupe, Targa and Cabriolet
Bentley Publishers ISBN 0-8376-0291-2

Porsche 911 SC Service Manual: 1978–1983, Coupe, Targa and Cabriolet
Bentley Publishers ISBN 0-8376-0290-4

Saab

Saab 900 16 Valve Official Service Manual: 1985–1993
Bentley Publishers ISBN 0-8376-0312-9

Saab 900 8 Valve Official Service Manual: 1981–1988
Bentley Publishers ISBN 0-8376-0310-2

Toyota

Toyota Truck & Land Cruiser Owner's Bible™
Moses Ludel ISBN 0-8376-0159-2

Volkswagen

Battle for the Beetle: The Story of the Battle for the Giant VW Factory and the Car that Became an Icon Around the Globe
Karl Ludvigsen ISBN 08376-0071-5

Volkswagen Sport Tuning for Street and Competition
Per Schroëder ISBN 0-8376-0161-4

Jetta, Golf, GTI Service Manual: 1999-2002 2.0L Gasoline, 1.9L TDI Diesel, 2.8L VR6, 1.8L Turbo
Bentley Publishers ISBN 0-8376-0388-9

Jetta, Golf, GTI, Cabrio Service Manual: 1993–1999, including $Jetta_{III}$ and $Golf_{III}$
Bentley Publishers ISBN 0-8376-0366-8

Passat Official Factory Repair Manual 1998-2000 Electronic Edition
Bentley Publishers ISBN 0-8376-0763-9

Volvo

Volvo 240 Service Manual: 1983–1993
Bentley Publishers ISBN 0-8376-0285-8

RB www.BentleyPublishers.com

AUTOMOTIVE BOOKS AND MANUALS

Bentley Publishers has published service manuals and automobile books since 1950. Please write Bentley Publishers at 1734 Massachusetts Ave., Cambridge, MA 02138, visit our web site at www.BentleyPublishers.com, or call 1-800-423-4595 for a free copy of our complete catalog.

Foreword

This BMW 5-Series Service Manual covers the 1989 through 1995 525i models, the 1989 through 1993 535i models, and the 1994 and 1995 530i and 540i models, and is specifically designed to cover only those models built for sale in the United States.

BMW and most accessories and parts sellers specializing in BMWs refer to the 5-Series covered by this manual as the E34 model. The code "E34" is BMW's internal code for the basic platform shared by all of the cars covered by this manual. Except for the engine and a few other components, the models covered by this manual share many of same components such as suspension parts, body panels, and the interior pieces. When ordering parts, especially body parts, knowing the E34 code may be helpful.

BMW also uses an internal code for the various engines used in the E34 models. The engines used in the 525i models are either M20, M50, or M50TU. The engine used in the 535i is known as the M30. The engine used in the 530i and 540i is known as the M60. This information is primarily used internally by BMW, but may be helpful if you have access to BMW technical information.

For the BMW owner with basic mechanical skills, this manual gives detailed maintenance and repair information. In addition, the BMW owner who has no intention of working on his or her own car will find that owning and reading this manual will make it possible to be better informed and to discuss repairs more intelligently with a professional technician. This manual has been prepared from the repair information that BMW provides to its factory-trained technicians and has been developed primarily with the do-it-yourself BMW owner in mind. The aim throughout has been clarity and understanding with practical functional descriptions, step-by-step procedures, and accurate specifications.

The BMW owner intending to do maintenance and repair should have a set of tools including a set of metric wrenches and sockets, screwdrivers, a torque wrench, and feeler gauges, since these basic tools will be used to do the majority of the maintenance and repair procedures described in this manual. This manual includes detailed information on these basic tools and other tips for the beginner in the first section of the manual, entitled Fundamentals for the Do-It-Yourself Owner. For some of the repairs described in this manual, BMW technicians use special tools. The text will note when a repair requires these special tools and, where possible, will recommend practical alternatives.

We have endeavoured to ensure the highest degree of accuracy possible. When the vast array of data presented in the manual is taken into account, however, no claim to infallibility can be made. We therefore cannot be responsible for the result of any errors that may have crept into the text. The publisher encourages comments from the readers of this manual in regard to any errors and, also, suggestions for improvement in the presentation of technical material. These communications have been and will be carefully considered in the preparation of future printings of this and other manuals. Please write to Robert Bentley, Inc., Cambridge, Massachusetts 02138.

BMW offers extensive warranties, especially on components of the fuel delivery and emissions control systems. Therefore, before deciding to repair a BMW that may still be covered wholly or in part by any warranties issued by BMW of North America, consult your authorized BMW dealer. You may find that he can make the repair either free or at minimum cost.

Regardless of its age and whether or not it is still protected by warranty, your BMW is both an easy car to service and an easy car to get serviced. So if at any time a repair is needed that you feel is too difficult to do yourself, a trained BMW technician is ready to do the job for you. Each authorized BMW dealer service department has made a significant investment in service and diagnostic test equipment, specials tools, and BMW original parts. He is also the best source of the most up-to-date repair and service techniques, which includes factory training and technical literature. Servicing your BMW through an authorized BMW dealer will insure that your investment will be protected while maintaining the highest degree of service standards.

Robert Bentley

Please read these warnings and cautions before proceeding with maintenance and repair work.

WARNING—

- Some repairs may be beyond your capability. If you lack the skills, tools and equipment, or a suitable workplace for any procedure described in this manual, we suggest you leave such repairs to an authorized BMW dealer service department, or other qualified shop.

- Do not re-use any fasteners that are worn or deformed in normal use. Many fasteners are designed to be used only once and become unreliable and may fail when used a second time. This includes, but is not limited to, nuts, bolts, washers, self-locking nuts or bolts, circlips and cotter pins. Always replace these fasteners with new parts.

- Never work under a lifted car unless it is solidly supported on stands designed for the purpose. Do not support a car on cinder blocks, hollow tiles or other props that may crumble under continuous load. Never work under a car that is supported solely by a jack. Never work under the car while the engine is running.

- If you are going to work under a car on the ground, make sure that the ground is level. Block the wheels to keep the car from rolling. Disconnect the battery negative (–) terminal (Ground strap) to prevent others from starting the car while you are under it.

- Never run the engine unless the work area is well ventilated. Carbon monoxide kills.

- Finger rings, bracelets and other jewelry should be removed so that they cannot cause electrical shorts, get caught in running machinery, or be crushed by heavy parts.

- Tie long hair behind your head. Do not wear a necktie, a scarf, loose clothing, or a necklace when you work near machine tools or running engines. If your hair, clothing, or jewelry were to get caught in the machinery, severe injury could result.

- Do not attempt to work on your car if you do not feel well. You increase the danger of injury to yourself and others if you are tired, upset or have taken medication or any other substance that may keep you from being fully alert.

- Illuminate your work area adequately but safely. Use a portable safety light for working inside or under the car. Make sure the bulb is enclosed by a wire cage. The hot filament of an accidentally broken bulb can ignite spilled fuel or oil.

- Catch draining fuel, oil, or brake fluid in suitable containers. Do not use food or beverage containers that might mislead someone into drinking from them. Store flammable fluids away from fire hazards. Wipe up spills at once, but do not store the oily rags, which can ignite and burn spontaneously.

- Always observe good workshop practices. Wear goggles when you operate machine tools or work with battery acid. Gloves or other protective clothing should be worn whenever the job requires working with harmful substances.

- Greases, lubricants and other automotive chemicals contain toxic substances, many of which are absorbed directly through the skin. Read manufacturer's instructions and warnings carefully. Use hand and eye protection. Avoid direct skin contact.

- Friction materials such as brake or clutch discs may contain asbestos fibers. Do not create dust by grinding, sanding, or by cleaning with compressed air. Avoid breathing asbestos fibers and asbestos dust. Breathing asbestos can cause serious diseases such as asbestosis or cancer, and may result in death.

- Disconnect the battery negative (–) terminal (Ground strap) whenever you work on the fuel system or the electrical system. Do not smoke or work near heaters or other fire hazards. Keep an approved fire extinguisher handy.

- Batteries give off explosive hydrogen gas during charging. Keep sparks, lighted matches and open flame away from the top of the battery. If hydrogen gas escaping from the cap vents is ignited, it will ignite gas trapped in the cells and cause the battery to explode.

- Connect and disconnect battery cables, jumper cables or a battery charger only with the ignition switched off, to prevent sparks. Do not disconnect the battery while the engine is running.

- Do not quick-charge the battery (for boost starting) for longer than one minute. Wait at least one minute before boosting the battery a second time.

- Do not allow battery charging voltage to exceed 16.5 volts. If the battery begins producing gas or boiling violently, reduce the charging rate. Boosting a sulfated battery at a high charging rate can cause an explosion.

- The air-conditioning system is filled with chemical refrigerant, which is hazardous. The A/C system should be serviced only by trained technicians using approved refrigerant recovery/recycling equipment, trained in related safety precautions, and familiar with regulations governing the discharging and disposal of automotive chemical refrigerants.

- Do not expose any part of the A/C system to high temperatures such as open flame. Excessive heat will increase system pressure and may cause the system to burst.

- Some aerosol tire inflators are highly flammable. Be extremely cautious when repairing a tire that may have been inflated using an aerosol tire inflator. Keep sparks, open flame or other sources of ignition away from the tire repair area. Inflate and deflate the tire at least four times before breaking the bead from the rim. Completely remove the tire from the rim before attempting any repair.

- Some cars covered by this manual are equipped with a supplemental restraint system (SRS), that automatically deploys an airbag in the event of a frontal impact. The airbag is inflated by an explosive device. Handled improperly or without adequate safeguards, it can be accidently activated and cause serious injury.

- On cars equipped with anti-lock brakes (ABS), the ABS modular assembly is capable of "self-pressuring" up to 210 bar (3045 psi). Serious injury may result if the unit is not properly depressurized before servicing the system.

continued on next page

Please read these warnings and cautions before proceeding with maintenance and repair work.

CAUTION—

- If you lack the skills, tools and equipment, or a suitable workshop for any procedure described in this manual, we suggest you leave such repairs to an authorized BMW dealer or other qualified shop.

- BMW is constantly improving its cars and sometimes these changes, both in parts and specifications, are made applicable to earlier models. Therefore, part numbers listed in this manual are for reference only. Always check with your authorized BMW dealer parts department for the latest information.

- Before starting a job, make certain that you have all the necessary tools and parts on hand. Read all the instructions thoroughly, do not attempt shortcuts. Use tools appropriate to the work and use only replacement parts meeting BMW specifications. Makeshift tools, parts and procedures will not make good repairs.

- Use pneumatic and electric tools only to loosen threaded parts and fasteners. Never use these tools to tighten fasteners, especially on light alloy parts. Always use a torque wrench to tighten fasteners to the tightening torque specification listed.

- Be mindful of the environment and ecology. Before you drain the crankcase, find out the proper way to dispose of the oil. Do not pour oil onto the ground, down a drain, or into a stream, pond or lake. Consult local ordinances that govern the disposal of wastes.

- On cars equipped with the anti-lock brakes (ABS), the ABS control unit cannot withstand temperatures from a paint-drying booth or a heat lamp in excess of 203°F (95°C) and should not be subjected to temperatures in excess of 185°F (85°C) for more than two hours.

- Before doing any electrical welding on cars equipped with ABS, disconnect the battery negative (–) terminal (Ground strap) and the ABS control unit connector.

- On cars equipped with anti-theft radios, make sure you know the correct radio activation code before disconnecting the battery or removing the radio. If the wrong code is entered into the radio when power is restored, that radio may lock up and be rendered inoperable, even if the correct code is then entered.

- Connect and disconnect a battery charger only with the battery charger switched off.

- Do not quick-charge the battery (for boost starting) for longer than one minute. Wait at least one minute before boosting the battery a second time.

- Sealed or "maintenance free" batteries should be slow-charged only, at an amperage rate that is approximately 10% of the battery's ampere-hour (Ah) rating.

- Do not allow battery charging voltage to exceed 16.5 volts. If the battery begins producing gas or boiling violently, reduce the charging rate. Boosting a sulfated battery at a high charging rate can cause an explosion.

010 FUNDAMENTALS FOR THE DO-IT-YOURSELF OWNER

GENERAL 010-1

HOW TO USE THIS MANUAL 010-2
Warnings, Cautions and Notes 010-2

GETTING STARTED 010-2
Safety 010-2
Lifting the Car 010-3
To raise car safely 010-3
To work safely under car 010-4

ADVICE FOR THE BEGINNER 010-4
Planning Ahead 010-4
Cleanliness 010-4
Non-reusable Fasteners 010-4
Tightening Fasteners 010-4
Gaskets and Seals 010-5
Electrical Testing 010-5
Wire Repairs 010-6

BUYING PARTS 010-6
Genuine BMW Parts 010-6
Non-returnable Parts 010-6
Information You Need To Know 010-7

SERVICE 010-7

TOOLS 010-7
Basic Tool Requirements 010-8
Jack Stands 010-9
Oil Change Equipment 010-10
Torque Wrench 010-10
Feeler Gauges 010-10
Volt-Ohm Meter (VOM) or Multimeter 010-11
BMW Special Tools 010-11

EMERGENCIES 010-11
Changing a Tire 010-11
Car Will Not Start 010-12
Jump Starting 010-12
To jump start car 010-12
Overheating 010-13
Low Oil Pressure 010-13
Brake Fluid Level 010-13
Check Engine Warning Light 010-13
Dim Lights 010-13
Towing 010-14
Spare Parts Kit 010-14

TABLES

a. General Bolt Tightening Torques in Nm (max. permissible) 010-5

GENERAL

Although the BMW is a sophisticated and complex machine, basic maintenance can be accomplished by an interested owner with mechanical skills and the right information. Most of the preventive maintenance that is required in the lifetime of the average BMW is well within the capabilities of the do-it-yourselfer.

WARNING —
Do not use this manual unless you are familiar with basic automotive repair procedures and safe workshop practices. This manual illustrates the workshop procedures required for most service work; it is not a substitute for full and up-to-date information from the vehicle manufacturer or for proper training as an automotive technician. Note that it is not possible for us to anticipate all of the ways or conditions under which vehicles may be serviced or to provide cautions as to all of the possible hazards that may result.

WARNING —
Your common sense and good judgment are crucial to safe and successful service work. Read procedures through before starting them. Think about whether the condition of your car, your level of mechanical skill, or your level of reading comprehension might result in or contribute in some way to an occurrence that might cause you injury, damage your car, or result in an unsafe repair. If you have doubts for these or other reasons about your ability to perform safe repair work on your car, have the work done at an authorized BMW dealer or other qualified shop.

This section of the manual is intended to help the beginner get started. To begin with there is a discussion on **How To Use This Manual**. Tips on mechanic's skills and workshop practices that can help the beginner do a faster and more thorough job can be found under **Getting Started.** The basic tools needed to do most of the procedures in this manual are found under **Tools**. The section ends with a quick reference guide to **Emergencies**, including basic troubleshooting and information on how to gauge the seriousness of a problem.

HOW TO USE THIS MANUAL

The manual is divided into nine sections:

0 GENERAL DATA AND MAINTENANCE
1 ENGINE
2 TRANSMISSION
3 SUSPENSION, STEERING AND BRAKES
4 BODY
5 BODY EQUIPMENT
6 ELECTRICAL SYSTEM
7 EQUIPMENT AND ACCESSORIES
ELECTRICAL WIRING DIAGRAMS

0 GENERAL DATA AND MAINTENANCE covers the recommended maintenance schedules and service procedures needed to do BMW scheduled maintenance work. Also within this section is the **010 Fundamentals for the Do-it-yourself Owner** section, which contains basic instructions, tips and helpful hints for do-it-yourself maintenance and repair.

The next seven sections (1 through 7) are repair based and are further broken down into three digit repair groups. Each major section begins with a **General** repair group, e.g. **100 Engine—General.** These "00" (double zero) groups are mostly descriptive in nature, covering topics such as theory of operation and troubleshooting. The remainder of the repair groups contain the more involved repair information. The last major section contains detailed electrical wiring diagram schematics.

A master listing of the 9 major sections and the corresponding individual repair groups can be found on the inside front cover.

Each repair group begins with a Table of Contents listing the major subject headings within the group. Page numbers throughout the manual are organized according to the repair group system. For example, you can expect to find repair information on brakes (Repair Group 340) beginning on page 340-1. A comprehensive index can be found at the back of the manual.

Warnings, Cautions and Notes

Throughout this manual are many passages with the headings **WARNING**, **CAUTION**, or **NOTE**. These very important headings have different meanings.

WARNING —
The text under this heading warns of unsafe practices that are very likely to cause injury, either by direct threat to the person(s) doing the work or by increased risk of accident or mechanical failure while driving.

CAUTION —
A caution calls attention to important precautions to be observed during the repair work that will help prevent accidentally damaging the car or its parts.

NOTE —
A note contains helpful information, tips that will help in doing a better job and completing it more easily.

Please read every **WARNING**, **CAUTION**, and **NOTE** at the front of the manual and as they appear in repair procedures. They are very important. Read them before you begin any maintenance or repair job.

Some **WARNING**s and **CAUTION**s are repeated wherever they apply. Read them all. Do not skip any. These messages are important, even to the owner who never intends to work on the car.

GETTING STARTED

Most of the necessary maintenance and minor repair that an automobile will need can be done with ordinary tools, even by owners with little or no experience in car repair. Below is some important information on how to work safely, a discussion of what tools will be needed and how to use them, and a series of mechanic's tips on methods and workmanship.

Safety

Although an automobile presents many hazards, common sense and good equipment can help ensure safety. Many accidents happen because of carelessness. Pay attention and stick to these few important safety rules.

WARNING —
- *Never run the engine in the work area unless it is well-ventilated. The exhaust should be vented to the outside. Carbon Monoxide (CO) in the exhaust kills.*
- *Remove all neckties, scarfs, loose clothing, or jewelry when working near running engines or power tools. Tuck in shirts. Tie long hair and secure it under a cap. Severe injury can result from these things being caught in rotating parts.*
- *Remove rings, watches, and bracelets. Aside from the dangers of moving parts, metallic jewelry conducts electricity and may cause shorts, sparks, burns, or damage to the electrical system when accidentally contacting the battery or other electrical terminals.*
- *Disconnect the battery negative (–) cable whenever working on or near the fuel system or anything that is electrically powered. Accidental electrical contact may damage the electrical system or cause a fire.*

WARNING —

- *Never work under a lifted car unless it is solidly supported on jack stands that are intended for that purpose. Do not support a car on cinder blocks, bricks, or other objects that may shift or crumble under continuous load. Never work under a car that is supported only by the lifting jack.*
- *Fuel is highly flammable. When working around fuel, do not smoke or work near heaters or other fire hazards. Keep an approved fire extinguisher handy.*
- *Illuminate the work area adequately and safely. Use a portable safety light for working inside or under the car. A fluorescent type light is best because it gives off less heat. If using a light with a normal incandescent bulb, use rough service bulbs to avoid breakage. The hot filament of an accidentally broken bulb can ignite spilled fuel or oil.*
- *Keep sparks, lighted matches, and any open flame away from the top of the battery. Hydrogen gas emitted by the battery is highly flammable. Any nearby source of ignition may cause the battery to explode.*
- *Never lay tools or parts in the engine compartment or on top of the battery. They may fall into confined spaces and be difficult to retrieve, become caught in belts or other rotating parts when the engine is started, or cause electrical shorts and damage to the electrical system.*
- *The fuel system is designed to retain pressure even when the ignition is off. When working with the fuel system, loosen the fuel lines slowly to allow the residual pressure to dissipate gradually. Take precautions to avoid spraying fuel.*

Lifting the Car

For those repairs that require raising the car, the proper jacking points should be used to raise the car safely and avoid damage. There are four jacking points from which the car can be safely raised. The jack supplied with the car by BMW can only be used at the four side points—just behind the front wheel or just in front of the rear wheel. See Fig. 1.

WARNING —

- *When raising the car using a floor jack or a hydraulic lift, carefully position the jack pad to prevent damaging the car body. A suitable liner (wood, rubber, etc.) should be placed between the jack and the car to prevent body damage.*
- *Watch the jack closely. Make sure it stays stable and does not shift or tilt. As the car is raised, the car may roll slightly and the jack may shift.*

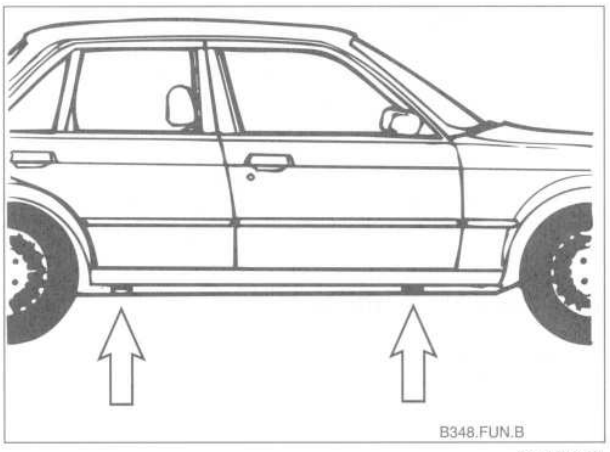

B348.FUN.B

Fig. 1. BMW jacking points (**arrows**).

To raise car safely

1. Park the car on a flat, level surface.
2. Place the jack in position. See Fig. 2. Make sure the jack is resting on flat, solid ground. Use a board or other support to provide a firm surface for the jack, if necessary.



B11038

Fig. 2. BMW supplied jack correctly positioned under front jacking point.

3. Raise the car slowly while constantly checking the position of the jack and the car.
4. Once the car is raised, block the wheel that is opposite and farthest from the jack to prevent the car from unexpectedly rolling.

> ***WARNING —***
> - *Do not rely on the transmission or the emergency brake to keep the car from rolling. They are not a substitute for positively blocking the opposite wheel.*
> - *Never work under a car that is supported only by a jack. Use jack stands that are properly designed to support the car. See* **Tools**.

To work safely under car

1. Disconnect the battery negative (–) cable so that no one else can start the car. Let others know what you will be doing.
2. Raise the car slowly as described above.
3. Use at least two jack stands to support the car. A jack is a temporary lifting device and should not be used alone to support the car while you are under it. Use jack stands designed for the purpose of supporting a car. For more information on jack stands, see **Tools** below.

> ***WARNING —***
> *Do not use wood, concrete blocks, or bricks to support a car. Wood may split. Blocks or bricks, while strong, are not designed for that kind of load, and may break or collapse.*

4. Place the jack stands on a firm, solid surface. If necessary, use a flat board or similar solid object to provide a firm footing.
5. Lower the car slowly until its weight is fully supported by the jack stands. Watch to make sure that the jack stands do not tip or lean as the car settles on them.
6. Observe all jacking precautions again when raising the car to remove the jack stands.

ADVICE FOR THE BEGINNER

The tips in the paragraphs that follow are general advice to help any do-it-yourself BMW owner perform repairs and maintenance tasks more easily and more professionally.

Planning Ahead

Most of the repairs and maintenance tasks described in this manual can be successfully completed by anyone with basic tools and abilities. Some cannot. To prevent getting in too deep, know what the whole job requires before starting. Read the procedure thoroughly, from beginning to end, in order to know just what to expect and what parts will have to be replaced.

Cleanliness

Keeping things organized, neat, and clean is essential to doing a good job. When working under the hood, fender covers will protect the finish from scratches and other damage. Make sure the car is relatively clean so that dirt under the cover does not scratch the finish.

Any repair job will be less troublesome if the parts are clean. For cleaning old parts, many solvents and parts cleaners are available commercially.

For cleaning parts prior to assembly, commercially available aerosol cans of carburetor cleaner or brake cleaner are handy to use, and the cleaner will evaporate completely.

> ***WARNING —***
> *Virtually all solvents used for cleaning parts are highly flammable, especially in aerosol form. Use with extreme care. Do not smoke. Do not use these products near any source of sparks or flame.*

Let any solvent or cleaning product dry completely. Low-pressure, dry compressed air is helpful if available. Also, use only lint-free rags for cleaning and drying.

> ***WARNING —***
> *Avoid getting tools or clothing near the battery. Battery electrolyte is a corrosive acid. Be careful with brake fluid, as it can damage the car's paint. Finally, keep rubber parts such as hoses and belts free from oil or gasoline, as they will cause the material to soften and fail prematurely.*

Non-reusable Fasteners

Many fasteners used on the cars covered by this manual must be replaced with new ones once they are removed. These include but are not limited to: bolts, nuts (self-locking, nylock, etc.), cotter pins, studs, brake fittings, roll pins, clips, and washers. Genuine BMW parts should be the only replacement parts used for this purpose.

Some bolts are designed to stretch during assembly and are permanently altered, rendering them unusable again. Always replace fasteners where instructed to do so. See an authorized BMW dealer for applications and ordering information.

Tightening Fasteners

When tightening the bolts or nuts that attach a component, it is always good practice to tighten the bolts gradually and evenly to avoid misalignment or over stressing any one portion of the component. For components sealed with gaskets, this method helps to ensure that the gasket will seal properly and completely.

Where there are several fasteners, tighten them in a sequence alternating between opposite sides of the component. Fig. 3 shows such a sequence for tightening six bolts attaching a typical component. Repeat the sequence until all the bolts are evenly tightened to the proper specification.

For some repairs a specific tightening sequence is necessary, or a particular order of assembly is required. Such special conditions are noted in the text, and the necessary sequence is described or illustrated. Where no specific torque is listed, **Table a** can be used as a general guide for tightening fasteners.

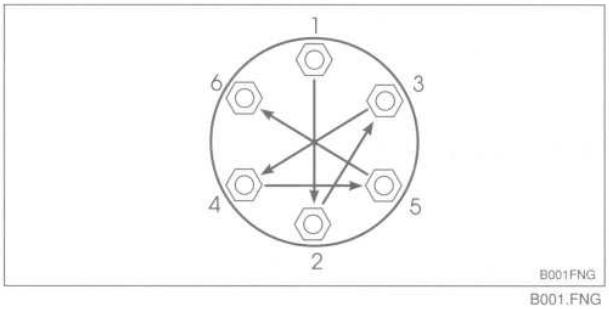

B001.FNG

Fig. 3. General sequence for alternately tightening multiple fasteners.

WARNING —

Table a *is a general reference only. The values listed in the table are not intended to be used as a substitute for torques specifically called out in the text throughout this manual.*

NOTE —

- *Metric bolt classes or grades are marked on the bolt head.*
- *Do not confuse wrench size with bolt diameter size. For a listing of the common wrenches used on various bolt diameters, see* **Basic Tool Requirements**.

Table a. General Bolt Tightening Torques in Nm (max. permissible)

Bolt diameter	Bolt Class (according to DIN 267)					
	5.6	5.8	6.8	8.8	10.9	12.9
M5	2.5	3.5	4.5	6	8	10
M6	4.5	6	7.5	10	14	17
M8	11	15	18	24	34	40
M10	23	30	36	47	66	79
M12	39	52	62	82	115	140
M14	62	82	98	130	180	220
M16	94	126	150	200	280	340
M18	130	174	210	280	390	470

Gaskets and Seals

The smoothest metal mating surfaces still have imperfections that can allow leakage. To prevent leakage at critical joints, gaskets of soft, form-fitting material are used to fill in the imperfections.

To be most effective, gaskets are designed to crush and become thinner as the mating parts are bolted together. Once a gasket has been used, it is no longer capable of making as good a seal as when new, and is much more likely to leak. For this reason, gaskets should not be reused. Always plan to use new gaskets for any reassembly. Some gaskets—such as headgaskets—are directional. Make sure that these are installed correctly. This same logic applies to any part used for sealing, including rubber O-rings and copper sealing washers.

In places where a shaft must pass through a housing, flexible lip seals are used to keep the lubricating oil or grease from leaking out past the rotating shaft. Seals should never be reused once they have been removed. When removing a seal, be careful not to scratch or otherwise damage the metal surfaces. Even minor damage to sealing surfaces can cause seal damage and leakage.

The key to seal installation is to get the seal in straight without damaging it. Use an object that is the same diameter as the seal housing to gently and evenly drive it into place. If a proper size seal driver is not available, a socket of the right size will do.

When installing a seal, coat the entire seal with oil to help it go in more easily. Seals are directional. Make sure that it is installed with the lip facing the correct way. Normally the lip faces the inside. Note the installation direction of the old seal before removing it.

Electrical Testing

A great many electrical problems can be understood and solved with only a little fundamental knowledge of how electrical circuits function.

Electric current only flows in a complete circuit. To operate, every electrical device in the car requires a complete circuit including a voltage source and a path to ground. The positive (+) side of the battery is the original voltage source, and ground is any return path to the negative (–) side of the battery, whether through the wiring harness or the car body. Except for portions of the charging system, all electrical current in the car is direct current (DC) and flows from positive (+) to negative (–).

Switches are used to turn components on or off by completing or interrupting the circuit. A switch is "open" when the circuit is interrupted, and "closed" when the circuit is completed. Fig. 4 shows a complete circuit schematically. See **600 Electrical System—General** for electrical troubleshooting.

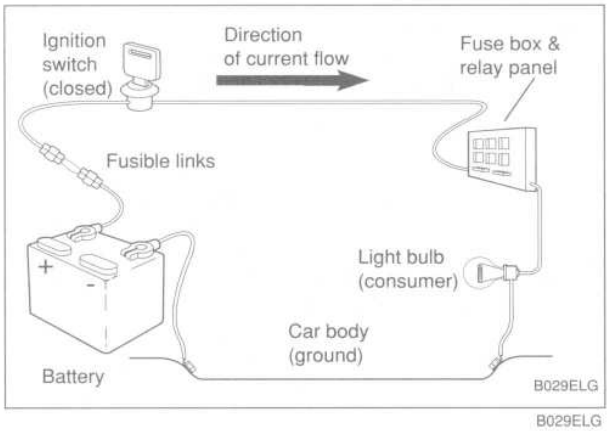

B029ELG

Fig. 4. Schematic representation of simple circuit for light bulb. Switch is shown closed, making circuit complete.

Wire Repairs

Repairs to a wiring harness deserve special care to make the repair permanent. The wire ends must be clean. If frayed or otherwise damaged, cut off the end. If the wire is too short, splice in a new piece of wire of the same size and make two connections.

Use connectors that are designed for the purpose. Crimped-on or soldered-on connectors are best. Crimp connectors and special crimping pliers are widely available. If soldering, use a needlenose pliers to hold the wire near the solder joint and create a "heat dam". This keeps the heat and the solder from traveling up the wire. Always use a solder made specifically for electrical work (rosin core).

NOTE —

Twisting wires together is only a temporary repair, since corrosion and vibration will eventually spoil the connection.

Insulate the finished connection. Electronics stores can supply heat-shrinkable insulating tubing that can be placed onto the wire before connecting, slid over the finished joint, and shrunk to a tight fit with a heat gun or hair dryer. The next best alternative is electrical tape. Make sure the wire is clean and free of solder flux or other contamination. Wrap the joint tightly to seal out moisture.

BUYING PARTS

Many of the maintenance and repair tasks in this manual call for the installation of new parts, or the use of new gaskets and other materials when reinstalling parts. Most often, the parts that will be needed should be on hand before beginning the job. Read the introductory text and the complete procedure to determine which parts will be needed.

NOTE —

For some bigger jobs, partial disassembly and inspection are required to determine a complete parts list. Read the procedure carefully and, if necessary, make other arrangements to get the necessary parts while your car is disassembled.

Genuine BMW Parts

Genuine BMW replacement parts from an authorized BMW dealer are designed and manufactured to the same high standards as the original parts. They will be the correct material, manufactured to the same specifications, and guaranteed to fit and work as intended by the engineers who designed the car. Some genuine BMW parts have a limited warranty.

Many independent repair shops make a point of using genuine BMW parts, even though they may at times be more expensive. They know the value of doing the job right with the right parts. Parts from other sources can be as good, particularly if manufactured by one of BMWs original equipment suppliers, but it is often difficult to know.

BMW is constantly updating and improving their cars, often making improvements during a given model year. BMW may recommend a newer, improved part as a replacement, and your authorized dealer's parts department will know about it and provide it. The BMW parts organization is best equipped to deal with any BMW parts needs.

Non-returnable Parts

Some parts cannot be returned for credit, even if they are the wrong parts for the car. The best example is electrical parts, which are almost universally considered non-returnable because they are so easily damaged internally.

Buy electrical parts carefully, and be as sure as possible that a replacement is needed, especially for expensive parts such as electronic control units. It may be wise to let an authorized BMW dealer or other qualified shop confirm your diagnosis before replacing an expensive part that cannot be returned.

Information You Need To Know

Model. When ordering parts it is important that you know the correct model designation for your car. Models covered in this manual are 525i, 530i, 535i, and 540i, including Touring models.

Model Year. This is not necessarily the same as date of manufacture or date of sale. A 1989 model may have been manufactured in late 1988, and perhaps not sold until early 1990. It is still a 1989 model. Model years covered by this manual are 1989 through 1995.

Date of Manufacture. This information is helpful when ordering replacement parts or determining if any of the warranty recalls are applicable to your car. The label on the driver's door below the door latch will specify the month and year that the car was built.

Vehicle Identification Number (VIN). This is a combination of letters and numbers that identify the particular car. The VIN appears on the state registration document, and on the car itself. One location, shown in Fig. 5, is in the rear of the engine compartment, below the passenger side wiper arm.



B11039

Fig. 5. Location of vehicle identification number (VIN) in rear of engine compartment (**arrow**).

The National Highway Traffic Safety Administration (NHTSA) requires passenger cars with a high theft rate to have the VIN marked on specific parts of the car when manufactured. On BMW cars, these parts are identified by an adhesive label.

Original parts are identified by a label bearing the VIN and two BMW roundel logos. Replacement parts have a similar label, bearing one BMW roundel logo and the letters DOT-R. See Fig. 6. Parts or assemblies bearing the label are the engine, transmission, front and rear bumpers, front fenders, rear quarter panels, hood, trunk lid and doors. These labels should not be removed as they will tear apart.

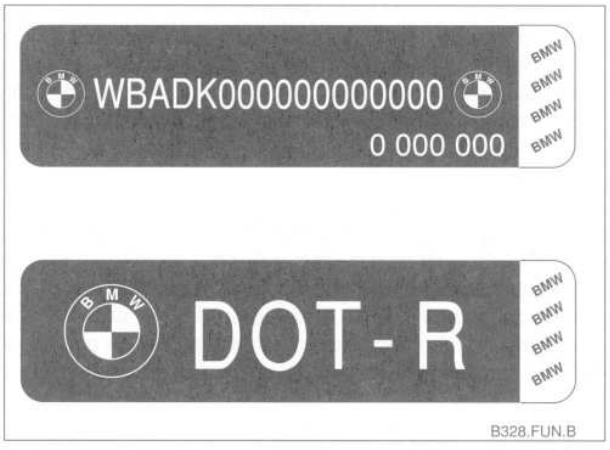

B328.FUN.B

Fig. 6. Labels used to identify parts. Original equipment label with VIN number and roundel logos (top) and replacement part label with one roundel logo.

Engine. BMWs covered in this manual are powered by various 6- and 8-cylinder engines. For information on engine codes and engine application, see **100 Engine—General**.

Transmission. The transmission type with its identifying code may be important when buying clutch parts, seals, gaskets, and other transmission-related parts. For information on transmission codes and applications, see **200 Transmission—General**.

SERVICE

BMW dealers are uniquely qualified to provide service for BMW cars. Their authorized relationship with the large BMW service organization means that they are constantly receiving new tools and equipment, together with the latest and most accurate repair information.

The BMW dealer's service technicians are highly trained and very capable. Unlike most independent repair shops, authorized BMW dealers are intensely committed to supporting the BMW product. They share the owner's interest in BMW value, performance, and reliability. On the other hand, there are many independent shops that specialize in BMW service and are capable of doing high quality repair work. Checking with other BMW owners for recommendations on service facilities is a good way to learn of reputable BMW shops in your area.

TOOLS

Most maintenance can be accomplished with a small selection of the right tools. Tools range in quality from inexpensive junk, which may break at first use, to very expensive and well-made tools for the professional. The best tools for most do-it-yourself BMW owners lie somewhere in between.

Many reputable tool manufacturers offer good quality, moderately priced tools with a lifetime guarantee. A broken tool can be exchanged for a new one, for the life of the tool. These are your best buy. They cost a little more, but they are good quality tools that will do what is expected of them. Sears' Craftsman® line is one such source of good quality, reasonably priced, and guaranteed tools.

Some of the repairs covered in this manual require the use of special tools, such as a custom puller or specialized electrical test equipment. These special tools are called out in text and can be purchased through an authorized BMW dealer. As an alternative, some special tools mentioned may be purchased from the following tool manufacturers and/or distributors:

- Assenmacher Specialty Tools
  6440 Odell Place, Boulder, CO 80301
  (303) 530-2424
- Baum Tools Unltd. Inc.
  P.O. Box 87, Longboat Key, FL 34228
  (800) 848-6657
- Schley Products Inc.
  5350 E. Hunter Ave., Anaheim Hills, CA 92807
  (714) 693-7666
- Zelenda Machine and Tool Corp.
  66-02 Austin Street, Forest Hills, NY 11375
  (718) 896-2288

Basic Tool Requirements

The basic hand tools described below can be used to accomplish most of the simple maintenance and repair tasks.

Screwdrivers. The common flat-blade type and the Phillips type will handle almost all screws used on BMWs. Two or three different sizes of each type will be best, since a screwdriver of the wrong size will damage the screw head. See Fig. 7.

A complete set of screwdrivers should also include Torx® type screwdrivers.

Wrenches. Wrenches come in different styles for different uses. Fig. 8 shows several. The basic open-end wrench is the most widely used, but grips on only two sides. It can spread apart and slip off more easily. The box-end wrench has better grip, on all six sides of a nut or bolt.

A 12-point box-end can loosen a nut or bolt where there is less room for movement, while a 6-point box-end provides better grip. For hex fasteners on fluid lines, like brake lines and fuel lines, a flare-nut wrench offers the advantages of a box-end wrench with a slot that allows it to fit over the line.

The combination wrench is the most universal. It has one open-end and one box-end. 10mm and 13mm wrenches are the most common sizes needed. A more complete set of wrenches would include 6mm through 19mm sizes.

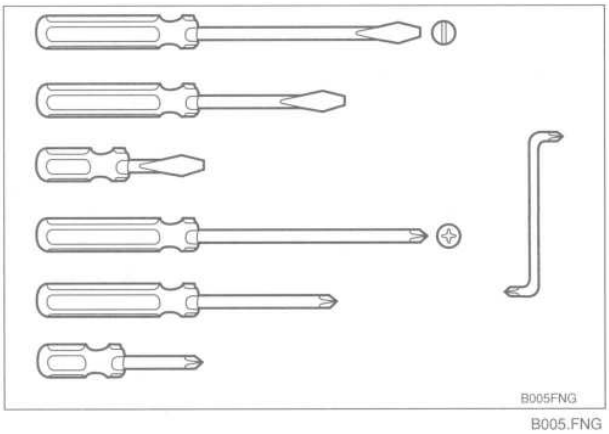

B005.FNG

Fig. 7. Common flat-blade (top) and Phillips (bottom) screwdrivers. Offset screwdriver (right) is used for screws with limited access.

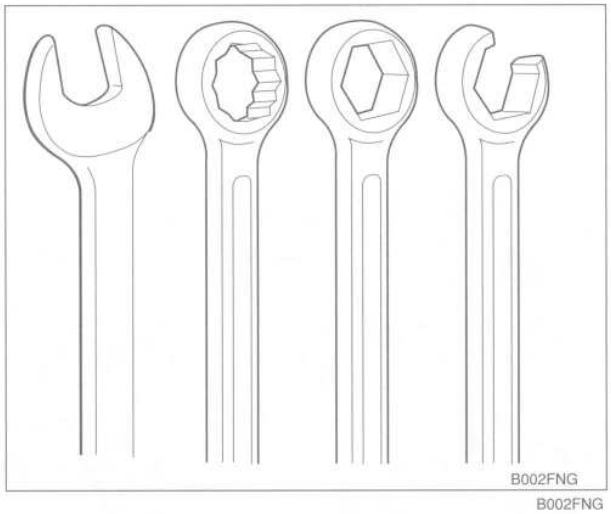

B002FNG

Fig. 8. Types of wrench heads. From left, open-end, 12-point box-end, 6-point box-end, flare nut.

Sockets. Sockets perform the same job as box-end wrenches, but offer greater flexibility. They are used with a ratchet handle for speed and convenience and can be combined with extensions and universal joints (swivels) to reach fasteners more easily. Sockets come with different size connections to drive handles or extensions, called the drive size. The most common drive sizes are 1/4 in., 3/8 in., and 1/2 in.

Sockets come in 6-point and 12-point styles. For use with a ratchet, the 6-point offers a better grip on tight nuts and bolts. 6mm to 19mm sockets are the most needed sizes. Below is a list of typical bolt diameters and the corresponding wrench sizes.

Bolt Diameter and Wrench Size

- M5 . . . . . 8mm
- M6 . . . . . 10mm
- M8 . . . . . 12mm or 13mm
- M10 . . . . . 17mm
- M12 . . . . . 19mm
- M14 . . . . . 22mm

Spark Plug Socket. A special socket for spark plugs is the correct size, is deep enough to accommodate a spark plug's length, and includes a rubber insert to both protect the spark plug from damage and grip it for easier removal. On all engines except M50 engines, use a $^{13}/_{16}$ in. socket. On the multi-valve M50 engine, use a $^{5}/_{8}$ in. socket. See Fig. 9.

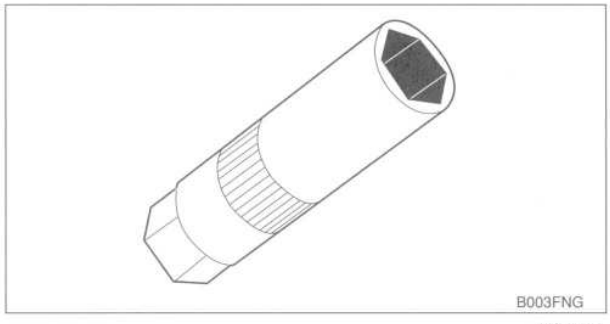

B003FNG

Fig. 9. Spark plug socket.

Pliers. A few of the many types of pliers are shown in Fig. 10. Most are used for holding irregular objects, bending, or crimping. Some have special applications.

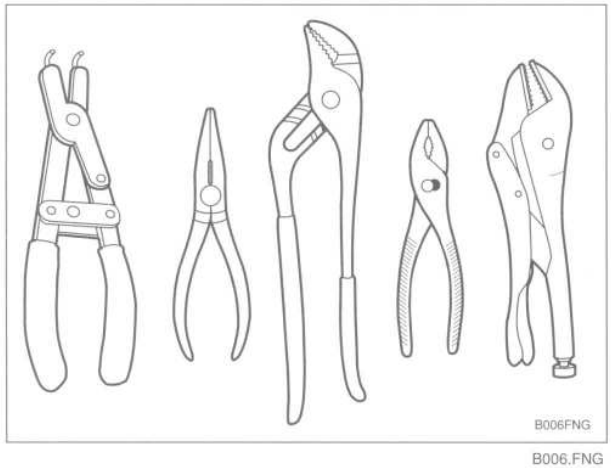

B006.FNG

Fig. 10. Pliers. From left, snap-ring, needlenose, adjustable-joint (Channel-lock®), slip-joint, and locking (Vise-Grip®).

A needlenose plier is used for gripping small and poorly accessible objects, and is useful for wiring and other electrical work. A locking plier such as the Vise-Grip® is useful because of its tight grip.

Snap-ring and circlip pliers with special tipped jaws are used to remove and install snap-rings or circlips. A Channel-lock® or water pump plier has adjustable jaws that can be quickly changed to match the size of the object being held to give greater leverage.

An adjustable wrench can be a useful addition to a small tool kit. See Fig. 11. It can substitute in a pinch, if two wrenches of the same size are needed to remove a nut and bolt. Use extra care with adjustable wrenches, as they tend to loosen, slip, and damage fasteners.

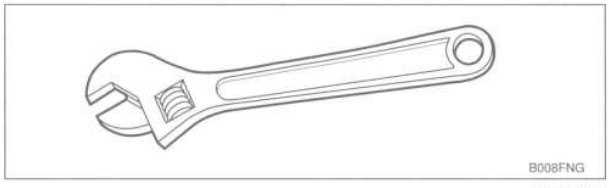

B008FNG

Fig. 11. Adjustable wrench.

Compared to a wrench of the correct size, an adjustable wrench is always second best. They should only be used when the correct size wrench is not available. Choose one of average size range, about 6 to 8 inches in length.

Jack Stands

Strong jack stands are extremely important for any work that is done under the car. Jacks are designed only for short term use and are not solid enough to support the car for a long period. A jack should never be used alone to support the car while working underneath.

Use only jack stands that are designed for the purpose. Blocks of wood, concrete, bricks, etc. are not safe or suitable substitutes.

Jack stands are available in several styles. A typical jack stand is shown in Fig. 12. The best ones are made of heavy material for strength, have a wide base for stability, and are equipped to positively lock in their raised positions. Get the best ones available.

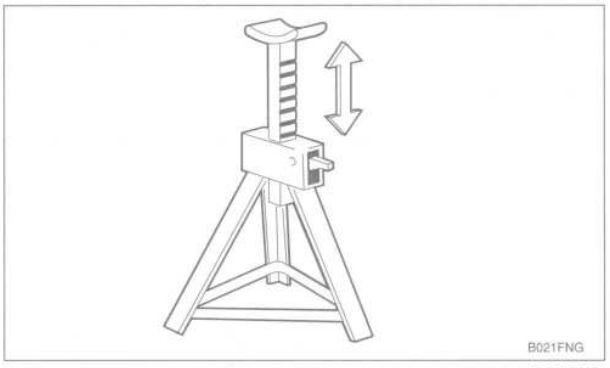

B021FNG

Fig. 12. Jack stand for safely supporting car to work underneath.

Oil Change Equipment

Changing engine oil requires a 17mm socket to loosen and tighten the drain plug, a drain pan (at least 8 qt. capacity), and an oil filter wrench. These items are shown in Fig. 13. A wide, low drain pan will fit more easily under the car. Use a funnel to pour the new oil into the engine.

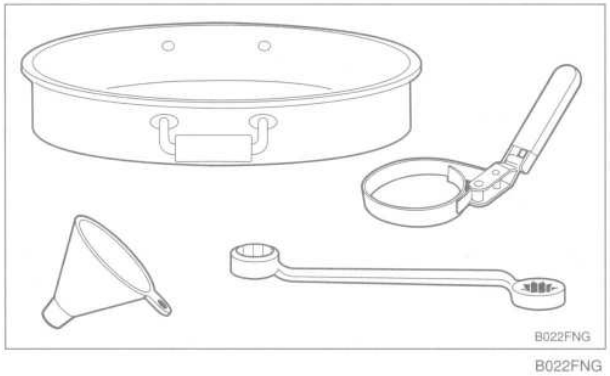

B022FNG

Fig. 13. Oil change equipment includes drain plug wrench (17mm), 8 qt. drain pan, oil filter wrench, and funnel.

Torque Wrench

A torque wrench is used to precisely tighten threaded fasteners to a predetermined value. Nearly all of the repair procedures in this manual include BMW-specified torque values in Newton-meters (Nm) and the equivalent values in foot-pounds (ft-lb).

Several types of torque wrenches are widely available. They all do the same job, but offer different convenience features at different prices. Two typical torque wrenches are shown in Fig. 14. The most convenient ones have a built-in ratchet, and can be preset to indicate when a specific torque value has been reached. Follow the wrench manufacturer's directions for use to achieve the greatest accuracy.

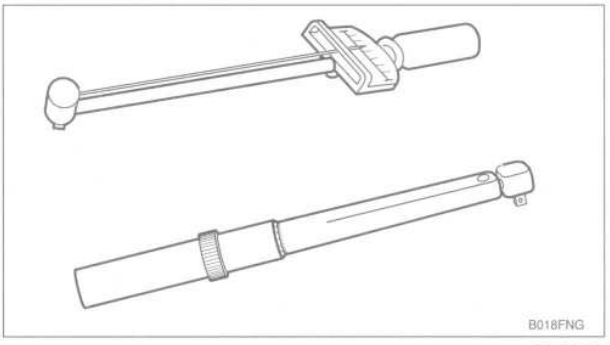

B018FNG

Fig. 14. Torque wrenches. Inexpensive beam-type (top) is adequate but must be read visually. Ratchet-type (bottom) can be preset to indicate when torque value has been reached.

A torque wrench with a range up to about 150 Nm (185 ft-lb) has adequate capacity for most of the repairs covered in this manual. For recommended torque values of 10 Nm or below, the English system equivalent is given in inch-pounds (in-lb). These small values may be most easily reached using a torque wrench calibrated in inch-pounds. To convert inch-pounds to foot-pounds, divide by 12.

Feeler Gauges

Feeler gauges are thin metal strips of precise thickness, used to measure small clearances. They are normally available as a set, covering a range of sizes.

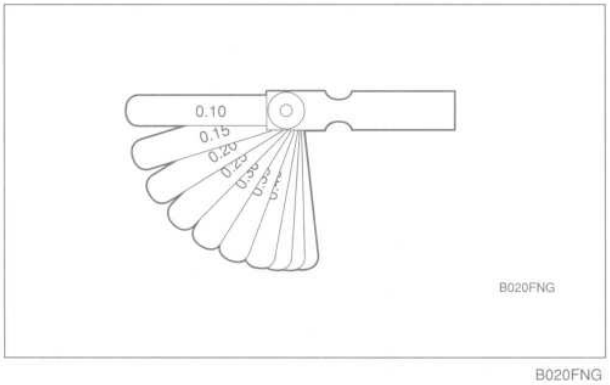

B020FNG

Fig. 15. Feeler gauge set, used for precise measurement jobs, such as checking valve clearances.

Volt-Ohm Meter (VOM) or Multimeter

Many of the electrical tests in this manual call for the measurement of resistance (ohms) or voltage values. For safe and accurate tests of ignition, fuel injection, and emission control systems, the multimeter, shown in Fig. 16, should be digital, with high (at least 10,000 ohms) input impedance. Some meters have automotive functions such as dwell and pulse width that are useful for troubleshooting ignition and fuel injection problems.

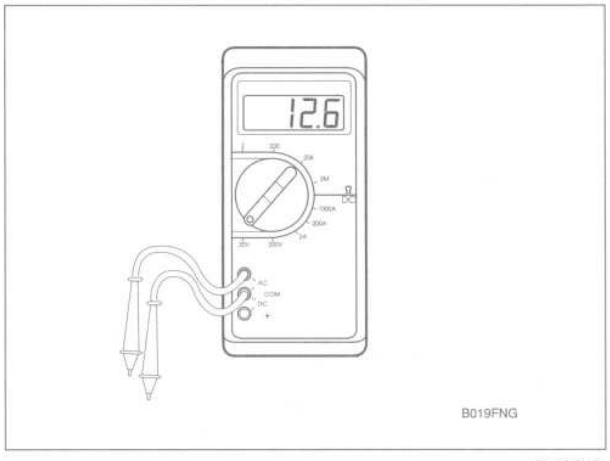

B019FNG

Fig. 16. Multimeter or Digital Volt/Ohmmeter (DVOM).

> ***CAUTION —***
> *The DME system, central body electronics, and other electronic systems may be damaged by the high current draw of a test light with a normal incandescent bulb. As a general rule, use a high impedance digital multimeter or an LED test light for all electrical testing.*

BMW Special Tools

Some of the more challenging repairs covered in this manual call for the use of BMW special tools. This, however, does not automatically mean that the job is too complicated or out of reach of the novice.

Many of the BMW special tools mentioned in this manual are simply the best thing to use to do the job correctly. In these cases, the tool is identified with a BMW part number. See your authorized BMW dealer parts department for information on how to order special tools.

There are some jobs for which expensive special tools are essential, and not a cost-effective purchase for one-time repair by the do-it-yourself owner. This manual includes such repairs for the benefit of those with the necessary experience and access to tools. For the do-it-yourselfer, the need for special tools is noted in the text, and whether or not BMW dealer service is recommended.

EMERGENCIES

Changing a Tire

If a tire goes flat while driving, pull well off the road. Changing a tire on a busy street or highway is very dangerous. If necessary, drive a short distance on the flat tire to get to a safe place. It is much better to ruin a tire or rim than to risk being hit.

Stop the car on as flat a surface as possible, in a place where you can be easily seen by other drivers. Avoid stopping just over the crest of a hill. Turn on the emergency flashers, and set out flares or emergency markers well behind the car. Passengers should get out of the car and stand well away from the road. Take the jack, tools, and spare wheel from the trunk. Chock the wheel diagonally opposite to the one being changed.

Loosen the wheel bolts while the car is on the ground, but leave them a little snug. Place the jack under the lifting point nearest the wheel being changed (lifting points are shown in Fig. 1). Use a board to provide a firm footing for the jack if the ground is soft. Raise the car only far enough so that the wheel is off the ground, and then remove the wheel nuts and the wheel.

Install the spare wheel. Install the wheel nuts and tighten them by hand, then lower the car. With all wheels on the ground, fully tighten the nuts in a crisscross pattern. Torque the wheel nuts when installing the wheel. Check the inflation pressure of the spare tire.

Tightening Torques

- Wheel bolts to wheel hub . . . . . 100 ± 10 Nm (74 ± 7 ft-lb)

Car Will Not Start

If the engine turns over slowly or not at all, especially on cold mornings, the battery may not be sufficiently charged. Jump-starting the battery from another car may help.

> ***WARNING —***
> *On cars with manual transmission, push starting (or tow starting) a car is not recommended by BMW.*

NOTE —

Be sure to read the cautions under **Jump Starting** *prior to boosting a low battery. Failure to follow the cautions may result in damage to the electronic components in the car.*

If the engine is turning over at normal speed with the starter motor, the battery and starter are fine. Check to make sure that there is fuel in the tank. Do not rely on the fuel gauge, it may be faulty. Instead, remove the gas filler cap and rock the car. If there is gas in the tank, you should hear a sloshing sound at the filler neck. If there is plenty of fuel in the tank, see **100 Engine—General** for in-depth diagnostics and troubleshooting procedures.

Jump Starting

Cars with discharged or dead batteries can be jump-started using the good battery from another car. When jump-starting the engine, always heed the following warnings.

> ***WARNING —***
> - *Battery acid (electrolyte) can cause severe burns, and will damage the car and clothing. If electrolyte is spilled, wash the surface with large quantities of water. If it gets into eyes, flush them with water for several minutes and call a doctor.*
> - *Batteries produce explosive and noxious gasses. Keep sparks and flames away. Do not smoke near batteries.*
> - *Do not jump-start the engine if you suspect that the battery is frozen. Trapped gas may explode. Allow the battery to thaw first.*
> - *Do not quick-charge the battery (for boost starting) for longer than one minute, and do not exceed 15 volts at the battery with the boosting cables attached. Wait at least one minute before boosting the battery a second time.*

To jump start car

1. Place the cars close together, but do not allow them to touch each other. Turn off the engine of the car with the good battery.

2. Connect one end of the positive (+) cable to the positive (+) post of the good battery. Remove the cover from the positive (B+) junction post in the engine compartment and connect the other end of the positive (+) cable to the junction post. See Fig. 17.

NOTE —

The positive post is marked with a plus (+) sign.

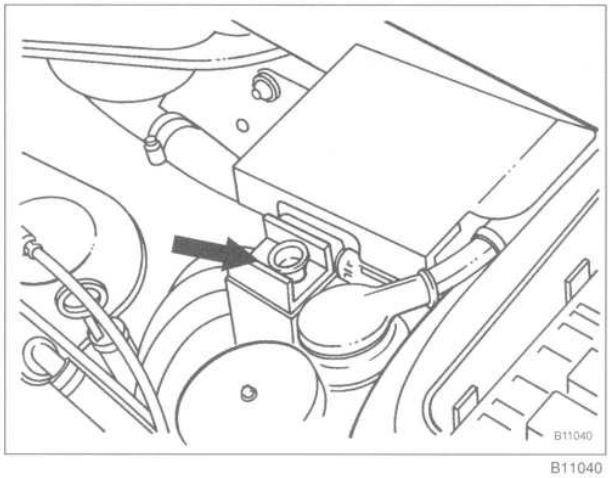

B11040

Fig. 17. Positive (B+) junction post in rear of engine compartment. Connect positive (+) jumper cable to post (**arrow**).

3. Connect one end of the negative (–) cable to the negative (–) battery post of the good battery. Connect the opposite end of the negative cable (–) to the engine block of the car with the dead battery.

4. Start the car with the good battery and run the engine at about 2,000 rpm, then start the car with the dead battery.

5. With the engine at idle, switch on the headlights, blower motor and rear window defogger to avoid damaging the cars electrical system. Then carefully disconnect the jumper cables, starting with the negative cable on the engine block. Turn all electrical consumers off.

NOTE —

The engine will need to run for at least an hour to recharge the battery.

Overheating

If the temperature gauge needle goes into the red band on the gauge face or the check control displays "COOLANT TEMP", the coolant temperature is too high. Find a safe place to stop and turn the engine off. Open the hood and allow the engine to cool until the temperature gauge needle is at the lower third of the scale. Continuing to drive an overheated car can cause extensive engine damage.

> ***WARNING —***
> *Do not remove the coolant reservoir or radiator cap with the engine hot. Undoing either could spray hot coolant and cause burns or damage the engine.*

> ***CAUTION —***
> *Do not add cold water or coolant to a hot engine. Engine damage could result from the sudden temperature change.*

NOTE —
If the engine cannot be safely turned off, make sure the air conditioner is off and turn the heater to high. This will help cool the engine until a safe stopping place can be reached.

Overheating may be caused by low coolant level or a damaged engine drive belt. Visually check the coolant level and engine belts as described in **020 Maintenance Program**. If the coolant level is low, check the filler cap, hoses, clamps and radiator for signs of leakage. Check for leaks at the water pump on the front of the engine.

If no leaks are found, add coolant after the engine has cooled. The car can be driven, but have the cooling system thoroughly checked as soon as possible. If replacement coolant is not available, then plain water can be used, but the coolant should later be drained and refilled with the proper mixture of anti-freeze and water.

If steam is coming from the engine compartment then there is most likely a burst coolant hose or a large leak in the cooling system. To find the leak, look for signs of coolant leakage on hoses, at hose connections, or on the radiator. Let the engine cool thoroughly, then add coolant or water to fill the system and start the engine. If a great deal of water or coolant flows out of the hole, then the car should not be driven until repairs are made. If there is a slight seepage, then it may be possible to drive a short distance, adding coolant as needed.

Low Oil Pressure

If either the red engine oil pressure warning light comes on or the check control displays "ENGINE OIL PRESS" anytime the engine is running, immediately stop the car and turn off the engine. Do not run the engine at all and have the car towed. If the light or graphic display remains on, do not run the car at all. Have it towed.

NOTE —
Detailed information on checking the oil pressure is covered in **119 Lubrication System**.

Brake Fluid Level

The red brake fluid level warning light may be an indicator of brake fluid loss. Problems with the brake system should be checked and repaired immediately. See **340 Brakes** for more information.

Check Engine Warning Light

If the "CHECK ENGINE" warning light comes on or flashes, it indicates that an emissions-related fault has occurred. Faults such as a failed oxygen sensor or a faulty fuel injector can turn the light on, causing the exhaust or evaporative emissions to exceed a specified limit. The engine can be safely driven with the light on, although the emission systems should be checked as soon as possible. See **100 Engine—General** for more information on the Check Engine Light and the On-board diagnostic system.

Dim Lights

Headlights and instrument panel illumination that are dim or gradually getting dimmer generally indicate a problem with the battery or charging system. The battery charge indicator light may come on as the lights are dimming. In either case, the engine and accessories are running off of the battery alone, and will soon discharge it altogether.

If possible, do not stop the engine unless you have the capability to jump start it. There may not be enough power in the starting system to restart the engine. Instead, turn off as many electrical consumers as possible. This will reduce the current drain and will allow the car to be driven farther before you lose all battery power.

With the engine and ignition off, check for loose or corroded battery cables or wires at the battery or the alternator. Disconnecting, cleaning, and reinstalling corroded wires and connectors may solve the problem. Also check drive belt tension as described in **020 Maintenance Program.**

Towing

The cars covered by this manual should be towed with a tow truck using wheel lift or flat bed equipment. Do not tow the car on all four wheels except for very short distances to move it to a safe place. If flat-towing the car, use the towing eyes at the front of the car under the bumper. Set the transmission in neutral.

When towing the car from the front with the rear wheels on the ground, a maximum distance of 20 miles is acceptable. If the car needs to be towed further, have the rear wheels placed on dollies.

NOTE —

Do not tow with sling-type equipment. The front spoilers and the bumpers may sustain damage.

Towing a BMW with an automatic transmission with the rear wheels on the ground can result in transmission damage due to lack of lubrication and should be avoided.

If absolutely necessary, cars with automatic transmission can be towed with the rear wheels on the ground, but the tow should not exceed 25 miles (40 km), or 30 mph (35 km/h). Be sure the transmission fluid has been topped off before starting the tow. Always tow the car with the transmission lever in "N" (neutral). If the tow must exceed 25 miles (40 km), add one quart of ATF to the transmission, or better yet, remove the driveshaft. Be sure to drain or pump out the added fluid once the tow has been completed.

NOTE —

- *ATF draining and filling is covered in* **240 Automatic Transmission**.
- *Driveshaft removal is covered in* **260 Driveshaft**.

Spare Parts Kit

Carrying a basic set of spare parts can prevent a minor breakdown from turning into a major annoyance. Many of the following items won't allow you to do major repair work on the car, but they will help in the event of the failure of something that can disable the car or compromise its safety.

Spare Parts Kit - Basic Contents

- Drive belts (alternator and/or water pump)
- Engine oil (one or two quarts)
- Engine coolant (1 gallon of premixed 50/50 anti-freeze and water)
- Fuse assortment (7.5A, 10A, 15A)
- Radiator hoses (upper and lower)
- **Spare Parts Kit - Additional Contents**
- Exterior lighting bulbs (headlight, brakelight, turn signal, and taillight)
- Wiper blades
- Brake fluid (new unopened bottle, DOT 4 specification)
- Main relay for DME system

020 Maintenance Program

GENERAL 020-2
BMW Service Indicator 020-2
Oil Service. 020-2
Inspection I and Inspection II 020-2
Resetting Service Indicator. 020-3

MAINTENANCE TABLES. 020-3

FLUID AND LUBRICANT SPECIFICATIONS 020-8

ENGINE OIL SERVICE. 020-9
Engine oil and filter, changing 020-9

ENGINE COMPARTMENT MAINTENANCE 020-10
Air filter element, replacing 020-10
Spark plugs, replacing 020-10
Distributor cap/rotor/spark plug wires, replacing 020-11
Fuel filter, replacing 020-11
Valve clearance, adjusting (M20/M30 engines) 020-11
Camshaft drive belt, replacing (M20 engine) 020-11
Battery maintenance 020-12
Throttle housing and linkage, lubricating . . . 020-12
V-belts, checking and replacing (M20, M30 engines) 020-12
Poly-ribbed belts, checking and replacing (M50 and M60 engines). 020-13
Cooling system maintenance 020-14
Power steering fluid level, checking 020-15
Brake/clutch fluid level, checking 020-15
Oxygen sensor, replacing 020-15

UNDER-CAR MAINTENANCE 020-16
Tires, checking inflation pressure 020-16
Tires, rotating 020-16
Wheels, aligning 020-16
Brake system, inspecting 020-16
Brake hoses and lines, inspecting 020-16
Brake pad/rotor wear, checking 020-16
Brake fluid, replacing 020-17
Parking brake, checking 020-17
Exhaust system, inspecting 020-17
Manual Transmission Service 020-17
Manual transmission oil, checking and filling 020-17
Automatic transmission service 020-17
Front suspension and steering linkages, inspecting 020-18
Rear suspension, inspecting 020-18
Final drive oil level, checking 020-18
Drive axle boots, inspecting. 020-18
Fuel tank and fuel lines, inspecting 020-18

BODY AND INTERIOR MAINTENANCE .020-18
Windshield wiper blades, replacing 020-18
HVAC micro-filter, replacing (1991 and later cars). 020-19
Body lubrication 020-19
Seat belts 020-19

CLEANING AND PRESERVING 020-19
Exterior finish care 020-19
Washing. 020-19
Waxing. 020-19
Chassis washing 020-19
Special cleaning. 020-19
Interior care 020-20
Vinyl and cloth upholstery and trim 020-20
Leather upholstery and trim 020-20

TABLES

a. Oil Service. 020-4
b. Inspection I Service. 020-5
c. Inspection II Service 020-6
d. Scheduled Maintenance— Time/Mileage Intervals. 020-7
e. Fluids and Lubricants 020-8
f. Spark Plug Applications 020-11

GENERAL

The information given in this repair group includes the routine checks and maintenance steps that are both required by BMW under the terms of the vehicle warranty protection and recommended by BMW to ensure long and reliable vehicle operation.

NOTE —

Aside from keeping your car in the best possible condition, proper maintenance plays a role in maintaining full protection under BMW's new-car warranty coverage. If in doubt about the terms and conditions of your car's warranty, an authorized BMW dealer should be able to explain them.

BMW has taken a unique approach to establishing maintenance intervals. BMW's Service Indicator System computes maintenance intervals based not only on elapsed mileage, but also on such inputs as engine speed, engine temperature, number of starts, and lengths of trips. At the appropriate time, the system indicates, through lights in the instrument cluster, when the next routine maintenance is due.

NOTE —

BMW is constantly updating their recommended maintenance procedures and requirements. The information contained here is as accurate as possible at the time of publication. If there is any doubt about what procedures apply to a specific model or model year, or what intervals should be followed, remember that an authorized BMW dealer has the latest information on factory-recommended maintenance.

BMW Service Indicator

The BMW Service Indicator notifies the driver when maintenance is required. The service indicator consists of multiple light emitting diodes (LEDs)—typically five green, one yellow, and one red—as well as **OIL SERVICE** and **INSPECTION** indicators.

When the ignition is turned on, the green LEDs come on. They go out when the engine is started. After the Service Indicator is reset, all green LEDs will be illuminated with the key on. As the car is driven in normal use, fewer and fewer green LEDs will be illuminated before start-up, indicating that the next maintenance interval is approaching.

When the car has accumulated sufficient use to require the next maintenance interval, the yellow LED will come on along with either the OIL SERVICE indicator or the INSPECTION indicator. These LEDs will stay on after the engine is started. If maintenance service is delayed, the red LED will also illuminate as a reminder that maintenance service is overdue.

An OIL SERVICE interval will always be followed by an INSPECTION interval, which will then be followed by an OIL SERVICE interval, and so on.

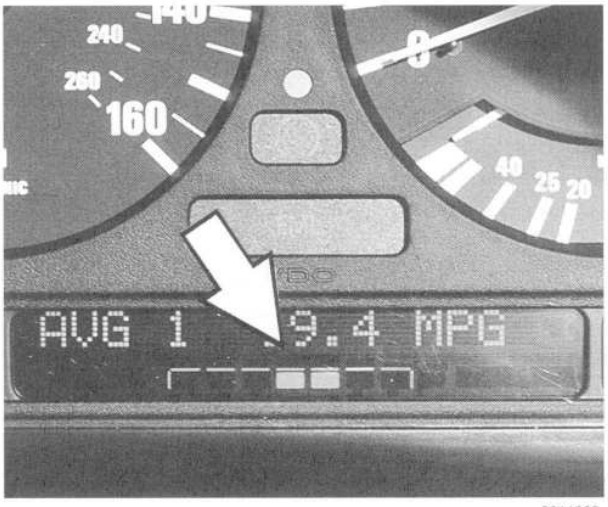

0011909

Fig. 1. Service indicator display in instrument panel.

Oil Service

The Oil Service indicator signals the need for the most basic level of routine maintenance. BMW's required oil service specifies changing the engine lubricating oil and the engine oil filter after the engine has been warmed up. BMW-recommended additional maintenance for this service is listed in **Table a**.

NOTE —

- *For reference, the BMW Oil Service requirements are approximately equivalent to the maintenance that other European manufacturers specify at intervals with a maximum of every 7,500 miles or 6 months.*
- *Be sure to follow the instructions for resetting the Oil Service indicator light. The Inspection indicator can be accidentally reset rendering its function inaccurate.*

Inspection I and Inspection II

The Inspection indicator signals the need for more comprehensive maintenance and inspection. There are two sets of inspection requirements, Inspection I and Inspection II. These inspections alternate throughout a car's maintenance history. If the last inspection interval was Inspection I, the next inspection interval (following an Oil Service) will be Inspection II, the next after that will be Inspection I, and so on.

Inspection I tasks are listed in **Table b**. Inspection II includes most of the tasks from Inspection I with additional Inspection II tasks. A complete listing of Inspection II tasks are listed in **Table c**.

NOTE —

- *For reference, the BMW Inspection I and Inspection II requirements are approximately equivalent to the maintenance requirements that other European manufacturers specify. Inspection I is normally due at intervals with a maximum of 15,000 miles or 12 months. Inspection II is normally due at intervals with a maximum of 30,000 miles or 24 months.*
- *On 1989-1990 525i models, the camshaft timing belt should be replaced every 60,000 miles (100,000 km), every 4 years (48 months), or every second inspection II, whichever comes first.*

Resetting Service Indicator

When the specified maintenance has been carried out, the service indicator memory should be reset.

The service indicator is reset using a special tool. The tool is plugged into the diagnostic connector in the engine compartment. See Fig. 2.



0011910

Fig. 2. Service indicator reset tool installed in diagnostic connector (aftermarket tool shown).

CAUTION —

Follow the manufacturer's directions when resetting the service indicator. If the reset procedures are done incorrectly, the reset tool or the electronic service indicator may be damaged.

Aftermarket reset tools can be purchased from one of the following manufacturers:

Assenmacher Specialty Tools
Boulder, CO 80301
(303) 530-2424

Peake Research, Automotive Products Division
P.O. Box 28776
San Jose, CA 95159
(408) 369-0406

MAINTENANCE TABLES

Table a, **Table b**, and **Table c** on the following pages list the routine maintenance tasks specified by BMW. The intervals for most of these tasks are determined by the Service Indicator. The maintenance intervals for a few additional items are based on either elapsed mileage or time. These intervals are clearly indicated in separate tables.

Except where noted, the maintenance items listed apply to all models and model years covered by this manual. The columns on the right side of each table give quick-reference information about the job. The bold text references the repair group where additional repair information can be found.

Table a. Oil Service

Maintenance item	Tools required	New parts required	Warm engine required	Dealer service recommended
Engine compartment maintenance				
Change oil and oil filter	*	*	*	
Check fluid levels (coolant, steering, brake/clutch, ATF)		*	*	
Under car maintenance				
Check steering box and steering linkages for leaks and excess play. **Repair Group 320**				
Inspect brake system. Check brake calipers, rotors, and brake pad thickness. Inspect for damaged hoses and lines, leaks or damage. Check hand brake, adjust cable if necessary. **Repair Group 340**				
Check and adjust tire pressures, including spare	*			
Body and interior maintenance				
Check operation of exterior and interior lights, including glove box light, engine compartment light, trunk light, instrument panel lights, horns, headlight flasher and dimmer switch. Check headlight and driving light aiming. **6 Electrical System**				
Check condition and function of seat belts. **Repair Group 720**				
Check windshield washer fluid level and concentration, add as necessary. Check operation of washer system. Check condition of wiper blades. **Repair Group 611**		*		
Road Test				
Check braking performance, steering, heating and ventilation, manual or automatic transmission, and mirrors				

Table b. Inspection I Service

Maintenance item	Tools required	New parts required	Warm engine required	Dealer service recommended
Engine compartment maintenance				
Check and adjust valve clearance (M20 and M30 engine). **Repair Group 116**	*			
Change oil and oil filter.	*	*	*	
Check brake/clutch fluid level		*		
Check battery acid level and correct as necessary. **Repair Group 121**				
Check engine coolant level and anti-freeze protection and add as necessary. Inspect for cooling system leaks **Repair Group 170**		*		
Lubricate throttle linkage				
Under car maintenance				
Check transmission for external leaks				
Check manual transmission oil level and add as necessary **Repair Group 230**	*	*		
Check final drive lubricant and add as necessary. **Repair Group 331**	*	*		
Check fuel tank, fuel lines, and all connections for leaks				
Inspect exhaust system. **Repair Group 180**				
Check steering box and steering linkages. Check power steering system for leaks. Check fluid level. **Repair Group 320**		*		*
Inspect brake system for damaged hoses and lines, leaks or damage. Remove calipers and check brake pad wear. Check brake rotors for scoring damage. **Repair Group 340**	*			
Check parking brake operation, adjust cable if necessary. **Repair Group 340**	*			
Inspect front and rear suspension, including wheel bearings, for play. **Repair Group 320/330**				*
Inspect wheels and tires, including spare, check tire pressure and condition				
Check hydraulic fluid level for Level Control System (LAD), if applicable. See **Repair Group 330**		*		
Body and Interior Maintenance				
Lubricate door hinges and hood latch, hood hinges				
Check headlight and driving light aiming and adjust as necessary.	*			*
Check operation of headlights, parking lights, back-up lights, license plate lights, interior lights, glove box light, engine compartment light, trunk light, instrument panel lights, turn signals, emergency flashers, stop lights, horns, headlight flasher and dimmer switch				
Check active check control panel for faults. **6 Electrical System**				
Check function of air conditioning. Check refrigerant charge at sight glass, where applicable. Tighten A/C compressor mounting bolts. **Repair Group 640**	*			
Check function of seat belts. **Repair Group 720**				
Check windshield washer fluid level and concentration, add as necessary. Check operation of washer system. Check condition of wiper blades **Repair Group 611**		*		
Tighten nuts and bolts for door locks and striker plates				
Replace intake dust/pollen micro-filter in A/C unit. **Repair Group 640**	*	*		
Replace batteries for alarm/remote control in master key (1995 models)		*		
Road Test				
Check braking performance, steering, HVAC, manual or automatic transmission, and mirrors				

Table c. Inspection II Service

Maintenance item	Tools required	New parts required	Warm engine required	Dealer service recommended
Engine compartment maintenance				
Check and adjust valve clearance (M20 and M30 engine). **Repair Group 116**	*	*		
Replace camshaft timing belt every other Inspection II or every 50K miles. **Repair Group 118**	*	*		*
Inspect V-belt /Poly-ribbed drive condition. Check V-belt tension (M20/M30 engines).	*			
Lubricate throttle linkage.				
Change air filter.	*	*		
Change oil and oil filter.	*	*	*	
Check brake/clutch fluid level.		*		
Check battery acid level and correct as necessary. **Repair Group 121**				
Check engine coolant level and anti-freeze protection and add as necessary. Inspect for cooling system leaks. **Repair Group 170**	*			
Under car maintenance				
Change automatic transmission fluid (except 540i models). **Repair Group 240**				
Change manual transmission oil. **Repair Group 230**	*	*	*	
Check clutch plate for wear. **Repair Group 210**	*			
Check drive axle boots for leaks. **Repair Group 330**				
Change final drive fluid (1995 models: change synthetic oil every 2nd Inspection II).	*		*	
Replace fuel filter.	*	*		
Replace air filter element.	*	*		
Check fuel tank, fuel lines, and all connections for leaks.				
Inspect exhaust system. **Repair Group 180**				
Check steering box and steering linkages. Check power steering system for leaks. Check fluid level. **Repair Group 320**		*		*
Inspect brake system for damaged hoses and lines, leaks or damage. Remove calipers and check brake pad wear. Check brake rotors for scoring damage. **Repair Group 340**				
Check parking brake operation, adjust cable if necessary. Check thickness of parking brake linings. **Repair Group 340**	*			
Inspect front and rear suspension, including front and rear wheel bearings, for play. **Repair Group 320/330**				*
Inspect wheels and tires, including spare, check tire pressure and condition.	*			
Cars with traction control ASC+T: replace ASC+T filter.		*		
Check hydraulic fluid level for Level Control System (LAD), if applicable. See **Repair Group 330**		*		
Body and Interior Maintenance				
Lubricate door hinges and hood latch, hood hinges.				
Check headlight and driving light aiming and adjust as necessary.	*			*
Check operation of headlights, parking lights, back-up lights, license plate lights, interior lights, glove box light, engine compartment light, trunk light, instrument panel lights, turn signals, emergency flashers, stop lights, horns, headlight flasher and dimmer switch.				
Check active check control panel for faults. **6 Electrical System**				

Continued on next page

Table c. Inspection II Service (continued)

Maintenance item	Tools required	New parts required	Warm engine required	Dealer service recommended
Body and Interior Maintenance (cont.)				
Check function of air conditioning. Check refrigerant charge at sight glass, where applicable. Tighten A/C compressor mounting bolts. **Repair Group 640**	*	*		
Check function of seat belts. **Repair Group 320**				
Check windshield washer fluid level and concentration, add as necessary. Check operation of washer system. Check condition of wiper blades **Repair Group 611**		*		
Tighten nuts and bolts for door locks and striker plates.	*			
Replace intake dust/pollen micro-filter in A/C unit. **Repair Group 640**	*	*		
Replace batteries for alarm/remote control in master key (1995 models).		*		
Check ground connection of SRS (airbag) front sensor to body, if applicable. **Repair Group 721**	*			*
Road Test				
Check braking performance, steering, HVAC, manual or automatic transmission, and mirrors				

Table d. Scheduled Maintenance —Time/Mileage Intervals

Maintenance item	every 12 months	every 24 months	every 48 months	every 50,000 miles	every 60,000 miles	every 100,000 miles	New parts required	Dealer service recommended
Replace oxygen sensor. **Repair Group 180**								
1989–1994 models					*		*	
1995 models						*	*	
Flush and replace brake fluid/clutch fluid. **Repair Group 340**		*					*	
Replace camshaft drive belt (M20 engine). **Repair Group 118**			*	*			*	*
Drain and flush cooling system and replace coolant (every 36 months on 1995 cars). **Repair Group 170**		*					*	
Anti-corrosion warranty inspection.	*							*

NOTE —

On 1991 and later models, a clock symbol will illuminate in the instrument cluster based on elapsed time. This symbol indicates that an annual inspection is due. See your BMW dealer for more information.

FLUID AND LUBRICANT SPECIFICATIONS

The fluids and lubricants specified by BMW are listed in **Table e.** Shown below is engine oil viscosity (SAE grade) vs. operating temperature range for the BMW engines covered in this manual.

Engine Oil Viscosity Requirements vs. Temperature

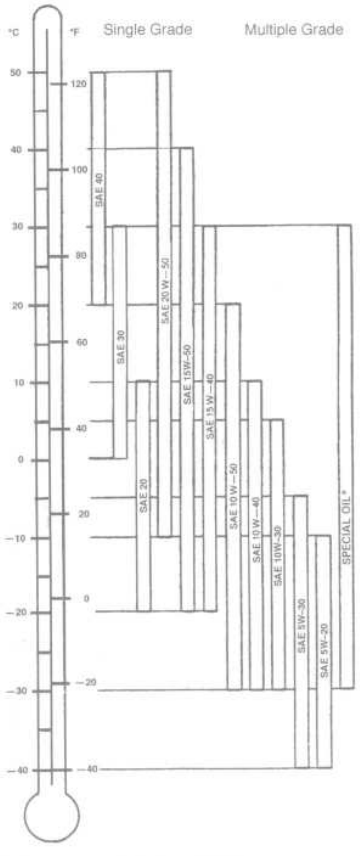

WARNING —

The use of fluids that do not meet BMW's specifications may impair performance and reliability, and may void warranty coverage.

Table e. Fluids and Lubricants

Fluid	Approximate capacity	Specification
Engine oil with filter change		
525i M20 engine M50 engine	 4.25 l (5.0 US qt.) 5.75 l (6.1 US qt.)	API service SG or SH
535i	5.75 l (6.1 US qt.)	
530i/540i (M60)	7.50 l (8.0 US qt.)	
Manual transmission oil	Gear oil or ATF, depending on application and model year. See **230 Manual Transmission**	
Automatic transmission fluid (ATF) (drain and fill)		
525i 535i 530i	3.0 l (3.2 US qt.)	Dexron II® ATF
540i	5.5 l (5.8 US qt.) lifetime fill	Shell LA 2634 ATF fluid or contact BMW dealer
Final drive (drain and fill)		
525i 535i 530i	1.7 l (1.8 US qt.)	Special oil, see **331 Final Drive**
540i	1.9 l (2.0 US qt.)	Special oil, see **331 Final Drive**
Power steering fluid		
All models	permanently sealed no drain plug	Dexron II® ATF or Hydraulic oil CHF 7.1 (Reservoir tank is labeled with oil type)
Brake fluid		
All models	–	SAE Dot 4
Engine coolant		
525i M20 engine M50 engine	 10.5 l (11.0 US qt.) 10.5 l (11.0 US qt.)	 50% BMW antifreeze/ 50% water
535i 530i, 540i	12.0 L (12.7 US qt.) 12.5 l (13.0 US qt.)	50% BMW antifreeze/ 50% water

CAUTION —

Multi-viscosity engine oils should not be used in the manual transmission. Use of such an oil could shorten the service life of the transmission.

NOTE —

Changing the manual transmission gear oil to a less viscous engine oil (lower SAE viscosity rating) or ATF may increase the level of gear noise in the passenger compartment.

ENGINE OIL SERVICE

The OIL SERVICE light in the service interval indicator should be the basic guide to scheduling oil changes. The oil service light should come on at or before 7,500 miles. If the car is used primarily for short trips in slow moving traffic, or routinely operated aggressively, the oil service light should come on earlier.

Engine oil and filter, changing

NOTE —

There are two different types of oil filter mountings, depending on model. On 525i models with the M20 engine, the filter is the spin-on type. On all other models, a cartridge type filter is used. The procedure below covers both types of filters.

1. Run engine for a few minutes to warm engine and then turn engine off.

2. With car on level ground, place a drain pan under oil drain plug. See Fig. 3.



0011911

Fig. 3. Engine oil drain plug (**arrow**) in oil sump.

NOTE —

The car will not need to be raised if a shallow drain pan is used.

3. Using a socket or box wrench, loosen drain plug from bottom of oil sump. By hand, remove plug and let oil drain into pan.

CAUTION —

- *Pull the loose plug away from the hole quickly to avoid being burned by the hot oil. It will run out quickly when the plug is removed.*
- *Use gloves to protect your hands.*

4. When oil flow has diminished to an occasional drip, reinstall drain plug with a new metal sealing washer and tighten plug.

Tightening Torques

- Engine oil drain plug to oil sump
  - M12 bolt. . . . . 25 Nm (18 ft-lb)
  - M22 bolt. . . . . 60 Nm (44 ft-lb)

5. Remove oil filter:

- On M20 engines, position drain pan directly under the oil filter and loosen spin-on filter by turning clockwise.
- On all engines except M20 engine, loosen oil filter cover or oil filter cover mounting bolt.Install new oil filter:

- On M20 engines, wipe oil filter mounting flange clean. Lubricate rubber gasket of new oil filter with light coating of clean engine oil. Install filter by hand until gasket contacts mounting flange, then turn filter another $^1/_2$ turn.
- On all engines except M20 engine, remove old O-ring(s) from cover and from end of bolt, as applicable. Lubricate and install new O-rings in filter cover and on filter bolt (M50,M30 engines only). Install new filter cartridge and cover. See Fig. 4.

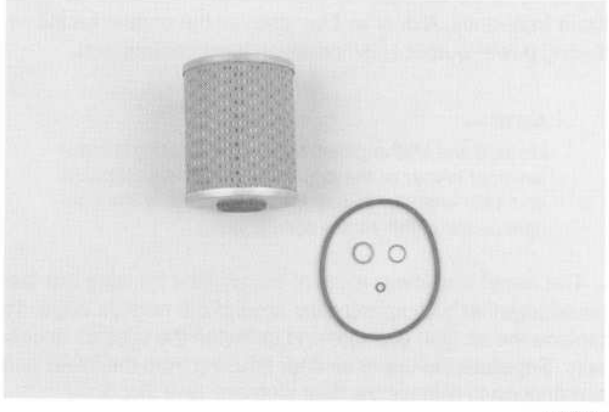

0011912

Fig. 4. BMW oil cartridge filter for M50 engine. When purchasing original equipment filter, sealing rings and O-rings are normally included.

Tightening Torque

- Oil filter cover to oil filter housing
  - M10 or M 12 bolt . . . . . 33 Nm (24 ft-lb)
  - screw-on cover . . . . . 25 Nm (18 ft-lb)

CAUTION —

Overtightening the oil filter will make the next change much more difficult, and may deform the gasket, causing leaks.

6. Refill crankcase with oil. Check oil level when finished adding oil. Oil specifications are found under **Fluid and Lubricant Specifications**.

7. Start engine and check that oil pressure warning light immediately goes out. Allow engine to run for a few minutes to circulate new oil. Check for leaks at drain plug and oil filter. Stop engine and recheck oil level.

> ***CAUTION —***
> - *Dispose of used oil properly. Use tight-sealing containers and mark them clearly. Check with the place of purchase about disposal.*
> - *If the oil pressure warning light does not immediately go out after the engine is started, quickly turn the engine off. Loosen the oil filter or filter cover slightly. Restart the engine. As soon as oil begins to run out of the filter or filter cover, turn the engine off and tighten the filter or cover. This will release any trapped air that is blocking oil flow.*

ENGINE COMPARTMENT MAINTENANCE

Air filter element, replacing

The specified maintenance intervals for replacing the air filter element are based on normal use. If the car is operated primarily in dusty conditions, the air filter should be serviced more frequently. A dirty air filter starves the engine for air, reducing power output and increasing fuel consumption.

> ***NOTE —***
> *On M20 and M50 engines, the air filter housing is in the left front corner of the engine compartment. On M30 and M60 engines, the air filter housing is in the front right corner of the engine compartment.*

The upper and lower parts of the air filter housing are fastened together with spring clips around the outside edge. To replace the air filter element and unfasten the clips as necessary. Separate the upper air filter housing from the lower part just enough to remove the filter element. See Fig. 5.

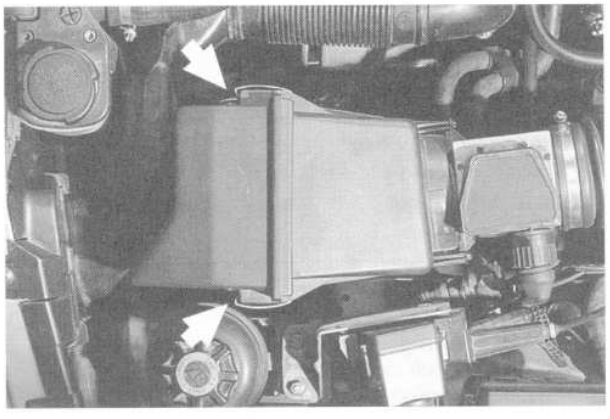

Fig. 5. Air filter housing in front left (driver's) side of M50 engine compartment. Unclip spring clips (**arrows**) to remove air filter.

Take note of the installed position of the filter. Wipe clean the inside of the air filter housing using a lint-free cloth and install the new filter. Reinstall the upper air filter housing, making sure that the two halves are mated correctly. Refasten the spring-clips and tighten the mounting nuts. See Fig. 6.

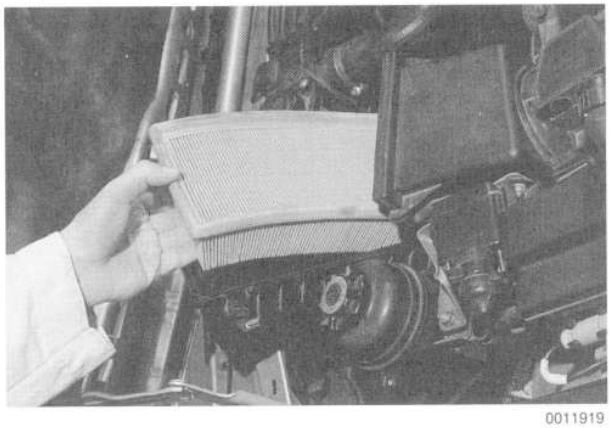

0011919

Fig. 6. Air filter being removed from air filter housing. Air filter housing will vary slightly between models.

> ***WARNING —***
> *When reinstalling a used air filter element, reinstall the filter in the same position that it was in before removal. Reversed installation will allow accumulated dirt to be drawn into the engine.*

Spark plugs, replacing

High temperature and high-voltage sparks eventually wear out the spark plug electrodes, and the spark plugs must be replaced.

On M20 and M30 engines, gently remove the spark plug wire by pulling on the protective boot. Blow or brush away any dirt from around the base of the plug to prevent it from entering the engine when the plug is removed.

On M50 and M60 engines, individual ignition coils are mounted above each spark plug. To access the plugs, the ignition coils must first be removed as described in **120 Ignition System—DME**.

> ***CAUTION —***
> *Spark plugs should be replaced one at a time so that the spark plug wires do not get mixed up. If all of the wires need to be removed together, label each wire so that they can be reinstalled on the correct spark plug.*

Use a 13/16 in. or 5/8 in. spark plug socket to remove spark plugs. The correct spark plugs for the different engines covered by this manual are listed in **Table i**. Use a spark plug gap gauge to check the gap, if applicable. If necessary, bend the outer electrode slightly to adjust the gap to meet the specification. Do not bend or file the center electrode.

Table f. Spark Plug Applications

Model/ Engine	Spark plug	Electrode gap
	Bosch	
525i/M20	W8 LCR/W8 LPR*	0.7-0.8 mm (.028-.032 in.)
525i/M50	F7 L DCR	Non-adjustable
535i/M30	W8 LCR/W8 LPR*	0.7-0.8 mm (.028-.032 in.)
530i/M60	F7 L DCR	Non-adjustable
540i/M60	F7 L DCR	Non-adjustable

Lightly lubricate the new spark plug threads with a little oil. Thread the plugs into the cylinder head by hand to prevent cross-threading. Torque the spark plugs.

Tightening Torque

- Spark plug to cylinder head . . . . . 30 Nm (22 ft-lb)

NOTE —

Abnormal spark plug condition could also result from spark plugs of the wrong specification. Check replacement plugs carefully and follow the spark plug manufacturer's recommendations.

Distributor cap/rotor/spark plug wires, replacing

The distributor cap, rotor, and spark plug wires deliver high-voltage spark to the spark plugs. They are subject to insulation breakdown, corrosion fouling, and electrode wear and damage. The components should be inspected and replaced as necessary at the intervals listed under **Maintenance Tables** to ensure maximum engine efficiency. Guidelines for visual inspection and testing, and instructions for replacement are found in **120 Ignition System—DME**.

Fuel filter, replacing

The filter should be replaced at the specified interval. The fuel filter is located beneath the right rear of the car, just in front of the gas tank. See Fig. 7.

NOTE —

Some eight cylinder models (cars built from March 1993) are equipped with two fuel filters.

When replacing the fuel filter, disconnect the battery negative (–) cable and clamp the filter inlet and outlet hoses to lessen fuel spillage. Loosen the clamping bracket and the two hose clamps on either end of the filter. Note the arrow or markings indicating direction of flow on the new filter. Install the filter and use new hose clamps.

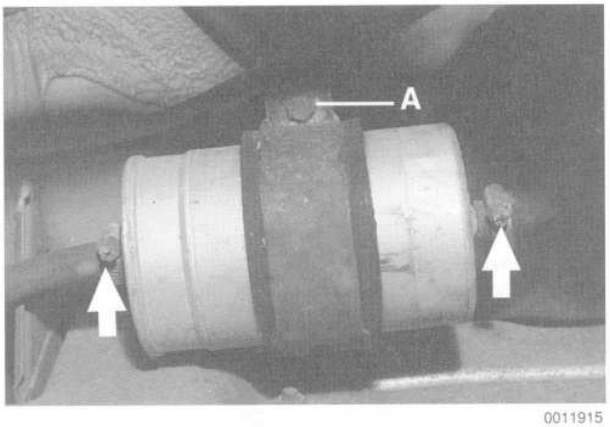

0011915

Fig. 7. Fuel filter beneath car near right rear wheel. Direction of flow is indicated on filter housing. Loosen clamping bracket at filter center (**A**) and hose clamps (**arrows**). Replace hose clamps.

WARNING —

Fuel will be spilled when the filter is removed. Do not smoke or work near heaters or other fire hazards. Keep a fire extinguisher handy.

CAUTION —

Clean thoroughly around the filter connections before removing. Make sure no dirt gets into the fuel lines.

Valve clearance, adjusting (M20/M30 engines)

1989–1990 525i models and all 535i models require periodic valve clearance checking and adjusting. The complete valve adjustment procedure is covered in **116 Cylinder Head and Valvetrain**.

Camshaft drive belt, replacing (M20 engine)

1989 and 1990 525i models use an overhead camshaft that is actuated by a toothed rubber drive belt. See Fig. 8. Due to belt composition and high under-hood temperatures, the belt is subject to wear. BMW recommends that the belt be replaced at least every 50,000 miles, every four years, or anytime belt tension is relieved. See **118 Camshaft Timing Belt** for belt replacement procedures.

CAUTION —

If the camshaft drive belt fails with the engine running, the pistons will contact and bend the valves.

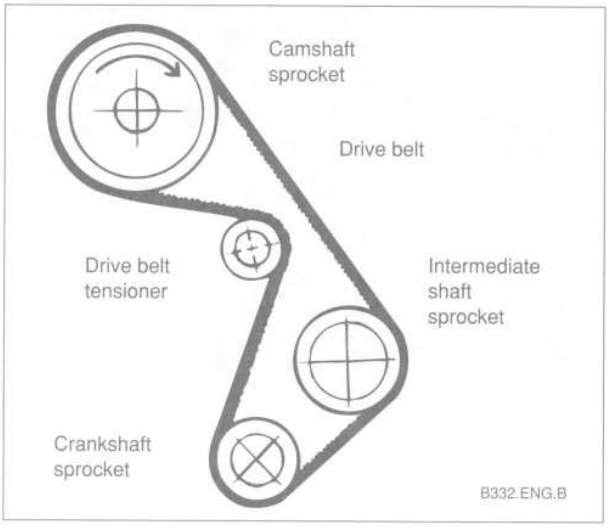

Fig. 8. Camshaft drive belt configuration on M20 engine.

Battery maintenance

Simple maintenance of the battery and its terminal connections will ensure maximum starting performance, especially in colder temperatures. For a more detailed discussion of the battery and charging system, see **121 Battery, Starter, Alternator**.

NOTE —

The battery is mounted in one of two places, depending on models and model year. On most early cars, the battery is in the front right corner of the engine compartment. On later cars, the battery is mounted beneath the rear seat. A secure battery hold-down is important in order to prevent vibrations and road shock from damaging the plates.

Battery cable clamps should be tight. The terminals, the cable clamps, and the battery case should be clean and free of white deposits. Even a thin layer of dust containing conductive acid salts can cause battery discharge.

To remove battery corrosion, begin by disconnecting the cables. Disconnect the negative (–) cable first. Clean the terminal posts and the cable clamps with a wire brush. Clean the main chassis ground terminal next to the battery.

Corrosion can be washed away with a baking soda and water solution that will neutralize the acid. Apply the solution carefully, though, since it will also neutralize the acid inside the battery. Reconnect the cable clamps, positive (+) cable first. Lightly coat the outside of the terminals, hold down screw, and clamps with petroleum jelly, grease, or a commercial battery terminal corrosion inhibitor.

WARNING —

- *Battery acid is caustic and dangerous. Take care to keep it from contacting eyes, skin, or clothing. Wear eye protection. Extinguish all smoking materials and do not work near any open flames.*
- *Disconnecting the battery cables with the engine running, or reconnecting the cables to the incorrect posts will damage the electrical system.*
- *Be sure to have the radio code on hand before disconnecting battery.*

Battery electrolyte should be maintained at the correct level just above the battery plates and their separators. The correct level is approximately 5 mm (1/4 in.) above the top of battery plates or to the top of the indicator marks (if applicable). The battery plates and the indicator marks can be seen once the filler caps are removed. If the electrolyte level is low, replenish it by adding distilled water only.

NOTE —

Always disconnect the negative (–) cable first, and connect it last.

Throttle housing and linkage, lubricating

The linkage at the throttle housing should be lubricated at the intervals described under **Maintenance Tables.** Use a general purpose oil on the joints and bearings of the linkage. Use a multipurpose grease on the bearing points of the throttle plate.

V-belts, checking and replacing (M20, M30 engines)

V-belts should be inspected during regular maintenance intervals. Incorrect tension can decrease the life of the belt and the component it drives. Inspect belts with the engine off. Twist the belt to inspect its sidewalls and bottom. Belt structural damage, glazed or shiny sidewalls caused by a loose belt, or separation caused by oil contamination are all reasons to replace a belt. V-belt faults are illustrated in Fig. 9.

Belt squealing is normally caused by loose belt tension. Loud squealing may only be corrected by belt replacement. Belt dressings should not be used to correct the problem.

The V-belt tension is adjusted through a toothed-rack mechanism. Adjust V-belts by first loosening all of the mounting nuts/bolts until the unit pivots freely. Use a torque wrench and a crowfoot wrench to turn the tensioning gear bolt. Hold the wrench steady and tighten the locknut on the rear of the tensioning gear bolt. Tighten all other mounting nuts.

NOTE —

For the most accurate check, V-belt tension should be checked using a V-belt tension gauge.

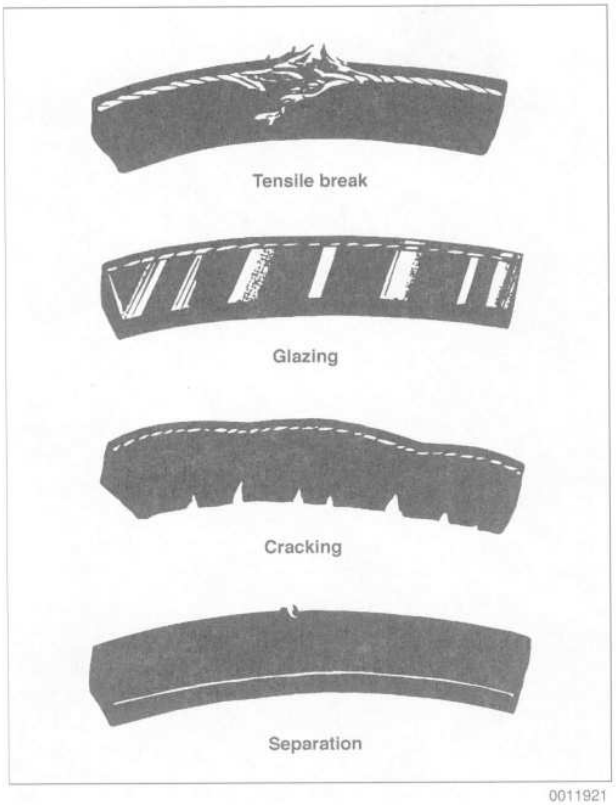

Fig. 9. Examples of V-belt failure. Courtesy of Gates Rubber Inc.

Tightening Torques

- Tensioning gear (alternator belt tensioning) . . . . . 7 Nm (62 in-lb)
- Tensioning gear (power steering belt tensioning) . . . . . 8 to 8.5 Nm (71 to 75 in-lb)
- Tensioning gear locking nut . . . . . 24 Nm (18 ft-lb)

Replacement of the V-belts every four years is recommended. Loosen the mounting bolts and adjust until the belt tension is as loose as possible. Remove the belt by slipping it over the pulleys. In some cases it may be necessary to remove one V-belt to get to another. Cross section and length determine belt size. Use the old belt for comparison, or make sure that the new belt fits into the pulley groove. See Fig. 10.

NOTE —
When belts are replaced with new ones, store the old set in the luggage compartment for emergency use.

When installing a new belt, gently pry it over the pulleys. Too much force may damage the belt or the accessory. Tension the belt(s), run the engine for a few minutes (at least 1500 rpm), then recheck the belt tension.

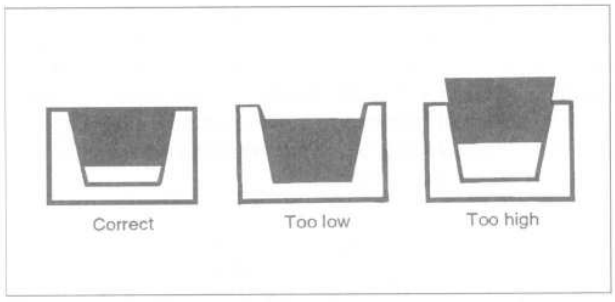

Fig. 10. Cross-section of correct V-belt position in pulley. Courtesy of Gates Rubber Inc.

CAUTION —
Do not over tighten the V-belts. Overtightening will cause shaft bearings to fail prematurely

Poly-ribbed belts, checking and replacing (M50 and M60 engines)

The automatic-tensioning poly-ribbed belt(s) should be inspected during regular maintenance intervals. Inspect the belt with the engine off. Twist the belt to inspect its sidewalls and bottom. Belt structural damage, glazed or shiny contact surfaces, cracking, or oil contamination are all reasons to replace a belt.

To replace the belt on M50 motors, first pry out the cover from the front of the belt tensioner. Then use an 8mm allen socket to relieve the tension on the belt. See Fig. 11. Install the new belt with the tensioner in the released position. Install the dust cap to the tensioner once the belt is installed.



Fig. 11. Poly-ribbed drive belt being removed on M50 engine. Turn 8 mm hex wrench clockwise to relieve belt tension and then slip belt off pulleys.

To replace the poly-ribbed belts on M60 motors, loosen the mounting nuts on the belt tensioner. See Fig. 12.Then use an open end wrench to rotate the tensioner counterclockwise, releasing belt tension. Tighten the tensioner mounting nuts to hold the tensioner in position. Remove the belt. Install the new belt and then loosen the tensioner mounting nuts. Tighten the nuts once the belt is tensioned.

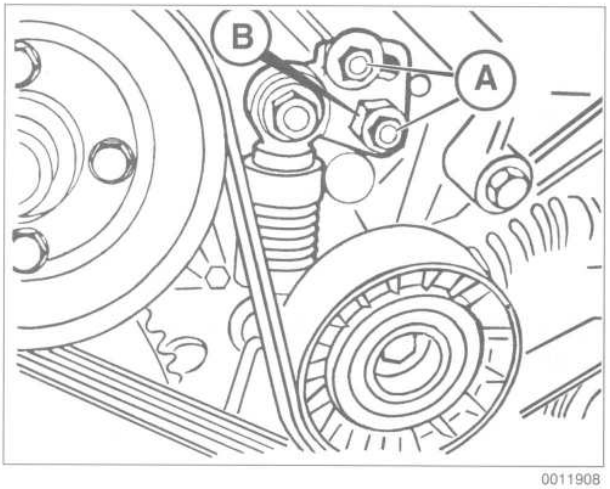

0011908

Fig. 12. Drive belt tensioner on M60 engine. To relieve belt tension, loosen nuts (**A**) and turn hex (**B**) counterclockwise. Tighten nuts to hold tensioner in position.

Cooling system maintenance

Cooling system maintenance consists of maintaining the coolant and inspecting coolant hoses. Because the coolant's anti-corrosion and anti-freeze additives gradually lose their effectiveness, replacement of the coolant every 2-3 years is recommended. As a preventive measure, replacement of the cooling system hoses every 4 years is also recommended.

> ***CAUTION —***
> *Use only BMW-approved long life anti-freeze when filling the cooling system. Use of anti-freeze containing phosphates or a high silicate content is considered to be harmful to the cooling system.*

A translucent expansion tank, either on the left side of the radiator or in the rear of the engine compartment, provides easy monitoring of coolant level. Because the expansion tank is translucent, the coolant level can be checked visually without opening the system.

Always check the coolant level with the engine cold. The coolant level should be at the maximum mark on the expansion tank. See Fig. 13.

Coolant hose connections should be tight and dry. Coolant seepage indicates either that the hose clamp is loose, that the hose is damaged, or that the connection is dirty or corroded. Dried coolant has a chalky appearance. Hoses should be firm and springy. Replace any hose that is cracked, that has become soft and limp, or has been contaminated by oil. See Fig. 14.

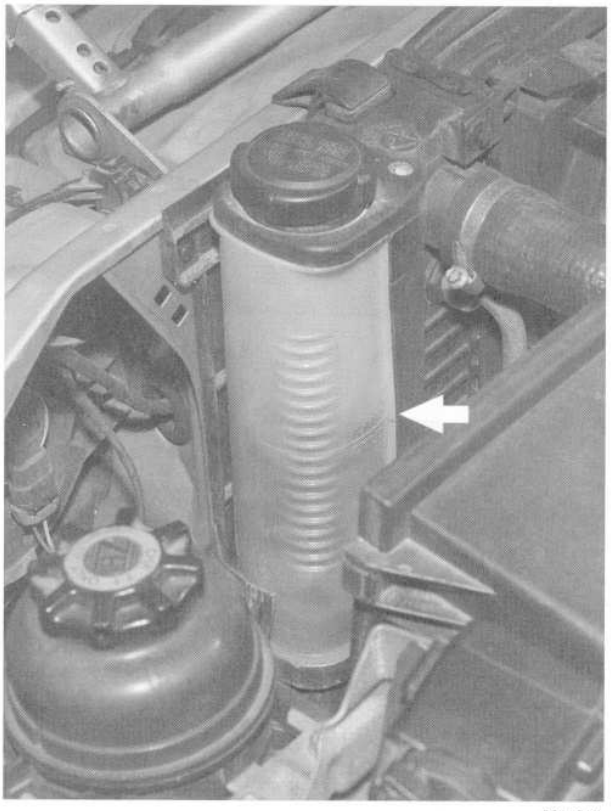

0011917

Fig. 13. Fill mark on coolant expansion tank on radiator. Coolant level should be at "cold" mark when engine is cold.

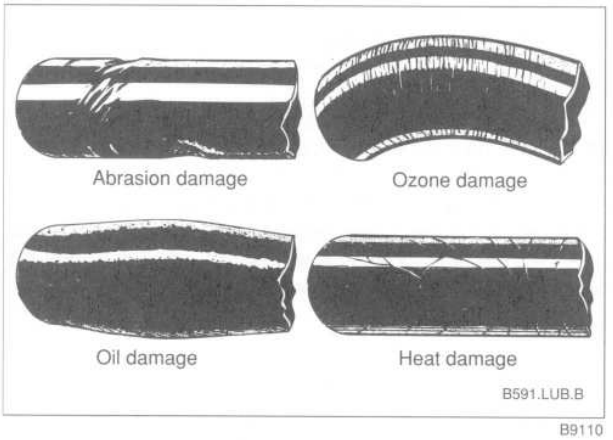

B9110

Fig. 14. Examples of damage to coolant hoses. Any of conditions shown is cause for replacement. Courtesy of Gates Rubber Inc.

Power steering fluid level, checking

Check the power steering fluid level in the fluid reservoir, just behind the fuse/relay panel. Park the car on level ground with the engine off.

NOTE —
The power steering system is filled with either ATF or CHF 7.1 hydraulic oil. The reservoir is marked with the type of oil used.

The fluid level is correct if it is between the **MAX** and **MIN** marks on the dipstick. See Fig. 15. If the level is below the **MIN** mark, start the engine and add fluid to the reservoir to bring the level up. Stop the engine and recheck the level. Hand-tighten the reservoir cap.

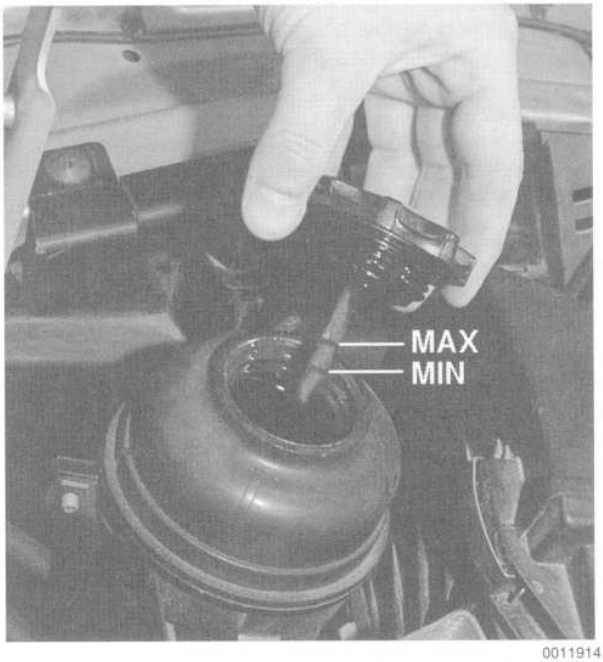

0011914

Fig. 15. Power steering fluid dipstick showing **MIN** and **MAX** marks.

Brake/clutch fluid level, checking

The level of the brake fluid will drop slightly as the brakes wear. Check the fluid level is between the MIN and MAX marks on the brake fluid reservoir. See Fig. 15. When filling the reservoir, use only new brake fluid from previously unopened containers. See **Fluid and Lubricant Specifications**.

NOTE —
- *The brake fluid also serves as the hydraulic fluid for the clutch on cars with manual transmission.*
- *Low fluid level in the brake fluid reservoir may be due to leaks in the brake system or in the hydraulic clutch.*



0011918

Fig. 16. Level indicators on brake fluid reservoir (**arrows**). Correct level is between **MIN** and **MAX** marks.

Oxygen sensor, replacing

The oxygen sensor monitors engine combustion efficiency by measuring the oxygen content of the exhaust gasses. The output signal from the sensor is used to precisely control fuel delivery. Any problems with the oxygen sensor will directly affect exhaust emissions and the way the engine runs.

The sensor is mounted in the exhaust pipe near the catalytic convertor. See Fig. 17. For more information on testing the oxygen sensor system, see **130 Fuel injection–DME**.

WARNING —
Allow exhaust system to cool thoroughly.

1. To replace oxygen sensor, detach electrical harness connector, then unscrew sensor from exhaust pipe

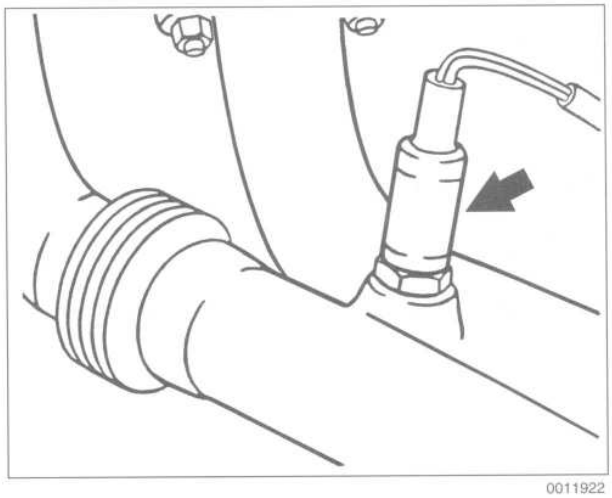

0011922

Fig. 17. Oxygen sensor (**arrow**) is threaded into front exhaust pipe ahead of catalytic converter.

Tightening Torque

- Oxygen sensor to exhaust system . . . . . 55 ± 5 Nm (40 ±4 ft-lb)

NOTE —

Special sockets for replacing the oxygen sensor are available from most automotive parts stores. The socket has a groove cut down one side to allow the sensor to be installed without damaging the wire harness. See **010 Fundamentals for the Do-it-yourself Owner** *for information on sources.*

UNDER-CAR MAINTENANCE

Tires, checking inflation pressure

Correct tire inflation pressures are important to handling and stability, fuel economy, and tire wear. Tire pressures change with temperature. Pressures should be checked often during seasonal temperature changes. Correct inflation pressures can be found on the driver's door pillar and in the owner's manual. Note that tire pressures should be higher when the car is more heavily loaded.

WARNING —

Do not inflate any tire to a higher pressure than the tire's maximum inflation pressure listed on the sidewall. Use care when adding air to warm tires. Warm tire pressures can increase as much as 4 psi (0.3 bar) over their cold pressures.

Tires, rotating

BMW does not recommend tire rotation. Owing to the car's suspension design, the front tires begin to wear first at the outer shoulder and the rear tires begin to wear first at the middle of the tread or inner shoulder. Rotating the tires may adversely affect road handling and tire grip.

NOTE —

The main purpose of tire rotation is to promote even wear and maximum tire life. Tire life may be decreased slightly if the tires are not rotated.

Wheels, aligning

BMW recommends checking the front and rear alignment once a year and whenever new tires are installed. See **320 Steering and wheel alignment** for a more detailed discussion of alignment requirements and specifications.

Brake system, inspecting

Routine maintenance of the brake system includes maintaining an adequate level of brake fluid in the reservoir, checking brake pads for wear, checking hand brake function, and inspecting the system for fluid leaks or other damage.

WARNING —

- *Friction materials such as brake linings may contain asbestos fibers. Do not create dust by grinding, sanding, or cleaning the pads with compressed air. Avoid breathing asbestos fibers and asbestos dust, as it may result in serious diseases such as asbestosis and cancer, or in death.*
- *Brake fluid is poisonous. Do not siphon brake fluid by mouth. Wear gloves when working with brake fluid or brake pads to prevent contamination of cuts.*

Brake hoses and lines, inspecting

Check that all brake hoses are correctly routed to avoid chafing or kinking. Inspect unions and brake calipers for signs of fluid leaks. Inspect rigid lines for corrosion, dents, or other damage. Inspect flexible hoses for cracking. Replace faulty hoses or lines as described in **340 Brakes**.

WARNING —

Incorrect installation or overtightening hoses, lines, and unions may cause chafing or leakage. This can lead to partial or complete brake system failure.

Brake pad/rotor wear, checking

Although the cars covered by this manual are equipped with a brake pad warning system, the system only monitors one wheel per axle. There can be slight variations in brake pad wear at each wheel, so brake pad thickness should be checked whenever the wheels are off or brake work is being done.

The brake caliper should be removed to properly inspect the brake pads and the rotors. Brake caliper removal and installation procedures are given in **340 Brakes**. See Fig. 18.

Brake Pad Lining Minimum Thickness (Dimension A)

- Front and rear disc brake pads. . . . . .2.0 mm (0.08 in)

NOTE —

For parking brake lining wear, see ***Parking Brake, checking*** *below.*

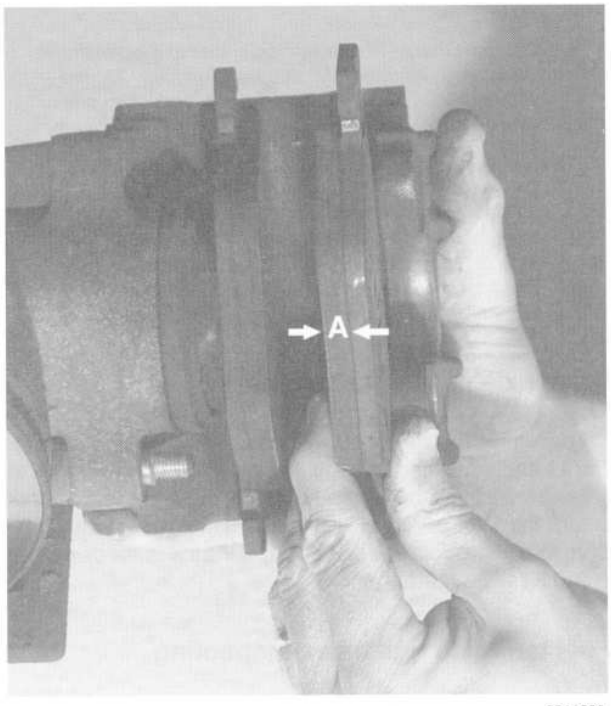

0011920

Fig. 18. Disc brake caliper removed to inspect brake pad thickness. Minimum brake pad thickness shown by dimension **A**.

Brake fluid, replacing

BMW strictly recommends replacing the brake fluid every year. This will help protect against corrosion and the effects of moisture in the fluid. See **340 Brakes** for brake fluid flushing procedures.

Parking brake, checking

The parking brake system is independent of the main braking system and may require periodic adjustment depending on use. Adjust the parking brake if the brake lever can be pulled up more than 8 clicks on the ratchet mechanism. Check that the cable moves freely. A complete description of the parking brake and parking brake adjustment can be found in **340 Brakes**.

NOTE —

The parking brake may lose some of its effectiveness over time if it is not used frequently. This is due to corrosion build-up on the parking brake drum. To remove corrosion, apply the parking brake just until it begins to grip, then pull the lever up one more stop (click). Drive the car approximately 400 meters (1,300 ft.) and release the brake. To recheck the adjustment of the parking brake see **340 Brakes**.

Exhaust system, inspecting

Exhaust system life varies widely according to driving habits and environmental conditions. If short-distance driving predominates, the moisture and condensation in the system will not fully dry out. This will lead to early corrosion damage and more frequent replacement.

Scheduled maintenance of the exhaust system is limited to inspection. Check for restrictions due to dents or kinks. Check for weakness or perforation due to rust. Check to see that all the hangers are in place and properly supporting the system and that the system does not strike the body. Alignment of the system and the location of the hangers are described in **180 Exhaust System**.

Manual Transmission Service

Manual transmission service consists of inspecting for leaks, checking and changing the gear oil, checking the clutch fluid level, and checking the clutch disc for wear.

Evidence of transmission leaks is most likely to be seen around the drive shaft mounting flange, and at the bottom of the bellhousing between the transmission and the engine. For more information on identifying oil leaks and their causes, see **230 Manual Transmission** and **210 Clutch**.

Manual transmission oil, checking and filling

BMW recommends checking the manual transmission oil level and changing the oil at specified intervals. Check and fill the transmission with the car on a level surface. Transmission oil level checking and oil replacement procedures are covered in **230 Manual Transmission**.

Automatic transmission service

Many different automatic transmissions are used in the cars covered by this manual, depending on engine and model year. Some early transmissions are equipped with a dipstick, while most later transmissions are not. On automatic transmissions not equipped with a dipstick, checking the ATF level is an involved procedure that requires measuring and maintaining a specified ATF temperature during the checking procedure.

NOTE —

Some automatic transmissions use a special ATF oil that does not require changing for the life of the transmission.

For complete ATF service, including checking ATF level and ATF filter replacement procedures, see **240 Automatic Transmission**.

Front suspension and steering linkages, inspecting

Inspection of the front suspension and steering includes a check of all moving parts for wear and excessive play. Also inspect the rubber seals and boots for cracks or tears that could allow the entry of dirt, water, and other contaminants. See **310 Front Suspension**.

Rear suspension, inspecting

Final drive and rear drive axle service consists of checking and changing the gear oil, inspecting for leaks, and checking the rear drive axle rubber boots for damage.

The areas where leaks are most likely to occur are around the drive shaft and drive axle mounting flanges. For more information on identifying oil leaks and their causes, see **330 Rear Suspension** and **331 Final Drive**.

Final drive oil level, checking

Check the lubricant level with the car level. Remove the oil filler plug. The level is correct when the fluid just reaches the edge of the filler hole. See Fig. 19. Install and tighten the oil filler plug when the oil level is correct.

Oil specifications vary depending on type of final drive unit installed. See **331 Final Drive** for more information.

Tightening Torque

- Final drive filler plug to final drive housing . . . . . 70 Nm (52 ft-lb)

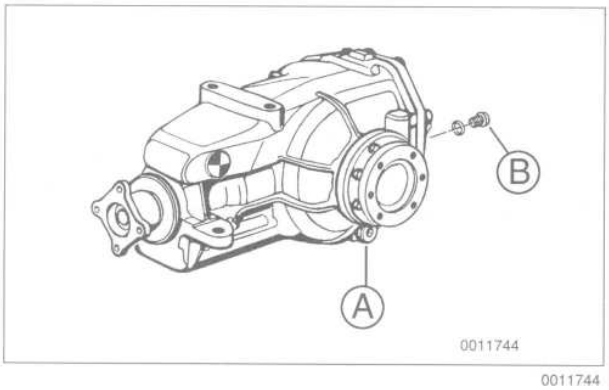

0011744

Fig. 19. Final drive drain plug (**A**) and fill plug (**B**).

NOTE —

- *Use a 14 mm or 17 mm allen bit socket to remove the drain plug. Alternatively, cut approximately 30 mm (1.2 in.) from an allen key and use and open end wrench on the key stub.*
- *If the car is raised in the air, it should be on a level plane.*
- *To identify the type of differential (limited slip vs. open), locate the sheet metal data tag on the left-hand rear side of the final drive unit. This tag identifies the type and final drive ratio. For example S 3,10 means that it is a limited slip differential (S) with a 3.10 final ratio.*

Drive axle boots, inspecting

The rear drive axle protective boots should be inspected for cracks and any other damage that will allow contaminants to get into the joint. If the rubber boots fail, the water and dirt that enters the joint will quickly damage it. Replacement of the drive axle joint boots and inspection of the joints are described in **330 Rear Suspension**.

Fuel tank and fuel lines, inspecting

Inspect the fuel tank, fuel lines, and fuel system for damage or leaks. Check for fuel leaks in the engine compartment or fuel odors in the passenger compartment. Check for faulty fuel lines by bending them. If any leaks are present, fuel should be expelled. Check for a damaged fuel tank. Incorrectly raising the car can damage the tank. Check for any evaporative emissions hoses that may have become disconnected, checking carefully at the charcoal canister and evaporative emissions purge valve (where applicable). See **130 Fuel Injection–DME** and **160 Fuel Tank and Fuel Pump** for component locations and additional information.

WARNING —

When checking for fuel leaks, the engine must be cold. A hot exhaust manifold or exhaust system could cause the fuel to ignite or explode causing serious personal injury. Ventilate the work area and clean up spilled fuel immediately.

BODY AND INTERIOR MAINTENANCE

Windshield wiper blades, replacing

BMW recommends replacing the wipers blades at specified time intervals. Normally twice a year (before and after the cold season) works well. See **611 Wipers and Washers** for more information wiper troubleshooting and wiper blade replacement.

NOTE —

When replacing the wiper blades, check the tightness of the wipers arm nuts. Loose wiper arms can lead to damaged wiper linkages. If found to be loose, tighten the nuts to the torque listed in **611 Wipers and Washers**.

HVAC micro-filter, replacing (1991 and later cars)

The ventilation system intake air filters pollen and airborne particles from the air before it enters the passenger compartment. The paper-element should be replaced at every inspection I, or every 15K miles. A dirty filter will restrict air flow into the passenger compartment and lead to poor performance of the HVAC system. HVAC microfilter replacement is covered in **640 Heating and Air Conditioning**.

Body Lubrication

The body and door hinges, the hood latch, and the door check rods can be lubricated with a medium weight engine oil. Lubricate the seat runners with multipurpose grease.

Lubricate the sunroof guide rails with silicone spray. If door weatherstrips are sticking, lubricate them with silicone spray or talcum powder. Do not apply any oil to rubber parts.

The hood release cable should be lubricated as well. The radio antenna mast should be cleaned and lubricated with a product such as WD-40®.

The door locks and lock cylinders can be lubricated with an oil that contains graphite. Such a lubricant is available from BMW, Part No. 81 22 9 407 421

Seat Belts

Dirt and other abrasive particles will damage seat belt webbing. If it is necessary to clean seat belts, use a mild soap solution. Bleach and other strong cleaning agents may weaken the belt webbing.

> ***WARNING —***
> *Do not clean the seat belt webbing using dry cleaning or other chemicals. Allow wet belts to dry before allowing them to retract.*

The condition of the belt webbing and the function of the retractor mechanisms should be inspected. See **720 Seat Belts** for seat belt inspection information.

CLEANING AND PRESERVING

Exterior finish care

The longer dirt is left on the paint, the greater the risk of damaging the glossy finish, either by scratching or by the chemical effect dirt particles may have on the painted surface.

Washing

Do not wash the car in direct sunlight. If the engine hood is warm, allow it to cool. Beads of water not only leave spots when dried rapidly by the sun or heat from the engine, but also act as tiny magnifying glasses that can burn spots into the finish. Wash the car with a mixture of lukewarm water and a mild soap made expressly for washing cars. Rinse using plenty of clear water under as little pressure as possible. Wipe the body dry with a soft terry-cloth towel or chamois to prevent water-spotting.

Waxing

For a long-lasting, protective, and glossy finish, apply a hard wax after the car has been washed and dried. Use carnauba or synthetic based products. Waxing is not needed after every washing. You can tell when waxing is required by looking at the finish when it is wet. If the water coats the paint in smooth sheets instead of forming beads that roll off, a new coat of wax is needed. Wax should not be applied to black trim pieces, rubber, or other plastic parts.

Chassis washing

Periodic washing of the underside of the car, especially in Winter, will help prevent accumulation of road salt and rust. The best time to wash the underside is just after the car has been driven in wet conditions. Spray the chassis with a powerful jet of water. Commercial or self-service car washes may not be best for this, as they may recycle the salt-contaminated water.

Special cleaning

Tar and insect spots can be removed with a bug and tar remover. Never use gasoline, kerosene, nail polish remover, or other unsuitable solvents. This method can also be used to remove spotting from tree sap.

Interior care

Dirt spots can usually be removed with lukewarm soapy water. Use spot remover for grease and oil spots. Do not pour the liquid directly on the carpet, but dampen a clean cloth and rub carefully, starting at the edge of the spot and working inward. Do not use gasoline, naptha, or other flammable substances to clean the carpeting.

Vinyl and cloth upholstery and trim

Use a dry foam cleaner. Grease or paint spots can be removed by wiping with a cloth soaked with this cleaner. Use the same cleaner, applied with a soft cloth or brush, on the headliner and side trim panels. For cloth-covered seat areas, use the techniques described previously for cleaning the carpeting.

Leather upholstery and trim

Leather upholstery and trim should be periodically cleaned using a slightly damp cotton or wool cloth. The idea is to get rid of the dirt in the creases and pores that can cause brittleness and premature aging. On heavily soiled areas, use a mild detergent (such as Woolite®). Use two tablespoons to one quart of cold water. Dry the trim and upholstery completely using a soft cloth. Regular use of a good quality leather conditioner will reduce drying and cracking of the leather.

100 Engine—General

GENERAL 100-1
Cylinder Block and Crankshaft 100-1
Connecting Rods and Pistons. 100-1
Cylinder Head and Valvetrain 100-2
VANOS (Variable Valve Timing) 100-2
Lubrication System 100-2
Fuel Supply System 100-2
Engine Management System 100-3
Cooling System. 100-4

MECHANICAL TROUBLESHOOTING 100-4
Noise 100-4
Fluid Leaks 100-4
Smoking 100-4
Excessive Oil Consumption 100-5
High Fuel Consumption and Low Power. 100-5
Engine Not Running 100-5
Compression Test. 100-5
To test compression 100-5

DRIVEABILITY TROUBLESHOOTING 100-8
Warnings and Cautions 100-8
On-Board Diagnostics 100-8
Mechanical Condition. 100-11
Carbon Deposits 100-11
Preventive Maintenance 100-12
Basic Engine Settings 100-12
Oxygen Sensor 100-12
Air Flow Measurement and Vacuum Leaks . . 100-12
Battery Voltage 100-12
Wiring and Harness Connections 100-13
Ground Connections 100-13
Fuel Supply 100-14
Basic Requirements. 100-16

TABLES

a. Engine Specifications 100-1
b. Engine Mechanical Troubleshooting 100-7
c. DME Check Engine Light Fault Codes 100-9
d. Engine Driveability Troubleshooting 100-15

GENERAL

There are four basic engine configurations used in the 5-series cars covered by this manual; the 2.5 liter M20 engine, the 2.5 liter M50 engine, the 3.5 liter M30 engine, and the 3.0 and 4.0 liter M60 engines. See **Table a**.

Cylinder Block and Crankshaft

The cylinder block contains oilways for the lubrication system. All four engine block castings are unique and are not interchangeable.

On 6-cylinder engines, the cylinder block is cast iron with integral cylinders that are exposed on all sides to circulating coolant.

On 8-cylinder engines, the cylinder block is cast aluminum alloy. Instead of steel cylinder liners, the cylinders have a "Galnikal" lining. This lining or coating is created by depositing a "dispersion layer" of nickel on the aluminum cylinder walls.

The fully counterweighted crankshaft rotates in replaceable split-shell main bearings. Oilways drilled into the crankshaft provide bearing lubrication. Flexible lip seals pressed into alloy seal housings or covers are installed at both ends of the crankshaft.

Connecting Rods and Pistons

The connecting rods use replaceable split-shell bearings at the crankshaft end and solid bushings at the piston pin end. The pistons are of the three-ring type with two upper compression rings and a lower one-piece oil scraper ring. Full-floating piston pins are retained with circlips.

Table a. Engine Specifications

Model	Engine code	No. of cylinders	Displacement liters (cu. in.)	Compression ratio	Horsepower SAE net @ rpm	Torque lb-ft SAE net @ rpm
525i/525iT						
1989–1990	M20	6	2.5 (152.2)	8.8:1	168 @ 5,800	164 @ 4,300
1991–1992	M50	6	2.5 (152.2)	10.0:1	188 @ 5,900	184 @ 4,200
1993 on	M50TU (VANOS)	6	2.5 (152.2)	10.5:1	188 @ 5,900	184 @ 4,200
535i	M30	6	3.5 (209.3)	9.0:1	208 @ 5,700	225 @ 4,000
530i	M60	8	3.0 (182.9)	10.5:1	215 @ 5,800	214 @ 4,500
540i	M60	8	4.0 (243.1)	10.0:1	282 @ 5,800	295 @ 4,500

Cylinder Head and Valvetrain

On 6-cylinder engines, the cylinder head is an aluminum alloy casting that bolts to the cylinder block. V-8 engines use two 4-cylinder aluminum alloy cylinder heads. The cylinder head casting(s) employs a crossflow design for greater power and efficiency. Intake air enters the combustion chamber from one side while exhaust gasses exit from the other. Oilways in the head provide lubrication for the camshaft(s) and valvetrain.

On M50 and M60 engines, chain-driven twin camshafts (intake and exhaust) operate four valves per cylinder through hydraulic lifters. See Fig. 1.

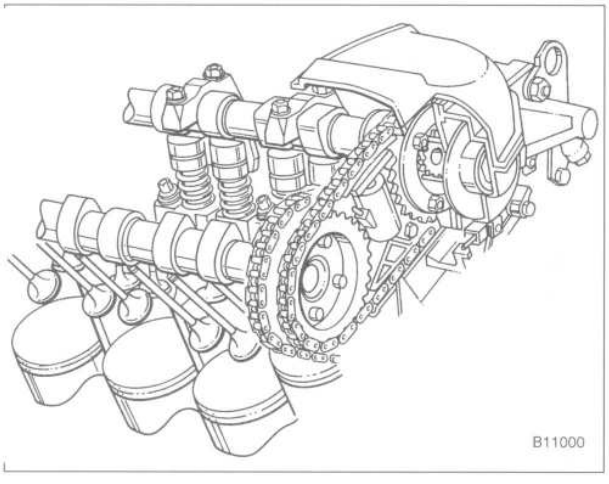

Fig. 1. M50 twin-cam, four-valve-per-cylinder engine.

VANOS (Variable Valve Timing)

1993 and later M50TU (Technical Update) engines are equipped with a variable intake valve timing system, known as VANOS (from the German words Variable Nockenwellen Steurung). The VANOS system electro-hydraulically adjusts intake valve timing for enhanced mid-range performance. The VANOS system is controlled by the DME 3.3.1 Motronic control module, using engine speed, engine load and engine temperature as the primary inputs.

At low speeds, the intake valves open late to ensure smooth engine operation. At mid-range speeds, the valves open early (valve timing advanced, VANOS actuated) for increased torque, improved driveability, and reduced emissions. And at high speeds, the valves again open late for optimum power and performance.

The main components of the VANOS system are the piston housing with integral spool valve and solenoid, and the modified intake camshaft and sprocket assembly. See Fig. 2.

When the engine is running, the piston housing is supplied with pressurized engine oil via the solenoid-actuated spool valve. Depending on the position of the spool valve, oil is directed to either the front or back side of the gear cup piston.

When the solenoid is in the off position, engine oil is directed to the back side of the piston. This holds the gear cup forward and valve timing is maintained at the normal "late" position. When the solenoid is energized, the spool valve is moved forward and oil pressure is directed to the front side of the piston. This in turn moves the gear cup further into the camshaft secondary drive, causing the camshaft to "advance" 12.5°. The helical gears are cut so that forward motion of the gear cup is translated into rotational motion of the camshaft. See **117 Camshaft Timing Chain** for testing and repair information on the VANOS system.

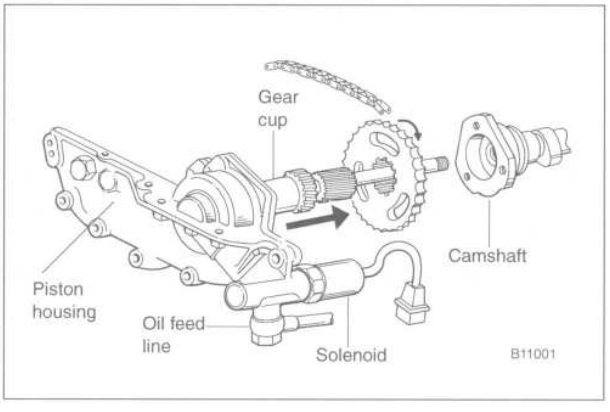

Fig. 2. VANOS (variable intake valve timing) system used on 1993 and later 525i models. When solenoid is actuated, oil pressure is directed to front side of gear cup piston. This forces gear cup into camshaft to advance intake valve timing.

Lubrication System

The lubrication system is pressurized whenever the engine is running. The oil pump draws oil through a strainer in the bottom of the oil pan, then forces it through a replaceable oil filter and into the engine oil passages. A pressure relief valve limits the maximum system pressure. A bypass valve prevents the oil filter from bursting and insures engine lubrication should the filter become plugged.

BMW engines are equipped with a dynamic oil pressure warning system and an oil level warning system. See **119 Lubrication System** for additional information.

Fuel Supply System

The fuel supply system stores fuel and provides the injection system with pressurized fuel. The fuel tank is installed under the rear of the car. The fuel gauge sending unit and the electric fuel pump are mounted in the tank. An in-line fuel filter cleans the fuel before it reaches the engine. See **160 Fuel Tank and Fuel Pump** for additional information.

Engine Management System

All engines covered by this manual use an advanced engine management system called Digital Motor Electronics (DME) or Motronic. In the DME system, fuel injection, ignition, and other functions, are combined under the control of one ECM. See Fig. 3. The DME engine management system uses the electrical signals from the air flow/mass sensor, the air and coolant temperature sensors, the speed/reference point sensor, and an oxygen sensor as its primary inputs to electronically calculate fuel delivery and ignition timing.

On M20 and M30 engines, the distributor is an integral part of the cylinder head, with the ignition rotor being driven directly off the camshaft. On M50 and M60 engines, individual ignition coils are located directly at the spark plugs, eliminating the distributor.

Fuel under pressure is injected via electronically controlled solenoid-type fuel injectors. The ECM electrically controls the opening and closing of the injectors by switching the ground side of each injector circuit. The exact amount of fuel injected is determined by the amount of time the injectors are open.

Four versions of DME systems are used on the cars covered by this manual, as listed below. The differences between the systems are mainly in the electronic circuitry, although some major differences do exist and most parts are not interchangeable between systems. All systems have adaptive abilities that adjust and re-program the system to compensate for things such as engine wear and vacuum leaks. For more information on DME engine management systems, see **130 Fuel Injection—DME.**

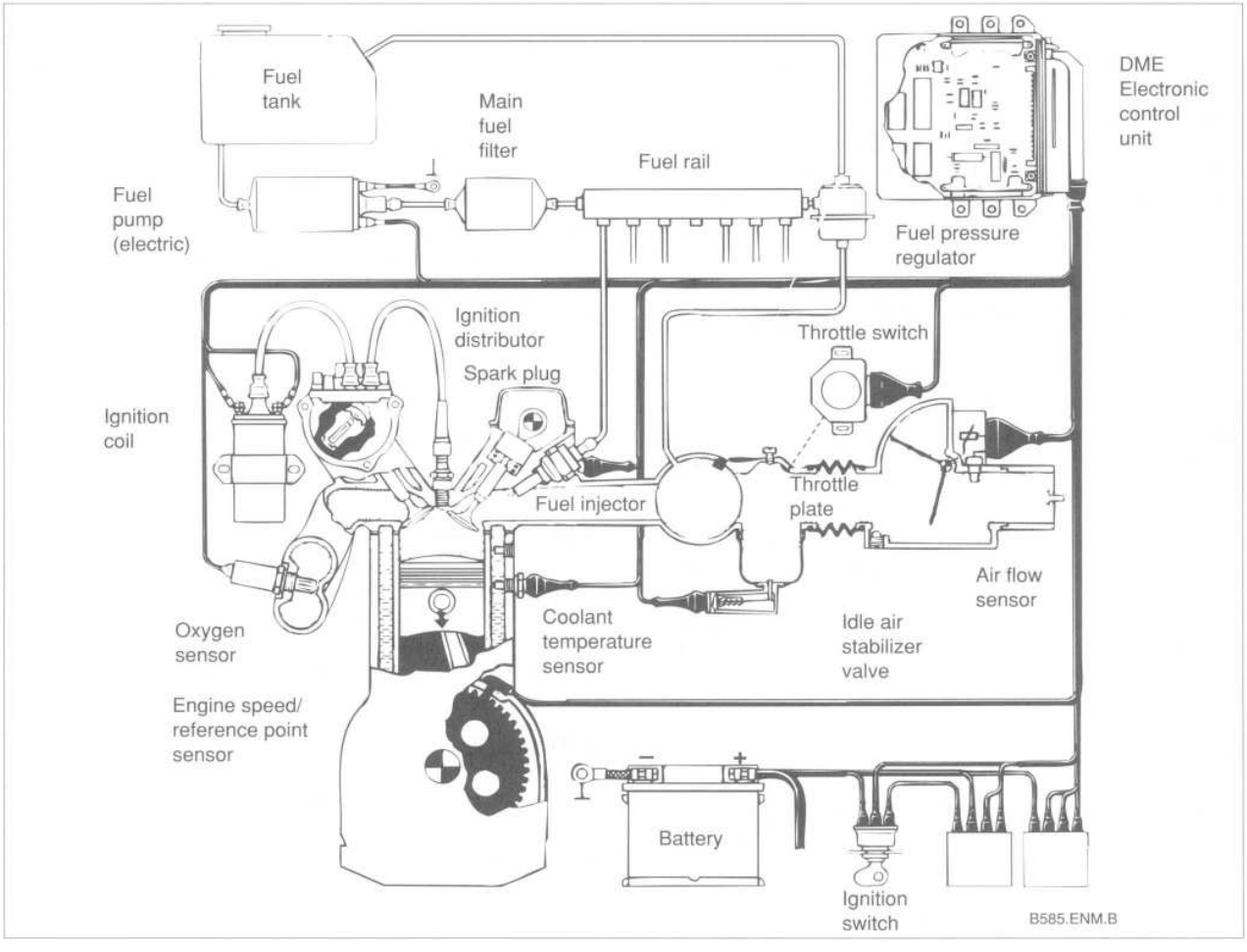

Fig. 3. Schematic of basic DME or Motronic engine management system.

DME (Motronic) Engine Management Systems

Model	System
525i 1989–1990 1991–1992 1993 and later	 DME 1.3 (air flow meter) DME 3.1 (mass air flow sensor—hot wire) DME 3.3.1 (mass air flow sensor—hot film)
535i	DME 1.3 (air flow meter)
530i/540i	DME 3.3 (mass air flow sensor—hot film)

NOTE—
All of the information in this manual labeled "Motronic" or "DME" applies to all versions, unless a particular version is specifically mentioned.

Cooling System

Whenever the engine is running, a coolant pump circulates coolant through the engine and, if either heater control valve(s) is open, through the heater core(s) in the passenger compartment. The coolant absorbs excess heat and carries it to the radiator where it is transferred into the passing airstream. A thermostat controls the flow of coolant through the radiator based on engine temperature.

MECHANICAL TROUBLESHOOTING

The troubleshooting information under this heading deals only with problems that affect the basic engine assembly: the cylinder block, the cylinder head, and their internal parts. For problems relating to how the engine runs, see **Driveability Troubleshooting** later in this repair group.

Only a few basic mechanical functions are required of the engine. The cylinder block, the cylinder head, and their internal moving parts must fit together properly, operate smoothly, and seal well enough to create and maintain compression while keeping the pistons, valvetrain, and ignition properly timed in relation to one another.

Noise

Most internal engine noises are the result of excessive clearance caused by wear, component failure, or a lack of lubrication.

A high-pitched metallic tapping noise occurring under load often signals pre-ignition or detonation of the air-fuel mixture in the combustion chamber. Most such problems can be resolved by repairs or adjustments to the fuel, ignition, or emission control systems. In high-mileage engines, however, carbon buildup in the combustion chambers may cause pre-ignition or detonation that can only be eliminated by removing the cylinder head and cleaning away the deposits.

High-pitched metallic tapping noises may also be caused by excessive clearances between small, lightweight parts such as those in the valvetrain. Often a simple valve adjustment (where applicable) will cure the problem. However, valvetrain noise accompanied by blue-gray exhaust smoke, particularly when the engine is started, often indicates worn valve guides.

Low-pitched metallic knocking sounds are usually caused by excessive clearance between heavy components. Piston slap, caused by too much clearance between the piston skirt and cylinder wall, is worst when the engine is cold, and may decrease or go away entirely as the engine warms.

Crankshaft bearing problems produce a deep, hollow knock that usually gets worse as the engine warms. An intermittent knock that lessens or disappears when the clutch pedal is depressed may indicate excessive crankshaft end play, the result of worn crankshaft thrust bearings.

A rumbling or groaning from the engine compartment may not indicate an engine problem, but rather a worn bearing or bushing in an engine-driven accessory. Possible noise sources include the coolant pump, alternator, power steering pump, and air conditioning compressor. To check each accessory, run the engine briefly with the drive belt disconnected and see if the noise stops. With the belt removed and the engine off, turn the pulley and shaft by hand to check for a bad bearing or bushing. With the exception of the air conditioning compressor, a properly functioning engine accessory should turn smoothly.

NOTE—
The air conditioning compressor is equipped with an electro-magnetic clutch-type pulley, so a bad compressor makes noise only when the clutch is engaged.

Fluid Leaks

Fluid leaking from the engine compartment may be gasoline, oil, coolant, brake fluid, or automatic transmission fluid. For all types of leaks, look for wet areas to help pinpoint the source. It is helpful to start by cleaning the suspected area.

Smoking

Blue-gray smoke in the exhaust is caused by burning oil that has entered the combustion chamber by getting past the piston rings, valve guides, cylinder head gasket, or some combination of the three. See **Compression Test** below to help pinpoint the source.

Oil smoke or white smoke (steam) that appears in the exhaust, combined with low compression in one or more cylinders, is most likely the result of a failed cylinder head gasket. Look for bubbles in the coolant or coolant loss, oil in the radiator, or water in the oil that turns the oil an opaque, creamy brown.

Black smoke in the exhaust results from the engine receiving too much fuel. See **Driveabilty Troubleshooting** below for additional diagnostic information.

Excessive Oil Consumption

Some oil consumption is normal and indicates the proper distribution of lubricant to the piston rings. This is why the oil level must be checked, and occasionally corrected, between oil changes. Aside from leaks, high oil consumption is usually accompanied by smoking, however slight. The causes of excessive oil consumption are generally the same as those for oil smoke in the exhaust. As with smoking symptoms, gradual increases are usually caused by engine wear.

High Fuel Consumption and Low Power

High fuel consumption and low power usually indicate problems with the fuel or ignition systems, particularly on a low-mileage engine. On an engine with high mileage, low compression from accumulated wear may be the cause. Normal wear of the valves, valve seats, piston rings, and cylinder walls decreases their ability to seal. As a result, the engine becomes less efficient and has to work harder, using more fuel, to produce the same amount of power. See **Compression Test** below to help evaluate engine condition.

Engine Not Running

If the battery, fuel and ignition systems are OK, an engine problem that affects valve or ignition timing may prevent the engine from starting and running. The timing belt (M20 engine) or timing chain (M30, M50, M60 engines) and sprockets are responsible for synchronizing the movements of the camshaft and valves with those of the crankshaft and pistons.

> ***CAUTION —***
> *On 1989 and 1990 525i models (with M20 engine), the timing belt should be replaced at the specified mileage interval. If the timing belt fails in service, the valves will contact the pistons and major engine damage will result. See* **020 Maintenance Program** *for additional information.*

Compression Test

The compression pressures in the individual cylinders can tell a lot about the condition of an engine without the need to take it apart.

> ***NOTE —***
> *If a compression gauge is not available, a compression test can be performed by an authorized BMW dealer or other qualified shop at a reasonable cost.*

To obtain accurate test results, the battery and starter must be capable of cranking the engine at 250–300 rpm, and the engine should be at normal operating temperature. Clean around the spark plugs before removal to prevent debris from entering the engine.

To test compression

1. On all engines except engines with Electronic Throttle Control (EML), remove the DME main relay and the fuel pump relay. See Fig. 4.

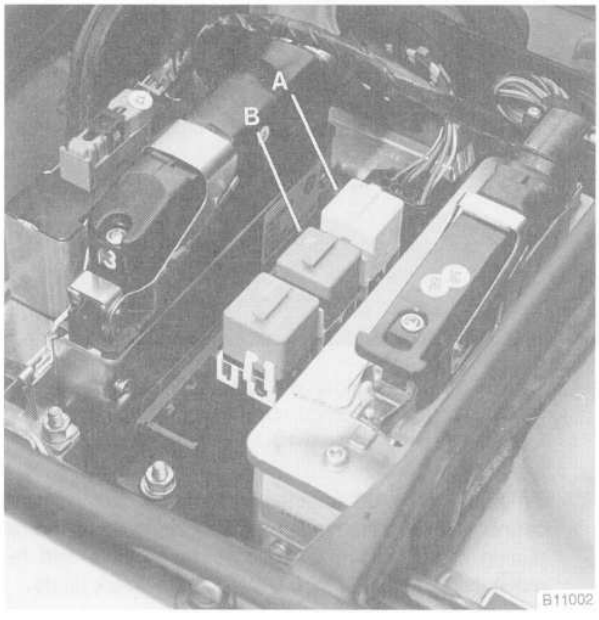

Fig. 4. DME main relay (**A**) and fuel pump relay (**B**) in right rear of engine compartment (M50 engine shown, other engines are similar).

> ***NOTE —***
> *EML or Electronic Throttle Control may be equipped on 1991 and later 535i, 530i, and 540i models. The EML system is used with the ASC/ASC+T (Automatic Stability Control/Traction) system and operates the throttle valve electrically via a motor instead of a mechanical throttle cable.*

2. On engines with EML, remove the fuel pump relay (Fig. 4). On 535i models, disable the ignition by disconnecting the wire at terminal 1 of the ignition coil.

> ***NOTE —***
> *On 535i models, the ignition coil is mounted at the front right (passenger's) side shock tower. Be sure to insulate the disconnected wire end using electrical tape.*

3. On M20 and M30 engines, disconnect the spark plug wires and then remove the spark plugs.

4. On M50 and M60 engines, remove the engine cover from the top of the engine by prying off the nut covers and removing the mounting nuts. See Fig. 5.

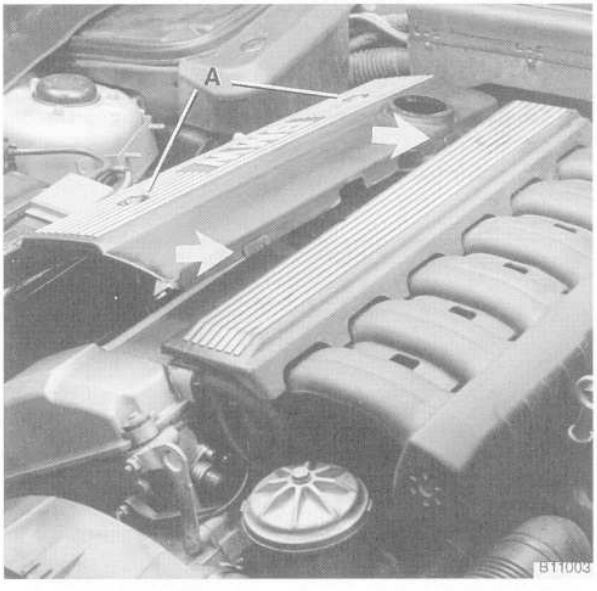

Fig. 5. Remove cover on M50 engine by prying off nut covers and removing nuts (**A**). Be careful not to let rubber insulators fall off as cover is removed (**arrows**). M60 engine is similar.

5. On M50 and M60 engines, disconnect the harness connectors from the ignition coils by lifting up on the retaining clip. Remove the coil mounting nuts and remove the coils. See Fig. 6. Remove the spark plugs.

NOTE —

- *Use a 5/8 in. spark plug socket to remove the spark plugs on M50 and M60 engines.*
- *Check the spark plugs for oil deposits that may indicate poor cylinder sealing, then set them aside in order. Used spark plugs should be reinstalled in the same cylinder from which they were removed.*

6. On M30 engines, remove the air cleaner assembly.
7. Install the compression gauge in the first cylinder's spark plug hole, tight enough to form a good seal.
8. With the parking brake set, the transmission in Park or Neutral, and the accelerator pedal pressed to the floor, crank the engine with the starter. Record the highest value indicated by the gauge.

NOTE —

- *The compression gauge reading should increase with each compression stroke, and reach near its maximum reading in 2 or 3 strokes.*
- *On engines with EML, check that the throttle plate opens when the starter is actuated.*

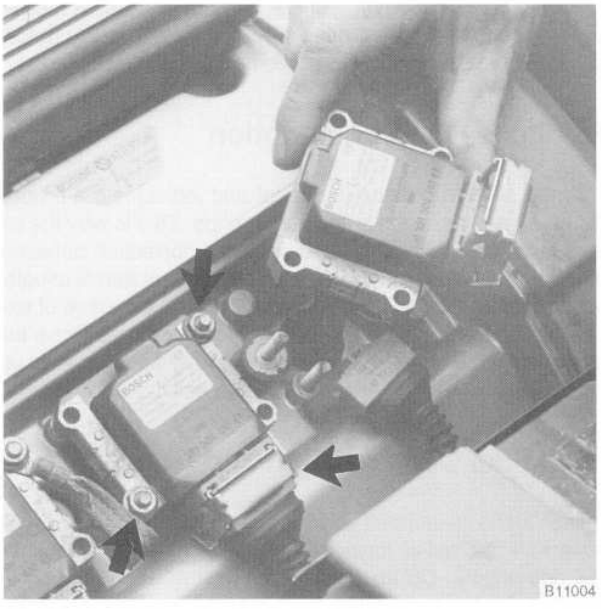

Fig. 6. Remove ignition coils on M50/M60 engines by disconnecting harness connector and removing mounting nuts (**arrows**).

9. Release the pressure with the compression gauge valve, then remove the gauge from the spark plug hole. Repeat the test for each of the other cylinders and compare the results with the values given below.

Compression Pressure

- Minimum . . . . . 10-11 bar (142-156 psi)
- Maximum difference between cylinders . . . . . 0.5 bar (7 psi)

10. Reinstall the spark plugs and spark plug wires or ignition coils to their original locations. The remainder of installation is the reverse of removal. Be sure to reinstall all wires disconnected during the test.

Tightening Torque

- Spark plug to cylinder head . . . . . 25 Nm (18 ft-lb)

Low compression, or gauge readings that increase gradually over many engine strokes, indicates a poorly sealed combustion chamber. Relatively even pressures that are below specification indicate worn piston rings and/or cylinder walls. Erratic values tend to indicate valve leakage. Dramatic differences, such as good values in some cylinders and low values in one or two other cylinders are often the sign of a localized failure like a blown head gasket, burned valve, or broken piston ring.

Table b lists the symptoms of common engine mechanical problems, their probable causes and the suggested corrective actions. The bold type indicates the repair groups where applicable test and repair procedures can be found.

Table b. Engine Mechanical Troubleshooting

Symptom	Probable cause and corrective action
1. Engine will not start or run. Starter cranks engine at normal speed.	a. No fuel reaching engine, fuel tank empty. Check for fuel in tank. b. No voltage to spark plugs. Check DME ignition system. Repair Group **120** c. Incorrect valve timing. Check timing belt or timing chain. Repair Group **116** d. Fuel pump not operating. Repair Group **160**
2. Check Engine warning light illuminated.	a. DME engine management system self-diagnostic fault detected. Check fault codes described below under **On-board Diagnostics**.
3. Blue-gray exhaust smoke and oily spark plugs. Indicates oil burning in combustion.	a. Contaminated or gasoline-diluted engine oil. Change engine oil and replace oil filter. b. Faulty valve guide seals or valve guides. Replace valve guide oil seals or overhaul cylinder head. Repair Group **116** c. Worn piston rings. Overhaul or replace engine. d. Failed cylinder head gasket. Replace gasket. Repair Group **113**
4. White exhaust smoke (steam).	a. Failed cylinder head gasket (probably accompanied by low compression readings). Replace gasket and resurface cylinder head if necessary. Repair Group **113** b. Warped or cracked cylinder head. Resurface or replace cylinder head. Repair Group **113** c. Cracked cylinder block. Replace engine or short block.
5. Pinging or rattling when under load, traveling uphill, or accelerating (especially from low speeds). Indicates pre-ignition or detonation.	a. Ignition timing too advanced. Knock sensors faulty (1993 and later M50/M60 engines only) Repair Group **120** b. Fuel octane level too low. Use higher octane fuel. c. Engine running too hot or overheating. Check cooling system. Repair Group **170** d. Wrong spark plug (incorrect heat range). Replace spark plugs. Repair Group **120** e. Air/fuel mixture too lean. Repair Group **130** f. Excessive carbon deposits in combustion chambers. Remove cylinder head and decarbonize combustion chamber. Repair Group **116**
6. Light metallic tapping that varies directly with engine speed. Oil pressure warning light **not** illuminated.	a. Valve clearances out of adjustment or hydraulic lifter(s) faulty. Adjust valve clearances (M20/M30 engines) or replace hydraulic lifters (M50/M60 engine). Repair Group **116** b. Low oil pressure or defective warning light. Check oil pressure and warning light circuit. Repair Group **119**
7. Light metallic knock that varies directly with engine speed. Oil pressure warning light blinking or fully illuminated; may be most noticeable during hard stops or cornering.	a. Low oil level. Check and correct oil level. b. Contaminated or gasoline-diluted engine oil. Change engine oil and replace oil filter. c. Low oil pressure/worn or faulty oil pump. Oil pump pickup restricted/clogged. Check oil pressure. Repair Group **119**
8. Screeching or squealing under load that goes away when coasting. Indicates slipping drive belt.	a. Loose, worn, or damaged V-belt (M20 and M30 engine) or poly-ribbed belt (M50/M60 engine). Inspect, replace, or tighten belt(s). Repair Group **020**
9. Growling or rumbling that varies with engine rpm. Indicates a bad bearing or bushing in an engine-driven accessory.	a. Remove drive belt(s) to identify faulty component. Check for play, bearing roughness, and loose mountings. Refer to appropriate repair group in this section for repair procedures.

DRIVEABILITY TROUBLESHOOTING

DME engine management systems have self-diagnostic capabilities. When a problem is detected, a fault code is stored in the system ECM. When a fault code is set, the "Check Engine" warning light may also come on, indicating an emissions-related fault. Always check for fault codes as the first step in troubleshooting a driveability problem. Check Engine light fault codes and the most common reasons for the malfunctions are given below.

Warnings and Cautions

For personal safety, as well as the protection of sensitive electronic components, the following warnings and cautions must be adhered to during all troubleshooting, maintenance, and repair work.

WARNING —

- *The ignition system produces high voltages that can be fatal. Avoid contact with exposed terminals and use extreme caution when working on a car with the ignition switched on or the engine running.*
- *Do not touch or disconnect any high voltage cables from the coil, distributor, or spark plugs while the engine is running or being cranked by the starter.*
- *Connect and disconnect the DME system wiring and test equipment leads only when the ignition is switched off.*
- *Disconnecting the battery will erase any fault code(s) stored in memory. To ensure driver's safety, check for fault codes prior to disconnecting the battery cables. If the Check Engine light is illuminated, see* **On-board Diagnostics** *below for DME Motronic fault code information. If any other system faults have been detected (indicated by an illuminated warning light), see an authorized BMW dealer. Additional systems with self-diagnostic capabilities include; ABS (ANTI LOCK), SRS (AIR BAG), EML/ASC (traction control).*
- *Gasoline is highly flammable and its vapors are explosive. Do not smoke or work on a car near heaters or other fire hazards when diagnosing and repairing fuel system problems. Have a fire extinguisher available in case of an emergency.*

CAUTION —

- *Do not connect any test equipment that delivers a 12-volt power supply to terminal 15 (+) of the ignition coil. The current flow may damage the DME ECM. In general, connect test equipment only as specified by BMW, this manual, or the equipment maker.*
- *Do not attempt to disable the ignition system by removing the center coil wire or by removing the distributor cap (where applicable). High voltage may arc to other electrical components causing extensive damage.*
- *Do not disconnect the battery with the engine running.*
- *Do not run the engine with any of the spark plug wires disconnected. Catalytic converter damage may result.*

On-Board Diagnostics

An On-Board Diagnostic system is incorporated into the DME Motronic control module. This system detects certain emissions-related engine management malfunctions and turns on the Check Engine light in the instrument cluster. The Check Engine light will stay on until the code(s) are called up and the memory is erased.

Fault codes can be read by turning the ignition key on and fully depressing the accelerator pedal to the floor five times within five seconds. The Check engine light will then remain on for five seconds, blink off, come on for 2.5 seconds, then go off for 2.5 seconds. At this point, the fault codes will begin to flash. See **Table c.**

If more than one fault has been detected, each code will be separated by a 2.5 second pause. When all fault codes have been displayed, there will be 0.5 second flash and then the light will remain off. To read the codes again, turn the key off and then on again. Depress the accelerator pedal to the floor five times quickly (within 5 seconds). The codes will begin to repeat.

To erase the fault code memory, first make sure the fault code 1000 (short blink and then light goes out for long period) is present, then depress the throttle fully for at least 10 seconds. Reactivate the fault code memory as described earlier and check for the 1444 code (no faults stored).

Table c. DME Check Engine Light Fault Codes

Graphic representation of flashing Check Engine light fault code: 1221

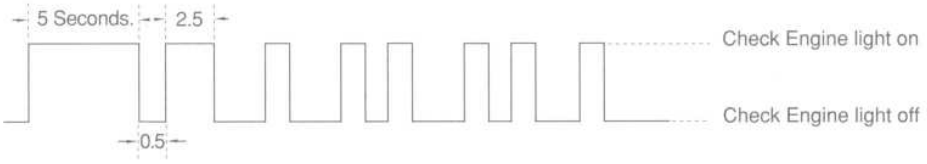

Fault code and meaning	Corrective action
Code 1211: DME Control Module	DME control module may be faulty. This code appears if the control module fails self test. Check inputs to control module. Repair Group **130**
Code 1215: Air flow/air mass sensor	Check air flow or air mass sensor and wiring to sensor. Repair Group **130**
Code 1216: Throttle potentiometer	Test throttle potentiometer resistance and wiring. Repair Group **130**
Code 1218: Output stage, group #1 (DME 3.3/3.3.1only)	Test DME control module input/outputs. Repair Group **130**
Code 1219: Output stage, group #2 (DME 3.3/3.3.1only)	Test DME control module input/outputs. Repair Group **130**
Code 1221: Oxygen sensor #1	Check sensor output signal to DME control module. Repair Group **130**
Code 1212: Oxygen sensor #2 (DME 3.3 only)	Check sensor output signal to DME control module. Repair Group **130**
Code 1222: Oxygen sensor lean/rich control stop	Check for intake air leaks or reasons for rich mixture. See Driveability Troubleshooting given earlier in this repair group
Code 1213: Oxygen sensor #2 lean/rich control stop (DME 3.3 only)	Check for intake air leaks or reasons for rich mixture. See Driveability Troubleshooting given earlier in this repair group
Code 1223: Coolant temperature sensor (NTC)	Test coolant temperature sensor. Repair Group **130**
Code 1224: Air temperature sensor (NTC)	Test intake air temperature sensor. Repair Group **130**
Code 1225: Knock sensor #1 (DME 3.3/3.3.1 only)	Check knock sensor and sensor wiring. Repair Group **120**
Code 1226: Knock sensor #2 (DME 3.3/3.3.1 only)	Check knock sensor and sensor wiring. Repair Group **120**
Code 1227: Knock sensor #3 (DME 3.3 only)	Check knock sensor and sensor wiring. Repair Group **120**
Code 1228: Knock sensor #4 (DME 3.3 only)	Check knock sensor and sensor wiring. Repair Group **120**
Code 1231: Battery voltage monitor	Test battery voltage and battery, check charging system and starter. Repair Group **121**
Code 1232: Idle position signal (DME 1.3 only)	Test closed throttle (idle) signal to DME control module. Repair Group **130**
Code 1233: Full throttle position signal (DME 1.3 only)	Check full throttle signal to DME control module. Repair Group **130**
Code 1234: Speedometer "A" signal (DME 3.3/3.3.1 only)	Check wiring between instrument cluster and DME control module. **Electrical Wiring Diagrams**
Code 1237: A/C compressor cutoff (DME 3.3/3.3.1 only)	Test DME control module inputs/outputs from A/C system. Repair Group **130**
Code 1242: A/C compressor signal (DME 3.3/3.3.1 only)	Test DME control module inputs/outputs from A/C system. Repair Group **130**
Code 1243: Crankshaft position sensor (DME 3.3/3.3.1 only)	Test crankshaft position/rpm sensor and wiring from sensor to DME control module. Repair Group **120**
Code 1244: Camshaft position sensor (DME 3.3/3.3.1 only)	Test camshaft position sensor and wiring from sensor to DME control module. Repair Group **130**

Table c. DME Check Engine Light Fault Codes (continued)

Graphic representation of flashing Check Engine light fault code: 1221

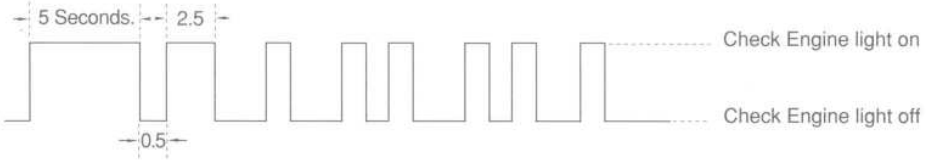

Fault code and meaning	Corrective action
Code 1245: Electronic transmission control intervention (DME 3.3/3.3.1 only)	Check wiring between DME control module and auto. transmission control module
Code 1247: Ignition secondary monitor (DME 3.3/3.3.1 only)	Check secondary voltage to ignition coils. Check wiring at ignition coils. Repair Group **120**
Code 1251: Fuel injectors (DME 1.3 only- cylinders 1, 3, 5)	Test injector operation/signal to injectors. Repair group **130**
Code 1252: Fuel injectors (DME 1.3 only - cylinders 2, 4, 6)	Test injector operation/signal to injectors. Repair group **130**
Code 1251: Fuel injector #1 (DME 3.1/3.3/3.3.1 only)	Test injector operation/signal to injector. Repair group **130**
Code 1252: Fuel injector #2 (DME 3.1/3.3/3.3.1 only)	Test injector operation/signal to injector. Repair group **130**
Code 1253: Fuel injector #3 (DME 3.1/3.3/3.3.1 only)	Test injector operation/signal to injector. Repair group **130**
Code 1254: Fuel injector #4 (DME 3.1/3.3/3.3.1 only)	Test injector operation/signal to injector. Repair group **130**
Code 1255: Fuel injector #5 (DME 3.1/3.3/3.3.1 only)	Test injector operation/signal to injector. Repair group **130**
Code 1256: Fuel injector #6 (DME 3.1/3.3/3.3.1 only)	Test injector operation/signal to injector. Repair group **130**
Code 1257: Fuel injector #7 (DME 3.3 only)	Test injector operation/signal to injector. Repair group **130**
Code 1258: Fuel injector #8 (DME 3.3 only)	Test injector operation/signal to injector. Repair group **130**
Code 1261: Fuel pump control	Test fuel pump relay and fuel pump circuit. Repair group **160**
Code 1262: Idle speed control	Test idle air control valve and signal to valve. Repair Group **130**
Code 1263: Fuel tank evaporative (EVAP) system	Test EVAP purge valve. Repair Group **160**
Code 1264: Oxygen sensor heater	Test oxygen sensor heater and heater relay. Repair group **130**
Code 1265: Check engine lamp (DME 3.3/3.3.1 only)	Test for faulty bulb or wiring. **Electrical Wiring Diagrams**
Code 1266: VANOS (DME 3.3.1 only)	Test VANOS solenoid. Check for signal to VANOS solenoid.
Code 1267: Air pump relay control (DME 3.3/3.3.1 only)	Test air pump relay and wiring (where applicable) **Electrical Wiring Diagrams**
Code 1271: Ignition coil #1 (DME 3.3/3.3.1 only)	Test ignition coil and wiring to ignition coil. Repair Group **120**
Code 1272: Ignition coil #2 (DME 3.3/3.3.1 only)	Test ignition coil and wiring to ignition coil. Repair Group **120**
Code 1273: Ignition coil #3 (DME 3.3/3.3.1 only)	Test ignition coil and wiring to ignition coil. Repair Group **120**
Code 1274: Ignition coil #4 (DME 3.3/3.3.1 only)	Test ignition coil and wiring to ignition coil. Repair Group **120**
Code 1275: Ignition coil #5 (DME 3.3/3.3.1 only)	Test ignition coil and wiring to ignition coil. Repair Group **120**
Code 1276: Ignition coil #6 (DME 3.3/3.3.1 only)	Test ignition coil and wiring to ignition coil. Repair Group **120**
Code 1277: Ignition coil #7 (DME 3.3 only)	Test ignition coil and wiring to ignition coil. Repair Group **120**
Code 1278: Ignition coil #8 (DME 3.3 only)	Test ignition coil and wiring to ignition coil. Repair Group **120**
Code 1281: DME control module memory supply (DME 3.3/3.3.1 only)	Check voltage supply from battery to DME control module. **Electrical Wiring Diagrams**
Code 1282: Fault code memory (DME 3.3/3.3.1 only)	Check DME control module inputs/outputs. Control module may be faulty. Repair Group **130**

Table c. DME Check Engine Light Fault Codes (continued)

Graphic representation of flashing Check Engine light fault code: 1221

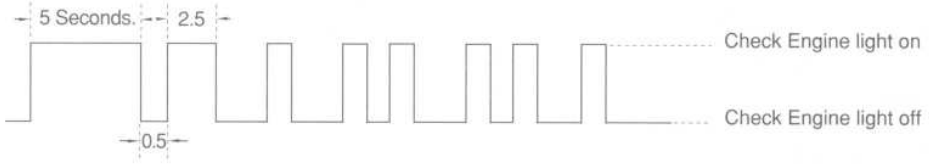

Fault code and meaning	Corrective action
Code 1283: Fuel injector output stage (DME 3.1/3.3./3.3.1 only)	Check DME control module inputs/outputs. Control module may be faulty. Repair Group **130**
Code 1286: Knock control test pulse (DME 3.3/3.3.1 only)	Check DME control module inputs/outputs. Control module may be faulty. Repair Group **130**
Code 1000 (light remains off):	End of fault code output—all fault codes have been displayed. No corrective action necessary. Repeat test if necessary
Code 1444:	No more faults. No corrective action necessary. This code must be present to erase fault memory

Mechanical Condition

When troubleshooting an engine that fails to start or runs poorly, first check its mechanical condition — particularly if the engine has high mileage. See **Compression Test** earlier in this repair group to help determine whether the engine has mechanical problems.

On M20 and M30 engines, check that the valves are correctly adjusted. If the clearances are too small, the valves may not close all the way, resulting in low compression and a loss in power. If the clearances are too large, the valves may not fully open causing a reduction in engine efficiency. Procedures for checking and adjusting valve clearances are described in **116 Cylinder Head and Valvetrain.**

NOTE —

M50 and M60 engines are equipped with hydraulic lifters and do not require any periodic adjustment.

Carbon Deposits

Carbon deposits on injectors and intake valves can cause driveability problems such as rough idle, stalling, or hesitation. Problems are likely to occur after a cold start and during engine warm-up. See Fig. 7. Severe fouling can be identified by a visual inspection, but special equipment is required to check for minor carbon build-up on the injectors. Intake valve inspection is more difficult, as the intake manifold must first be removed. Carbon deposits on intake valves and injectors should be removed prior to troubleshooting a driveability problem.

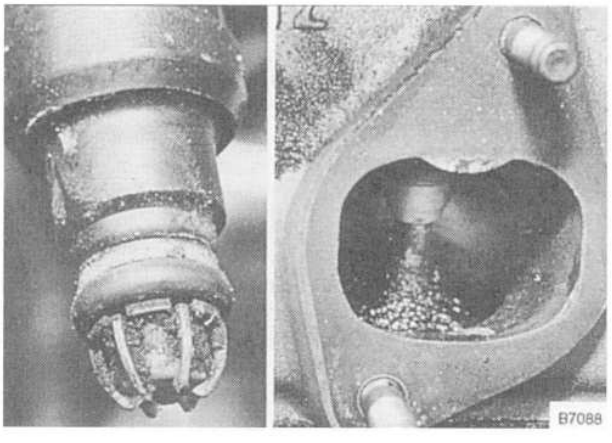

Fig. 7. Examples of carbon deposits on fuel injector (left) and intake valve (right).

NOTE —

Always consult an authorized BMW dealer for approved fuel injector and intake valve cleaning methods and /or chemicals.

Preventive Maintenance

The condition of the fuel, ignition and emission control system components has a direct effect on engine performance and driveability. BMW specifies maintenance of certain parts at regular intervals to keep the engine in proper tune. Extending maintenance intervals beyond the time or mileage recommended by the manufacturer can adversely affect the way the engine runs. When troubleshooting driveability problems, a good starting point is to perform a major engine service, particularly if one is overdue. For maintenance schedules, major engine service and other driveability-related maintenance procedures, see **020 Maintenance Program**.

Basic Engine Settings

Idle speed, idle mixture (%CO), and ignition timing are unadjustable on the DME systems covered by this manual. The adaptive DME system is designed to automatically compensate for changes in engine operating conditions, although the adaptive range is limited. Once these limits are exceeded, driveability problems usually become noticeable.

NOTE—
If the DME adaptive limits are exceeded, the Check Engine light will come on, indicating an emission related fault. For Check Engine light diagnostics and on-board diagnostic fault codes, see ***On-board Diagnostics*** *given above.*

Oxygen Sensor

A high oxygen level in the engine exhaust indicates a lean air-fuel mixture and a low oxygen level indicates a rich mixture. The oxygen sensor, shown in Fig. 8, measures the oxygen content in the exhaust gas and generates a variable voltage signal. Using that feedback signal as an input, the DME control module fine tunes the air-fuel mixture.

NOTE—
The oxygen sensor signal is ignored until the engine reaches a specified minimum temperature. Therefore, when troubleshooting cold engine driveability problems, the oxygen sensor can be ruled out as a possible cause.

As the oxygen sensor ages, its ability to react quickly to changing conditions deteriorates, and it may eventually cease to produce any signal at all. To check the operation of the oxygen sensor, see **130 Fuel Injection—DME**.

Air Flow Measurement and Vacuum Leaks

The primary input used by the fuel injection system to determine how much fuel should be delivered is the signal from the air flow meter (M20/M30 engines) or mass air flow sensor (M50/M60 engines) in the intake air ductwork.

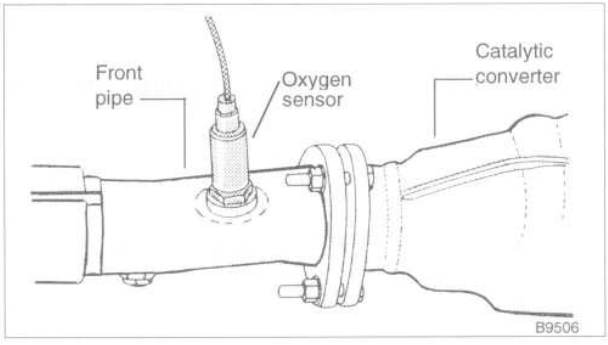

Fig. 8. Oxygen sensor measures oxygen content of exhaust gas as indicator of air-fuel ratio and combustion efficiency.

Because proper fuel metering depends on accurate measurement of the incoming air, any unmeasured air that enters the engine downstream of the air mass or air flow meter will cause a lean air-fuel mixture and possibly affect driveability.

There are many places for unmeasured air to enter the engine. First, inspect all hoses, fittings, ducts, seals, and gaskets in the intake air tract for cracks or looseness. It may be necessary to remove parts that cannot be fully checked in their installed positions. Also make sure all of the intake manifold and throttle body mounting nuts are tight.

In addition to air leaks, air restrictions can also cause driveability problems. Remove the air filter and hold it up to a strong light source. If the filter does not pass light, it is restricted and should be replaced. Also, remove the intake air ductwork and check for oily deposits at the throttle plate. Buildup in this area can cause an erratic idle. Clean away any deposits using a cloth wetted with carburetor cleaner and reinstall the ductwork.

CAUTION—
Do not spray carburetor cleaner directly into the throttle area. Spraying cleaner may force it into the throttle position switch or sensor and cause damage.

Battery Voltage

All of the electrical components in the fuel injection and ignition systems require a minimum voltage to operate properly. When troubleshooting engine driveability problems, one of the first checks should be to make sure the battery is fully charged and capable of delivering all its power to the electrical system.

To make a quick check of battery charge, measure the voltage across the battery terminals with all cables attached and the ignition off. A fully charged battery will measure 12.6 volts or slightly more, compared to 12.15 volts for a battery with a 25% charge.

Even a fully charged battery cannot deliver power unless it is properly connected to the electrical system. Check the battery terminals for corrosion and loose cable connections. If the battery does not maintain the proper voltage, the charging system may be at fault. See **121 Battery, Starter, Alternator**.

If a battery cable connection has no visible faults, but is still suspect, measure the voltage drop across the connection. A large drop indicates excessive resistance, meaning the connection is corroded, dirty, or damaged. Clean or repair the connection and retest.

NOTE —

For instructions on conducting a voltage drop test, and other general electrical troubleshooting information, see **600 Electrical System—General**.

Wiring and Harness Connections

The electronic fuel injection and ignition systems operate at low voltage and current values, making them sensitive to small increases in resistance. The electrical system is routinely subjected to corrosion, vibration and wear, so faults or corrosion in the wiring harness and connectors are common causes of driveability problems.

NOTE —

A faulty DME ECM is seldom the cause of a driveability problem. These control modules are very reliable and failures are rare. Most driveability problems are caused by incorrect or missing signals to the ECM, or by other defective components.

Visually inspect all wiring, connectors, switches and fuses in the system. Loose or damaged connectors can cause intermittent problems, especially the small terminals in the ECM connectors. Disconnect the wiring harness connectors to check for corrosion, and use electrical cleaning spray to remove contaminants. Often, simply disconnecting and reconnecting a dirty connector several times will clean the terminals and help to reestablish good electrical contact.

If a wiring harness connector has no visible faults, but is still suspect, measure the voltage drop across the connector. A large drop indicates excessive resistance, meaning the connector is corroded, dirty or damaged. Clean or repair the connector and retest.

Ground Connections

For any electrical circuit to work, it must make a complete path, beginning at the positive (+) battery terminal and ending at the negative (–) terminal. The negative (–) battery cable is attached to the car's chassis. Therefore, any wire or metal part attached to the chassis provides a good ground path back to the negative (–) battery terminal.

Poor ground connections are a major source of driveability problems. If any of the main ground connections for the ignition system or the DME system (where applicable) are faulty, the increased resistance in that circuit will cause problems.

Visually inspect all ground wires and connections for breaks, looseness or corrosion. Be careful because wires sometimes break internally or in areas not easily visible. The main grounds for the DME system are shown in Fig. 9, Fig. 10, and Fig. 11. Also check the main fuel pump ground under the right hand side of the rear seat cushion.

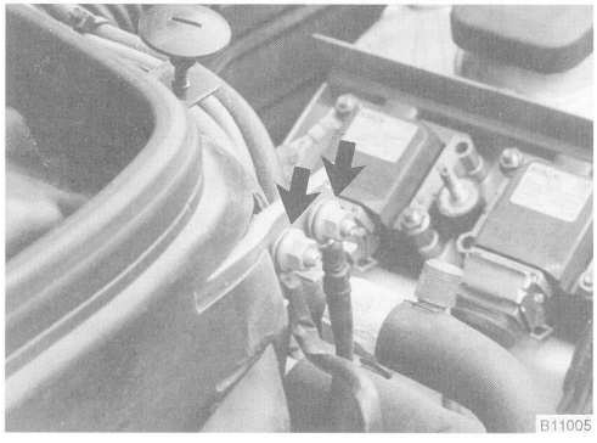

Fig. 9. Main grounds (**arrows**) for DME 1.3, DME 3.1, and DME 3.3.1. Grounds are in right rear of engine compartment.

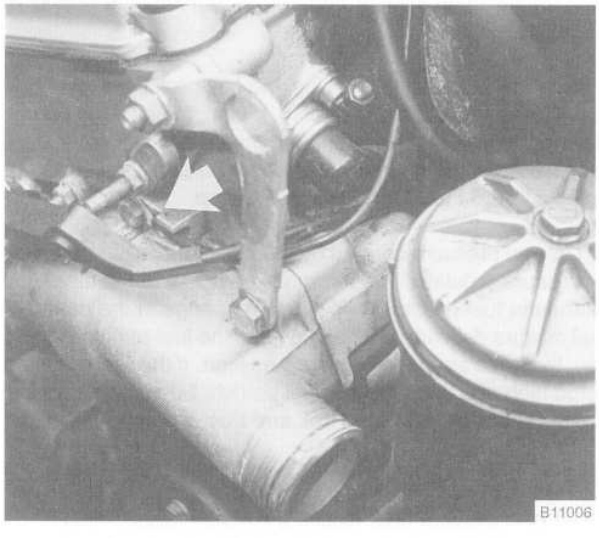

Fig. 10. Main ground (**arrow**) at front of engine for DME 3.1 and DME 3.3.1. DME 3.1 shown. DME 3.3.1 uses two ground wires at front of engine.

If a ground connection has no visible faults, but is still suspect, measure the voltage drop across the connection. A large drop indicates high resistance, meaning the connection is corroded, dirty or damaged. Clean or repair the connection and retest.

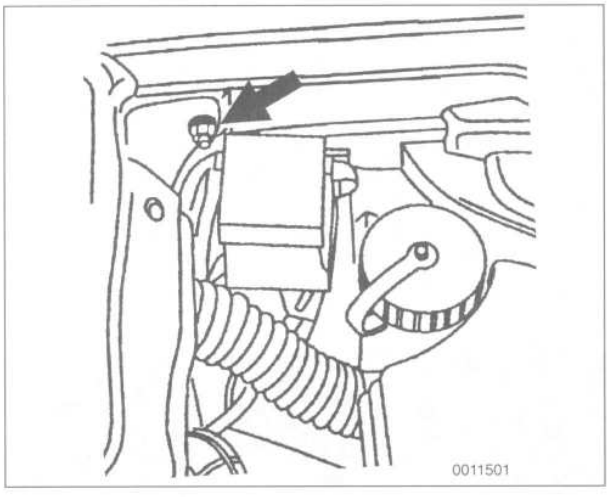

Fig. 11. Main ground (**arrow**) for DME 3.3. Grounds are in left rear of engine compartment.

NOTE —

Instructions for making voltage drop test and other general electrical troubleshooting information can be found in **600 Electrical System—General**.

Fuel Supply

For the engine to start and run properly under various operating conditions, the injection system must deliver fuel in precise proportion to the amount of air entering the engine. To do this, the injection system requires an unrestricted supply of fuel from the fuel pump.

If the fuel pump is not working, the engine will not run. If the fuel filter or a fuel line is restricted, the engine may run poorly. If the restriction is severe enough the engine will not start. If fuel delivery problems are suspected, perform the tests described in **160 Fuel Tank and Fuel Pump**.

The fuel pressure created by the fuel pump is controlled by a pressure regulator that returns excess fuel to the tank. Any change in fuel pressure will cause a change in the base air-fuel mixture delivered to the engine. If the fuel pressure is too low, the base air-fuel mixture will be lean. If the fuel pressure is too high, the base mixture will be rich. Fuel pressure tests are described in **160 Fuel Tank and Fuel Pump**.

NOTE —

Fuel pressure tests require a pressure gauge. If this tool is not available, the tests can be performed by an authorized BMW dealer or other qualified shop.

Properly operating fuel injectors play a major role in fuel delivery. The Motronic ECM switches the injectors on and off at the negative (–) or ground side of the connectors. Positive (+) battery voltage is always present at the connectors when the engine is running. An injector that fails or loses power will not open, creating a lean air-fuel mixture and causing the engine to run poorly when cold or stumble on acceleration. An injector that shorts to ground will remain open constantly when the engine is running, creating a rich air-fuel mixture that can dilute engine oil, foul the spark plugs, cause a rough idle, and eventually destroy the catalytic converter. See **130 Fuel Injection—DME** for fuel injection system troubleshooting and repair.

The fuel injectors must deliver the fuel in a fine, even, cone-shaped mist for optimum combustion. Restricted fuel injectors typically have poor spray patterns that result in overall driveability problems. Carbon deposits and fuel contaminants are the common causes of fuel injector restrictions. Severe injector fouling can be identified by deposit buildups on the injector tips; less extreme restrictions can be identified by checking the injector spray pattern.

Basic Requirements

The following list contains basic checks that should be made when experiencing driveability problems.

1. Check the intake (induction) system for leaks. Check for cracked, loose, or disconnected hoses and duct work. Check that all hose clamps are tight.

   NOTE —

   An air leak allows unmeasured air to enter the engine, often resulting in an in overly lean fuel mixture and causing driveability problems and an illuminated Check Engine light.

2. Check that the battery is in good condition. Check that the battery cables are tight and free of corrosion. Check that all related ground points are firmly connected and in good condition. Don't forget to check the main ground at the battery. Check all of the harness connectors for damage and corrosion. Check for power and ground at the DME ECM.

3. Check the fuses. Check for sufficient fuel in the tank. If the engine ran out of fuel, it will take a little time to restore fuel pressure. See **160 Fuel Tank and Fuel Pump.**

4. Check for spark at the spark plugs. If the tachometer needle bounces while the engine is cranked by the starter then the ignition system is probably working correctly. See **130 Ignition System–DME.**

5. Check for any faults through the on-board diagnostics system. See **On-Board Diagnostics**.

Table d lists additional symptoms of common engine driveability problems, their probable causes, and the suggested corrective actions. The entries in bold type in the corrective action column indicate the repair groups where applicable test and repair procedures can be found.

NOTE —

Most of the symptoms listed in **Table d** *will also cause the Check Engine light to come on. If the light is on, check for any stored faults as the first step in troubleshooting driveability complaints.*

Table d. Engine Driveability Troubleshooting

SYMPTOMS a. Engine fails to start b. Engine starts but stops immediately c. Erratic engine idle d. Poor engine response on acceleration e. Erratic engine operation in all speed ranges f. Excessive fuel consumption g. Poor engine power, fails to rev up h. CO content too low i. CO content too high									CAUSES	CORRECTIVE ACTION
a									Fuel pump faulty	Test fuel pump. Repair Group **160**
a				e					DME ignition system faulty	Test ignition system. Repair Group **120**
a									DME main relay or fuel pump relay faulty	Test main relay. Repair Group **130**
a									DME speed/reference sensor faulty	Test speed/reference sensor. **120**
a	b	c					h	i	Idle stabilizer valve faulty	Test idle stabilizer valve. Repair Group **130**
		c	d	e					Throttle position switch or sensor faulty or idle signal to DME control module missing.	Test throttle position switch/sensor and adjust if necessary. Repair Group **130**
		c	d				h	i	Air flow or mass air flow sensor faulty	Test air flow or mass air flow sensor. Repair Group **130**
a	b	c	d	e			h		Large air intake system leak	Check for major intake air leaks downstream of air flow or mass meter.
a		c	d	e		g	h		Fuel pressure too low	Test fuel pressure. Repair Group **130**
		c			f			i	Fuel pressure too high	Test fuel pressure. Repair Group **130**
			d	e		g	h		Fuel pump delivery volume too low	Test fuel pump delivery volume. Repair Group **130**
a		c		e	f		h	i	Coolant temperature sensor faulty	Test coolant temperature sensor. Repair Group **130**
		c			f				Oxygen sensor faulty	Test oxygen sensor. Repair Group **130**
		c		e	f			i	Fuel injectors leaking	Check fuel injectors and replace leaking injectors. Repair Group **130**
									Throttle plate binding or incorrectly adjusted	Check throttle plate and adjust if necessary. Repair Group **130**
a		c							Electrical connections loose, broken, or corroded	Visually inspect connectors and correct any faults. Repair Group **600**
a		c	d						Ground connections loose, broken, or corroded	Visually inspect ground connections and correct any faults. Repair Group **600**
		c		e	f				CO content too high	Test air flow or mass air flow sensor. Repair Group **130**
a	b	c	d	e		g			CO content too low	Test air flow or mass air flow sensor. Repair Group **130**
	b	c	d	e	f	g	h	i	Input signals to DME Motronic ECM missing, ECM in limp home mode	Make electrical tests at DME ECM connector. Repair Group **130**
a	b	c	d	e	f	g	h	i	DME Motronic ECM faulty	Test DME ECM inputs. If all inputs are correct, replace ECM. Repair Group **130**

110 Engine Removal and Installation

GENERAL 110-1

ENGINE REMOVAL AND INSTALLATION 110-1
Removing and installing engine (M20 engine). . 110-1
Removing and installing engine (M50 engine) . . 110-4
Removing and installing engine (M30 engine) . . 110-9
Removing and installing engine (M60 engine) . 110-12

GENERAL

Some special tools are required for removal and installation of the engine. Be sure to have the necessary equipment on hand before starting the job.

> ***WARNING —***
> *Engine removal requires disconnecting the battery. This may erase any system fault code(s) that have been stored in control unit memories. Check for fault codes prior to disconnecting the battery cables. If the Check Engine light is illuminated with the engine running, see* **100 Engine—General** *for On-board diagnostic fault code information. If any other system faults have been detected (indicated by an illuminated ANTI LOCK, SRS, EML or ASC/ ASC+T warning light), see the appropriate repair group in this manual or an authorized BMW dealer for more information on fault codes.*

ENGINE REMOVAL AND INSTALLATION

Engine removal procedures are organized according to engine code. For engine code and application information, see **100 Engine—General**. Label all components, wires, and hoses before removing them as an aid to installation.

Removing and installing engine (M20 engine)

1. Disconnect the battery cables and then remove the battery from the car. Remove the battery tray.

> ***WARNING —***
> *Disconnecting the battery cables may erase fault codes stored in control unit memory.*

2. Remove the transmission from the car. See **230 Manual Transmission** or **240 Automatic Transmission**.

3. Remove the front exhaust pipes from the exhaust manifolds. See **180 Exhaust System**.

4. Drain the engine coolant from the engine block and from the radiator. **170 Radiator and Cooling System**.

> ***NOTE —***
> *The block drain is on the exhaust side of the engine, below cylinder no. 5.*

5. On cars with automatic transmission, disconnect the ATF cooler lines from the radiator. Cap off the open lines. Remove the front and rear brackets holding the cooler lines to the engine block.

6. Remove the radiator and the cooling fan. See **170 Radiator and Cooling System**.

> ***NOTE —***
> *The radiator cooling fan mounting nut (32 mm wrench) has left-hand threads.*

7. Disconnect the coolant hoses from the thermostat housing. Remove the coolant pipe from the front of the engine.

8. Disconnect the heater hose from the rear bulkhead and from the rear of the cylinder head as shown in Fig. 1.

9. Unhook the accelerator and cruise control cables from the throttle levers. Remove the cable bracket from the intake manifold. See Fig. 2.

10. Remove the V-belt from the A/C compressor and remove the compressor from its mounting bracket without disconnecting any refrigerant lines.

> ***NOTE —***
> *Move the A/C compressor out of the way without distorting or damaging any lines. Support the compressor by hanging it from the chassis using stiff wire.*

11. Remove the power steering pump V-belt and remove the pump from its mounting bracket. See Fig. 3. Use stiff wire to hang the pump from the body.

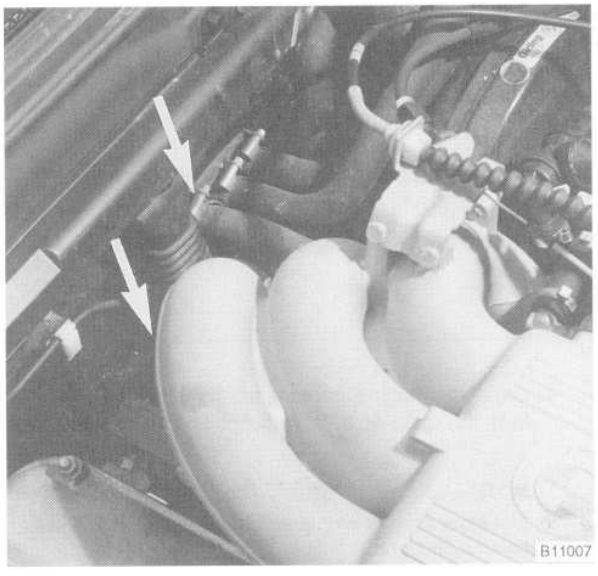

Fig. 1. Heater hoses at bulkhead and at rear of cylinder head (**arrows**).

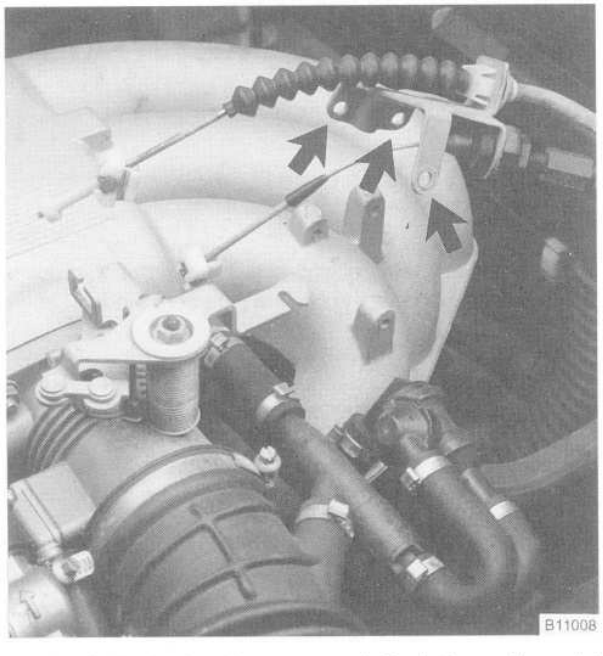

Fig. 2. Cable bracket shown removed. Bracket mounting points shown at arrows.

12. Remove the alternator cooling air duct work from the alternator and from the air cleaner housing.

13. Remove the large intake air hose from the air cleaner housing. Disconnect the electrical connector from the air flow sensor. Loosen the wire straps and remove the hose from the side of the air cleaner housing. Remove the air cleaner housing from the car. See Fig. 4.

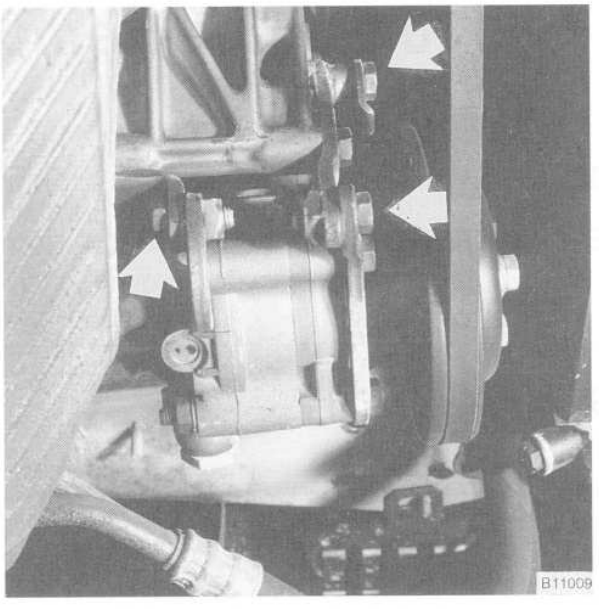

Fig. 3. Power steering pump mounting bolts (**arrows**).



Fig. 4. Air cleaner housing mounting nuts (**arrows**). Loosen nuts and lift out housing.

14. Label and then remove the fuel supply line from the fuel rail and the fuel return line from the pressure regulator. See Fig. 5.

> ***WARNING —***
> *Fuel may be expelled under pressure. Do not smoke or work near heaters or other fire hazards. Keep a fire extinguisher handy. Before disconnecting fuel hoses, wrap a cloth around fuel hoses to absorb any leaking fuel. Plug all open fuel lines.*

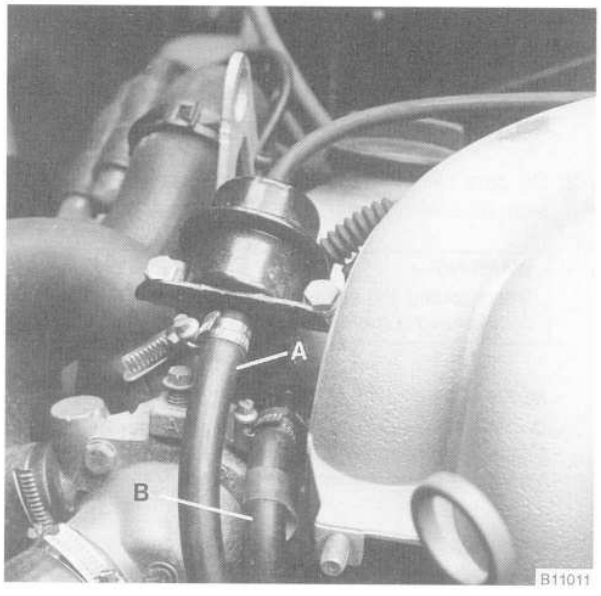

Fig. 5. Fuel return line (**A**) at fuel pressure regulator and fuel supply line (**B**) at fuel rail.

NOTE —

Some hoses may be secured with one-time hose clamps that are crimped with special pliers. These clamps should be replaced whenever they are loosened.

15. Remove the large hose from the brake system vacuum booster. Plug the opening in the vacuum booster.

16. Remove the wiring from the ignition coil and set it on top of the engine.

17. Working at the throttle housing, disconnect the electrical connector from the idle air stabilizer valve, the throttle switch, and the evaporative purge valve. Cut any wire ties holding the wires in place. Disconnect the tank venting hose from the charcoal canister. See Fig. 6.

18. Remove the two nuts holding the wiring harness bracket to the intake manifold. See Fig. 7. Lift the bracket off its mounting studs and disconnect the two electrical connectors from the underside of the bracket. Disconnect and then remove the connector in the middle of the bracket.

19. Disconnect the wiring from the starter and the alternator. Move the wiring out of the way. See **121 Battery, Starter, Alternator**.

20. Working near the rear of the alternator, disconnect the electrical connector for the oil level sensor.

21. Working directly below the right engine mount, disconnect the electrical connector from the oil pressure sensor.



Fig. 6. Disconnect throttle switch and purge valve harness connectors and fuel tank venting hose (**arrows**).

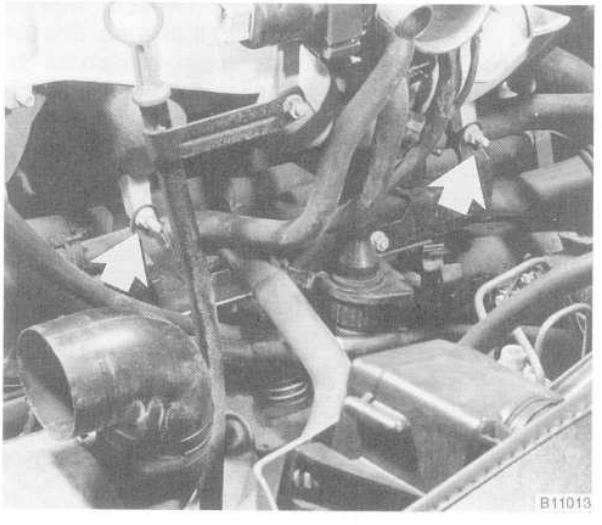

Fig. 7. Wiring harness bracket mounting nuts (**arrows**).

22. Install an engine lifting device, and raise the engine until its weight is supported. Remove the nuts and ground strap from the left and right engine mounts. See Fig. 8.

23. Carefully raise the engine out of the car, checking for any wiring, fuel lines, or mechanical parts that might become snagged as the engine is removed.

Installation is the reverse of removal. Engine mount tightening torques are listed below. Be sure the guide pins in the engine mounts correctly engage the alignment holes in the subframe as the engine is lowered into place.



Fig. 8. Right engine mount nut being removed. Also remove ground strap (**arrow**).

On cars with automatic transmission, use new O-rings at the ATF cooler lines. Adjust the tension of all V-belts. Change the engine oil and filter and check all other fluid levels. See **020 Maintenance Program**. Refill the cooling system as described in **170 Radiator and Cooling System**. Using new gaskets, install the front exhaust pipe as described in **180 Exhaust System**.

Tightening Torques

- ATF cooler lines to radiator (use new O-rings) . . . . . 20 Nm (15 ft-lb)
- Coolant drain plug to cylinder block . . . . . 40 Nm (30 ft-lb)
- Engine mount to engine bracket or subframe (M10) . . . . . 45 Nm (33 ft-lb)
- Exhaust pipe to exhaust manifold (use new nuts)

1st stage . . . . . 35 Nm (26 ft-lb)
2nd stage . . . . . 55 Nm (41 ft-lb)

- Radiator cooling fan to coolant pump . . . . . 40 Nm (30 ft-lb)
- Radiator drain screw to radiator 2.5 Nm (22 in-lb)
- Wiring to alternator (M8 nut) . . . . . 12 Nm (9 ft-lb)
- Wiring to starter

M6 nut . . . . . 5 Nm (44 in-lb)
M8 nut . . . . . 12 Nm (9 ft-lb)

Removing and installing engine (M50 engine)

1. Remove the transmission from the car. See **230 Manual Transmission** or **240 Automatic Transmission**.

2. On cars with the battery mounted beneath the rear seat, disconnect the negative (–) battery cable.

> ***WARNING —***
> *Disconnecting the battery cables may erase fault codes stored in control unit memory.*

> ***NOTE —***
> *On 1991 525i models, the battery is mounted in the engine compartment. On 1992 and later 525i models, the battery is mounted beneath the rear seat.*

3. On cars with the battery in the engine compartment, remove the battery from the car. Remove the battery tray mounting bolts and remove the tray. See Fig. 9.

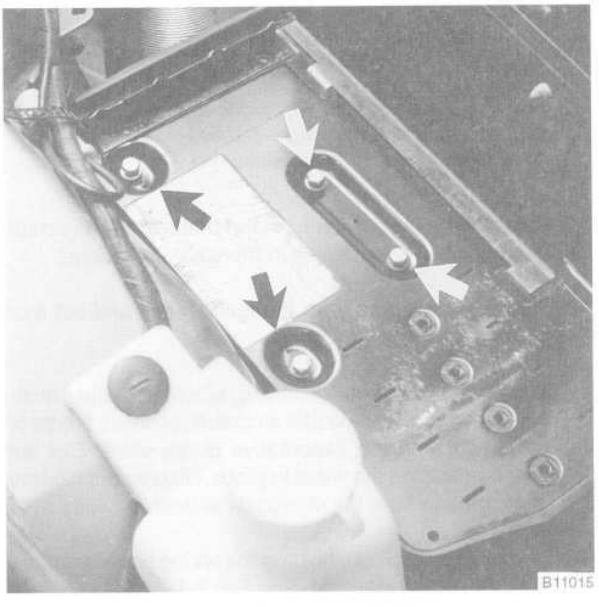

Fig. 9. Battery tray mounting bolts (**arrows**).

4. Remove the front exhaust pipes from the exhaust manifolds. See **180 Exhaust System**.

5. Drain the engine coolant from the engine block and from the radiator. See **170 Radiator and Cooling System**.

6. On cars with automatic transmission, disconnect the ATF cooler lines from the radiator. See Fig. 10. Cap off the open lines. Remove the front and rear brackets holding the cooler lines to the engine block.

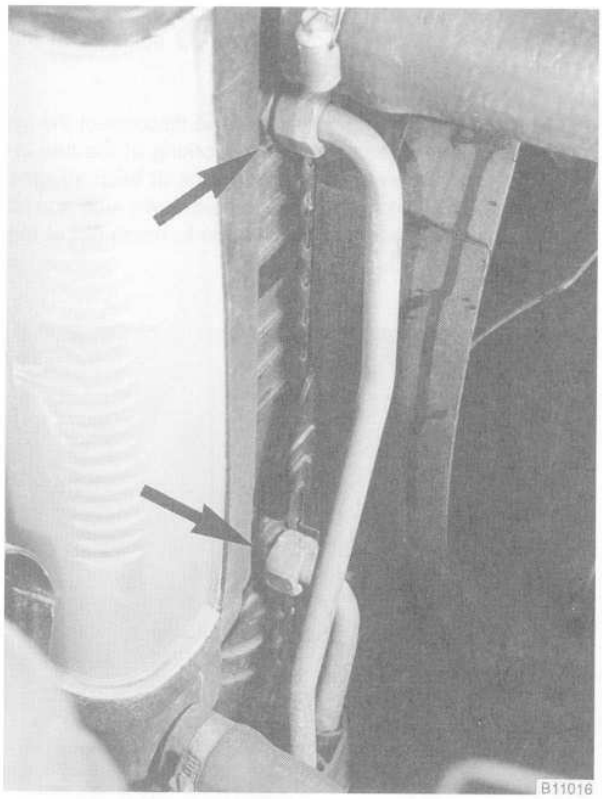

Fig. 10. ATF cooler lines at left side of radiator (**arrows**).

7. Remove the radiator and the radiator cooling fan as described in **170 Radiator and Cooling System**.

   NOTE —
   The radiator cooling fan mounting nut (32 mm wrench) has left-hand threads.

8. Remove alternator cooling air duct. Remove air cleaner housing complete with air mass sensor from the car, disconnecting and labeling connectors, ducting and hoses as necessary. See Fig. 11.

9. Disconnect the heater hose at the rear bulk head and at the heater valve. See Fig. 12.

10. Disconnect the throttle cable and the cruise control cable from the throttle lever. Pull the cables from the cable bracket. See Fig. 13.

11. If applicable, remove the plastic cover from atop the throttle housing.

12. Disconnect the large hose from the brake system vacuum booster. Plug the opening in the vacuum booster.

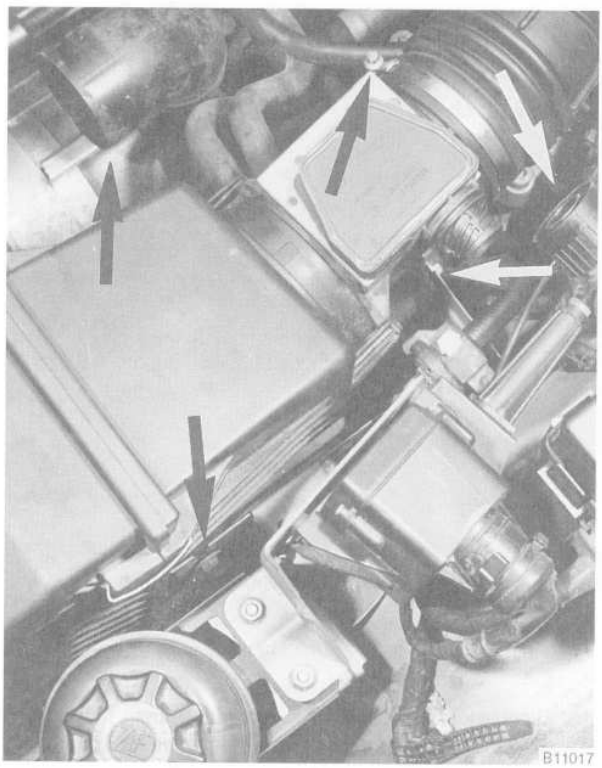

Fig. 11. Alternator cooling air duct, air mass sensor connector, air duct hose clamp, and air cleaner housing mounting bolts (**arrows**).

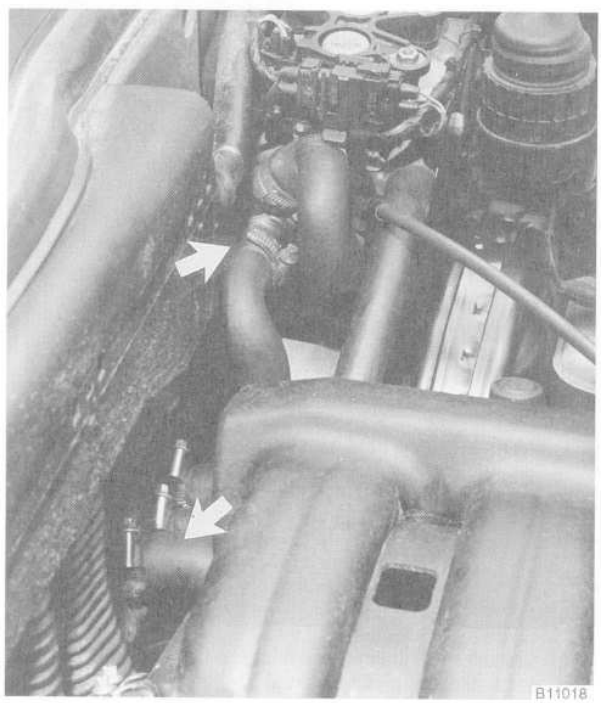

Fig. 12. Heater hoses at bulk head and heater valve (**arrows**) to be disconnected.

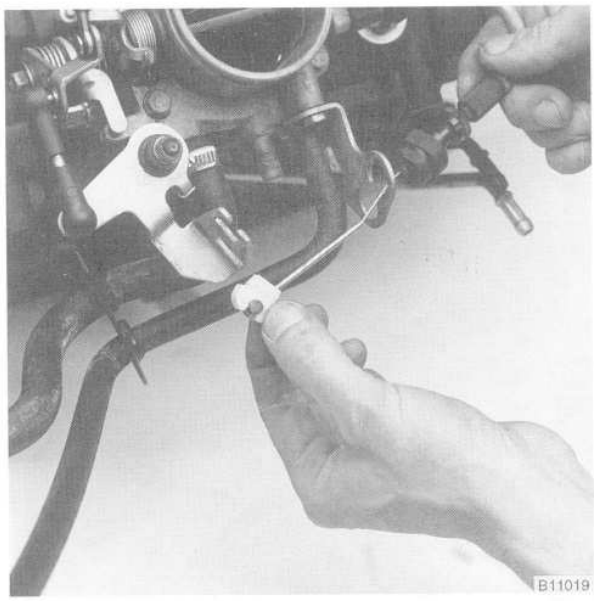

Fig. 13. Throttle cable being removed. Disconnect cable at lever and pull cable with grommet from bracket.

13. Disconnect the crankcase ventilation hose fitting from the cylinder head cover. Remove the wiring cover from the front of the cylinder head and then remove the ground wire shown in Fig. 14.

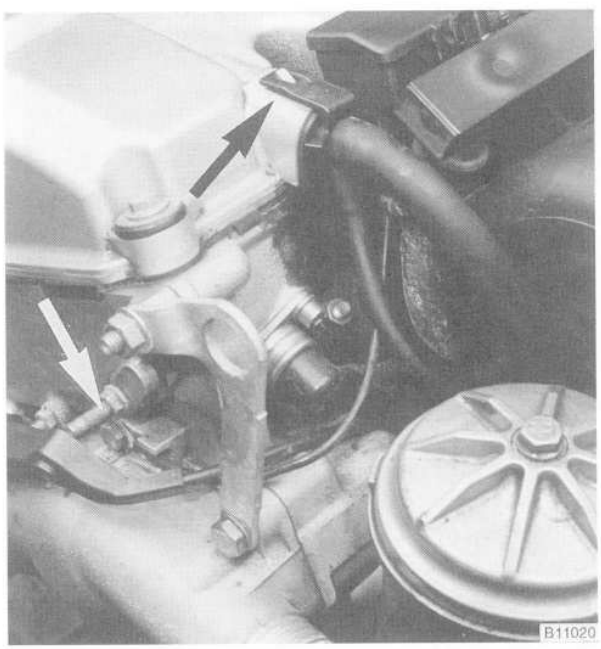

Fig. 14. Crankcase ventilation hose fitting and ground wire (**arrows**) to be disconnected and removed.

14. On 1993 and later cars with VANOS, disconnect the harness connector from the VANOS solenoid at the front of the cylinder head.

15. Remove the top engine covers and disconnect the ignition coil harness connectors. Working at the fuel injectors, pry open the small wire clips at each injector. Remove the two main harness hold-down nuts and lift the entire harness away. Place the harness out of the way. See Fig. 15.

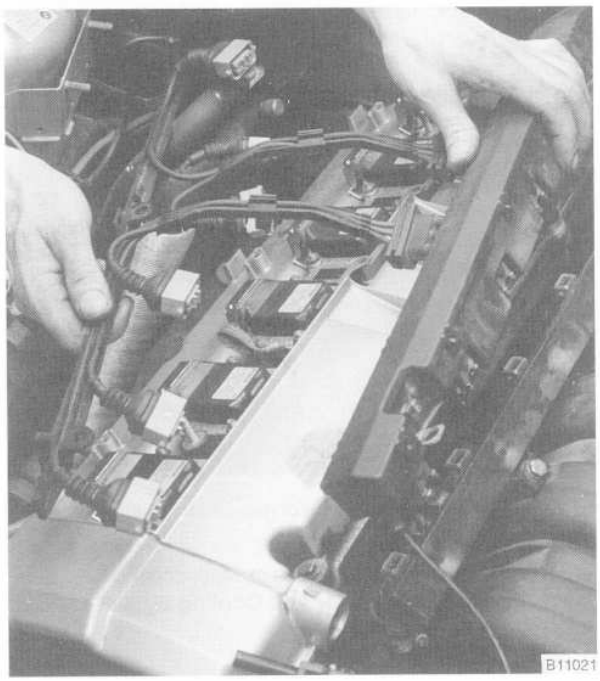

Fig. 15. Remove main harness from top of engine and place at base of windshield.

16. Label and disconnect the coolant hose and throttle switch connector from the throttle housing. Disconnect the connector from the intake air temperature sensor. See Fig. 16.

17. Disconnect the vacuum hose from the purge valve on the left-hand fender.

18. Working from underside of the intake manifold, carefully disconnect the large idle air hose from the intake manifold. See Fig. 17.

> ***CAUTION —***
> *Use care when disconnecting the idle control hose fitting from the manifold. The retaining clip on the fitting is fragile.*

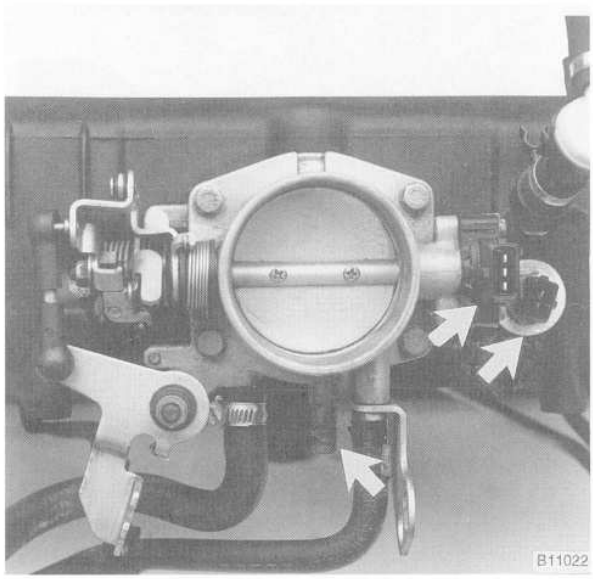

Fig. 16. Coolant hose, throttle switch connector, and intake air temperature sensor connector (**arrows**) to be removed or disconnected.



Fig. 18. Fuel return line (**A**) and fuel supply line (**B**). Label fuel lines before disconnecting them. Remove bracket mounting to free lines (**arrow**).

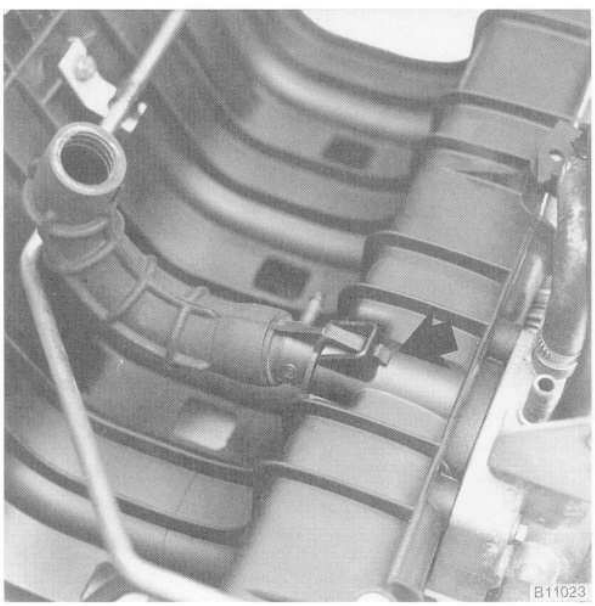

Fig. 17. Idle air control hose at underside of intake manifold. Carefully depress clip (**arrow**) and pull out hose fitting.

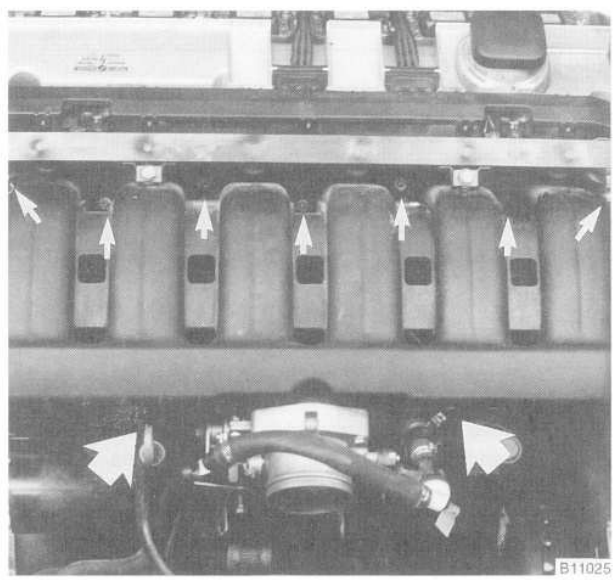

Fig. 19. Intake manifold mounting nuts. Also remove two bolts from support brackets (**arrows**).

19. Working at the rear of the intake manifold, label and then remove the fuel supply and the fuel return lines. See Fig. 18. Disconnect the lines from the support bracket on the manifold.

20. Remove the intake manifold from the engine by removing the seven mounting nuts from above and the two mounting bracket bolts from below. See Fig. 19.

> ***WARNING —***
> *Fuel may be expelled under pressure. Do not smoke or work near heaters or other fire hazards. Keep a fire extinguisher handy. Before disconnecting fuel hoses, wrap a cloth around fuel hoses to absorb any leaking fuel. Plug all open fuel lines.*

21. Disconnect the harness connectors shown in Fig. 20.



A. Coolant temperature sensor
B. Temperature gauge sender
C. Idle air control valve
D. Oil pressure switch
E. Reference/speed sensor
F. Cylinder identification sensor
G. Oxygen sensor harness connector

Fig. 20. Harness connectors to be disconnected.

> ***CAUTION —***
> *Stuff clean rags into the open intake ports to prevent any parts from falling into the engine intake.*

22. Disconnect the harness connector from the oil level sensor.

> ***NOTE —***
> *The oil level sensor is mounted in the top of the oil pan.*

23. Remove the poly-ribbed drive belts. See Fig. 21.

24. Remove the A/C compressor from its mounting bracket without disconnecting any refrigerant lines. See Fig. 22.

25. Move the A/C compressor out of the way without distorting or damaging any lines. Support the compressor by hanging it from the chassis using stiff wire.

26. Remove the power steering pump from its mounting bracket. See Fig. 23. Use stiff wire to hang the pump from the body.

27. Disconnect the wiring from the starter and the alternator. Move the wiring harness out of the way. See **121 Battery, Starter, Alternator**.



Fig. 21. Poly-ribbed drive belt being removed. Turn 8 mm hex wrench clockwise to relieve belt tension and then slip belt off pulley.



Fig. 22. A/C compressor mounting bolts (**arrows**).

28. Install an engine lifting device, and raise the engine until its weight is supported. Remove the nuts and ground strap from the left and right engine mounts.

29. Carefully raise the engine out of the car, checking for any wiring, fuel lines, or mechanical parts that might become snagged as the engine is removed.

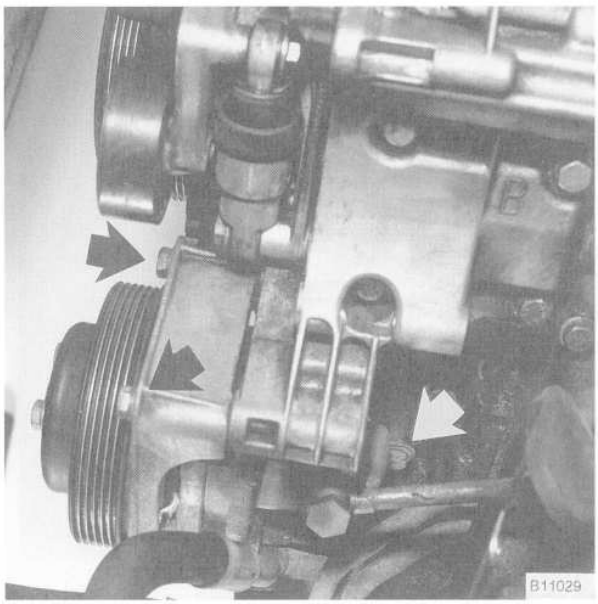

Fig. 23. Power steering pump mounting bolts (**arrows**).

NOTE —

A rear lifting eye is not installed on the M50 engine, but a lifting eye for the M50 engine is available as a special tool from an authorized BMW dealer (BMW special tool no. 11 0 030). The lifting eye passes through the intake manifold (where installed) and threads into a tapped hole in the rear of the cylinder block.

Installation is the reverse of removal. Engine mount tightening torques are listed below.

On cars with automatic transmission, use new O-rings at the ATF cooler lines. During installation, be sure the engine drive belts properly engage the pulley grooves. Change the engine oil and filter and check all other fluid levels as described in **020 Maintenance Program**. Refill the cooling system as described in **170 Radiator and Cooling System**. Install the front exhaust pipes using new gaskets. See **180 Exhaust System**.

Tightening Torques

- ATF cooler lines to radiator (use new O-rings) . . . . . 20 Nm (15 ft-lb)
- Coolant drain plug to cylinder block . . . . . 40 Nm (30 ft-lb)
- Engine mount to engine bracket or subframe (M10) . . . . . 45 Nm (33 ft-lb)
- Exhaust pipe to exhaust manifold (use new nuts)

1st stage . . . . . 35 Nm (26 ft-lb)
2nd stage . . . . . 55 Nm (41 ft-lb)

- Intake manifold to cylinder head . . . . . 15±2 Nm (11±1 ft-lb)
- Radiator cooling fan to coolant pump . . . . . 40 Nm (30 ft-lb)
- Radiator drain screw to radiator . 2.5 Nm (22 in-lb)
- Wiring to alternator (M8 nut) . . . . . 12 Nm (9 ft-lb)
- Wiring to starter

M6 nut . . . . . .5 Nm (44 in-lb)
M8 nut . . . . . 12 Nm (9 ft-lb)

Removing and installing engine (M30 engine)

1. Working beneath the rear seat, disconnect the negative (–) battery cable from the battery.

> *WARNING —*
> *Disconnecting the battery cables may erase fault codes stored in control unit memory.*

2. Remove the transmission from the car. See **230 Manual Transmission** or **240 Automatic Transmission**.

NOTE —

On cars with automatic transmission, remove the ATF cooler lines bracket from the side of the engine oil pan.

3. Remove the front exhaust pipe from the exhaust manifold. See **180 Exhaust System**.

4. Drain the engine coolant from the engine block and from the radiator. See **170 Radiator and Cooling System**.

5. Disconnect the coolant hoses from the radiator. On cars with automatic transmission, carefully disconnect the ATF cooler lines from the radiator. Cap off the open ATF lines.

6. Working at the rear of the engine compartment, disconnect the hoses at the coolant expansion tank. Disconnect the electrical connector for the coolant level sensor. Remove the expansion tank from the car.

7. Remove the radiator and the cooling fan. See **170 Radiator and Cooling System**.

   NOTE —
   The radiator cooling fan mounting nut (32 mm wrench) has left-hand threads.

8. Disconnect the heater hoses from the heater valve and heater core. See Fig. 24.

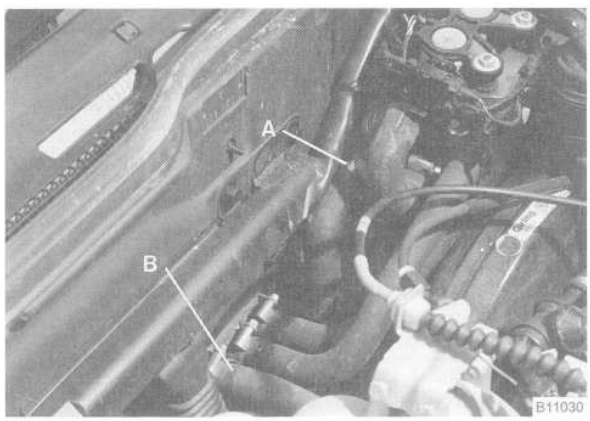

Fig. 24. Heater hoses at heater valve (**A**) and heater core (**B**).

9. Unhook the accelerator and cruise control cables from the throttle levers. Remove the cable bracket from the intake manifold. See Fig. 25.

10. Remove the V-belt from the A/C compressor and remove the compressor from its mounting bracket without disconnecting any refrigerant lines.

    NOTE —
    Move the A/C compressor out of the way without distorting or damaging any lines. Support the compressor by hanging it from the chassis using stiff wire

11. Remove the power steering pump V-belt and remove the pump from its mounting bracket. Leave all hoses connected. Use stiff wire to hang the pump from the body.

12. Remove the intake air hoses/ducts from the air flow sensor and from the alternator. Disconnect the electrical connector from the air flow sensor. Remove the air flow sensor by removing the three retaining clips from below. See Fig. 26.

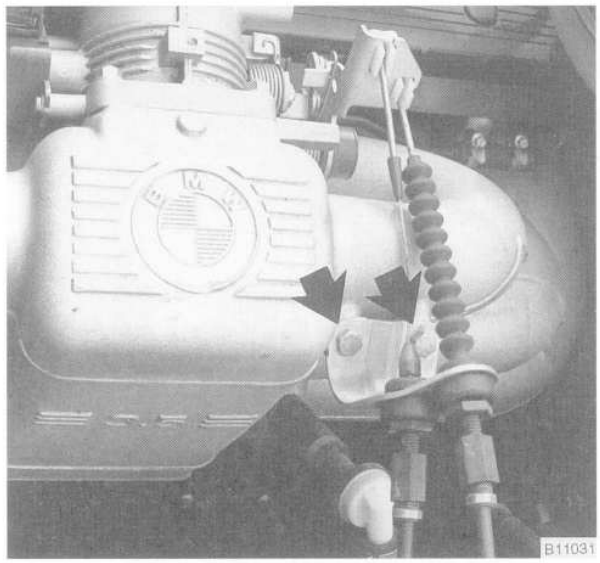

Fig. 25. Throttle, accelerator, and cruise control cable bracket mounting bolts (**arrows**).

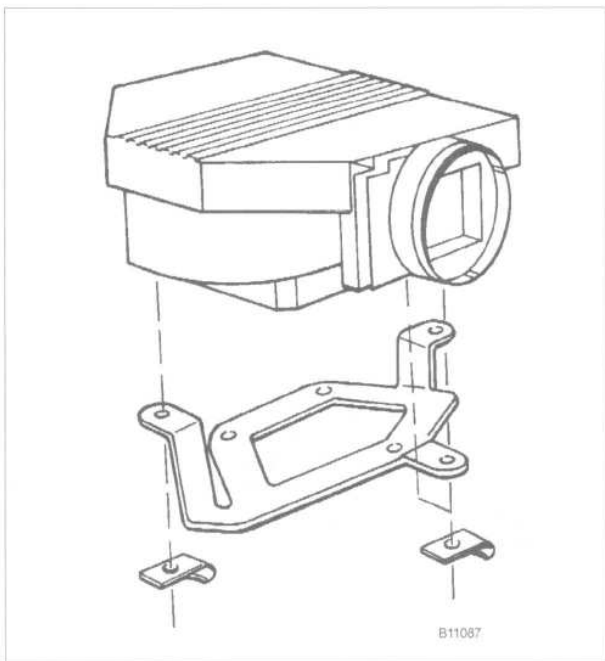

Fig. 26. Air flow sensor retaining clips. Slide clips off pin to remove.

13. Remove the air cleaner housing and duct work, loosening hose and mounting clamps as necessary.

14. Disconnect the high tension lead from the ignition coil.

15. Working at the side of the cylinder head, disconnect the electrical connectors shown in Fig. 27.

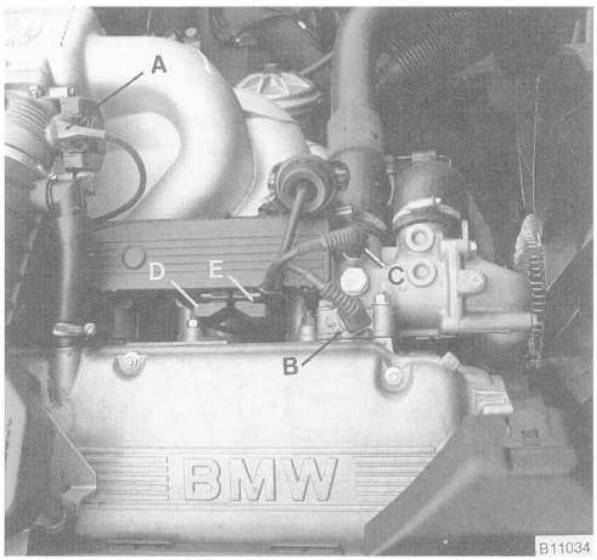

A. Throttle switch
B. Coolant temperature sensor
C. Temperature gauge sender
D. Engine speed/reference point sensor
E. Cylinder identification sensor

Fig. 27. Harness connectors to be disconnected.

16. Disconnect the electrical connector from the oil pressure switch at the left rear corner of the cylinder head.

17. Disconnect the tank venting hose from the charcoal cannister on the left fender. Disconnect the wires from the starter motor and the alternator. See **121 Battery, Starter, Alternator**.

18. Working beneath the intake manifold, disconnect the electrical connectors for the oxygen sensor, the oil level sensor, and the evaporative purge valve.

19. Label and then remove the fuel supply line and the fuel return line. See Fig. 28.

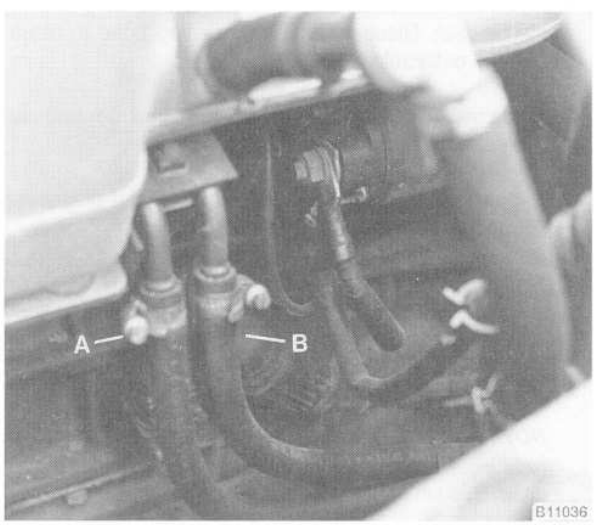

Fig. 28. Fuel return line (**A**) and fuel supply line (**B**).

> ***WARNING —***
> *Fuel may be expelled under pressure. Do not smoke or work near heaters or other fire hazards. Keep a fire extinguisher handy. Before disconnecting fuel hoses, wrap a cloth around fuel hoses to absorb any leaking fuel. Plug all open fuel lines.*

20. Remove the large hose from the brake system vacuum booster. Plug the opening in the vacuum booster.

21. Remove the access plugs and mounting nuts from the fuel injection wiring harness bracket. See Fig. 29. Lift the bracket and harness off and set it aside.



Fig. 29. Wiring harness bracket cover plugs (**arrows**).

22. Working under the car, remove the nuts and ground strap from the engine mounts.

23. Install an engine lifting device, using the front and rear lifting points. Carefully raise the engine out of the car, checking for any wiring, fuel lines, or mechanical parts that might become snagged as the engine is removed.

Installation is the reverse of removal. Engine mount tightening torques are listed below. Check that the guide pins in the engine mounts correctly engage the alignment holes in the subframe as the engine is lowered into place.

Adjust the tension of all V-belts. Change the engine oil and filter and check all other fluid levels See **020 Maintenance Program**. Refill the cooling system as described in **170 Radiator and Cooling System**. Using new gaskets, install the front exhaust pipe as described in **180 Exhaust System**.

Tightening Torques—M30 engine

- ATF cooler lines to radiator (use new O-rings) . . . . . 20 Nm (15 ft-lb)
- Coolant drain plug to cylinder block40 Nm (30 ft-lb)
- Engine mount to engine bracket or subframe (M10) . . . . . 45 Nm (33 ft-lb)
- Exhaust pipe to exhaust manifold (use new nuts)

1st stage . . . . tighten evenly 10±2 Nm (89±12 in-lb)
2nd stage . . . . . loosen nuts 1½ turn

- Radiator cooling fan to coolant pump . . . . . 40 Nm (30 ft-lb)
- Radiator drain screw to radiator 2.5 Nm (22 in-lb)
- Wiring to alternator (M8 nut) . . . . . 12 Nm (9 ft-lb)
- Wiring to starter

M6 nut . . . . . 5 Nm (44 in-lb)
M8 nut . . . . . 12 Nm (9 ft-lb)

Removing and installing engine (M60 engine)

1. Working from beneath rear seat, disconnect negative (–) battery cable from battery.

> ***WARNING —***
> *Disconnecting the battery cables may erase fault codes stored in control unit memory.*

NOTE —
On 1992 and later cars, the battery is mounted beneath the rear seat.

2. Working beneath car, remove heat shields from left and right side of front suspension crossmember. Remove front exhaust pipes from exhaust manifolds. See **180 Exhaust System**.

3. Remove harness connector from oil level sensor in oil pan. Disconnect wiring from wiring guide.

4. Remove transmission. See **230 Manual Transmission** or **240 Automatic Transmission**.

5. Drain engine coolant from engine block and radiator. Remove radiator and radiator cooling fan. See **170 Radiator and Cooling System**.

NOTE —
- *The radiator cooling fan mounting nut (32 mm wrench) has left-hand threads.*
- *On cars with automatic transmission, cap off the open ATF cooler lines. Remove any brackets holding the lines to the engine block.*

6. Remove coolant expansion tank from rear of engine compartment, disconnecting hoses and electrical connector.

7. Loosen poly-ribbed drive belt tensioner mounting nuts. Remove the drive belt. See Fig. 30.

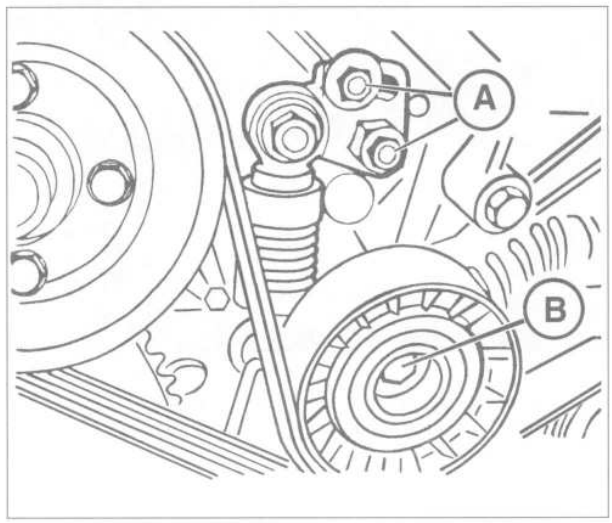

0011908

Fig. 30. Drive belt tensioner mounting nuts (**A** and **B**).

8. Remove alternator. See **121 Battery, Starter, Alternator**.

9. Disconnect wiring leads from starter and alternator at positive (+) battery junction block in rear of engine compartment. See **121 Battery, Starter, Alternator**.

10. Remove upper section of air cleaner housing complete with air mass sensor, disconnecting and labeling connectors, ducting and hoses as necessary.

11. Disconnect throttle cable from throttle housing and cable bracket. Disconnect EVAP venting hose from underside of throttle housing.

12. Disconnect vacuum hose from brake vacuum booster. Plug opening in vacuum booster.

13. Separate main wiring harness plug. Unclip diagnostic connector from bracket. See Fig. 31.

14. Remove plastic cover from center of engine. Remove left and right plastic covers from above cylinder head covers. Disconnect harness connectors from ignition coils. Remove ignition coils.

NOTE —
Note ground strap at cylinders #3 and #7. See **120 Ignition System—DME**.

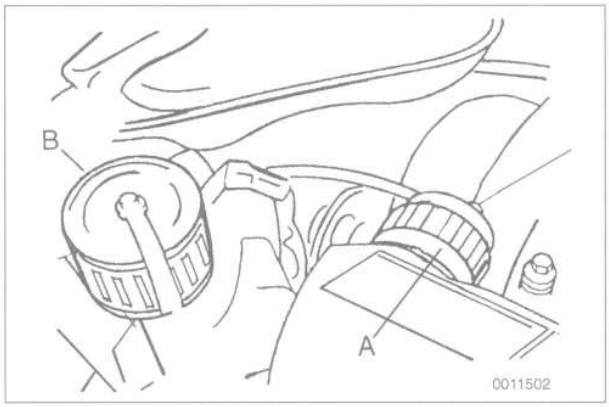

Fig. 31. Main engine wiring harness connector (**A**) and diagnostic connector (**B**) at rear of engine compartment.

15. Working in center of engine, disconnect and label all harness connectors from left and right wiring harness ducting.
    - knock sensors–do not interchange connectors
    - TDC sensor
    - intake air temperature sensor
    - throttle potentiometer
    - camshaft position sensor
    - idle actuator

> ***CAUTION —***
> *Do not interchange the knock sensor harness connectors. Serious engine damage may result. Be sure to label the connectors to ensure correct reconnection.*

16. Unbolt wiring harness ducting from left and right cylinder heads. Remove ducting from cylinder heads and lay to one side.

17. Remove ground wire from engine lifting bracket and disconnect harness connectors from engine coolant temperature sensors at rear of engine. See Fig. 32.

18. Disconnect harness connector from oil pressure switch at oil filter housing. Unclip wire from wiring guide.

19. Remove power steering pump from pump bracket without disconnecting any lines. Use stiff wire to hang pump from body. See **320 Steering and Wheel Alignment**.

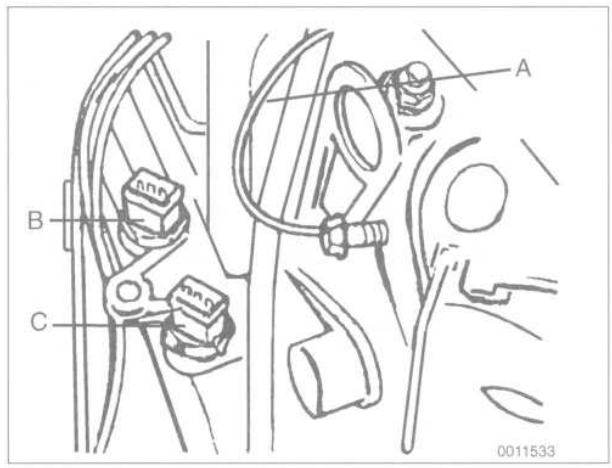

Fig. 32. Ground wire for ignition coils (**A**) and coolant temperature sensors (**B**, white connector, **C**, black connector).

20. Remove A/C compressor from its mounting bracket without disconnecting any refrigerant lines. Use stiff wire to hang compressor from body.

> ***CAUTION —***
> *The A/C refrigerant lines must not be loosened or disconnected. Use care to avoid kinking or bending refrigerant lines.*

21. Disconnect fuel supply line and fuel return line from fuel injector rail.

> ***WARNING —***
> *Fuel may be expelled under pressure. Do not smoke or work near heaters or other fire hazards. Keep a fire extinguisher handy. Before disconnecting fuel hoses, wrap a cloth around fuel hoses to absorb any leaking fuel. Plug all open fuel lines.*

22. Disconnect all coolant hoses from coolant cross-pipe (accumulator) at rear of the engine.

23. Install engine lifting device to front and rear lifting points Raise engine slightly until its weight is supported.

24. Remove nuts from left and right engine mounts. Disconnect ground strap from engine mount bracket. Carefully raise engine out of car.

> ***NOTE —***
> *Checking for any wiring, fuel lines, or mechanical parts that might become snagged as engine is removed.*

Installation is the reverse of removal, noting the following during installation:

- On cars with automatic transmission, use new O-rings at the ATF cooler lines.
- Be sure engine drive belts properly engage pulley grooves. When installing belt, preload tensioner to stop (toward belt), then tighten tensioner clamping nut.
- Change engine oil and filter. Check all other fluid levels as described in **020 Maintenance Program**.
- Refill and bleed cooling system as described in **170 Radiator and Cooling System**.
- Install the front exhaust pipes using new gaskets and copper paste and new mounting hardware. See **180 Exhaust System**.
- Be sure harness connectors are correctly installed, especially at knock sensors. Incorrect installation of connectors at knock sensors may result in serious engine damage.

Tightening Torques

- ATF cooler lines to radiator (use new O-rings)
  M 18 cap nut . . . . . 20 Nm (15 ft-lb)
  M 22 cap nut . . . . . 22 Nm (17 ft-lb)
- Coolant drain plug
  to cylinder block (M14). . . . . 28 Nm (21 ft-lb)
- Engine mount to engine bracket
  or subframe (M10) . . . . . 47 Nm (35 ft-lb)
- Radiator cooling fan to
  coolant pump (left-hand threads). . 40 Nm (30 ft-lb)
- Radiator drain screw to radiator. . 2.5 Nm (22 in-lb)
- Wiring to alternator (M8 nut) . . . . .13 Nm (9.5 ft-lb)
- Wiring to starter
  terminal 30h (M5). . . . . .5 Nm (44 in-lb)
  terminal 50 (M6). . . . . .6 Nm (44 in-lb)
  terminal 30 (M8). . . . . 12 Nm (9 ft-lb)

113 Cylinder Head Removal and Installation

GENERAL 113-1

REMOVING AND INSTALLING CYLINDER HEAD

To remove cylinder head (M20 engine) 113-1
To install cylinder head (M20 engine) 113-3
To remove cylinder head (M50 engine) 113-4
To install cylinder head (M50 engine) 113-11
To remove cylinder head (M30 engine) 113-14
To install cylinder head (M30 engine) 113-17
To remove cylinder head (M60 engine, left cylinder head) 113-19
To install cylinder head (M60 engine, left cylinder head) 113-21
To remove cylinder head (M60 engine, right cylinder head) 113-22
To install cylinder head (M60 engine, right cylinder head) 113-2412

GENERAL

The information given in this repair group assumes that the engine is installed in the engine bay. For cylinder head, camshaft, and valvetrain disassembly and reconditioning information, see **116 Cylinder Head and Valvetrain.**

REMOVING AND INSTALLING CYLINDER HEAD

The procedures given below are organized according to engine code. If necessary, see **100 Engine—General** for engine code and application information.

NOTE —
If a head gasket problem is suspected, a compression test will usually detect a faulty gasket. See **100 Engine—General** *for compression testing information.*

To remove cylinder head (M20 engine)

1. Disconnect the negative (–) terminal of the battery.

CAUTION —
Disconnecting the battery cables may erase fault codes stored in control unit memory.

2. With the engine cold, drain the engine coolant from the cylinder block and the radiator. See **170 Radiator and Cooling System**.

CAUTION —
Allow the cooling system to cool before opening or draining the system. Hot coolant can scald and burn.

NOTE —
The block drain is on the exhaust side of the engine, near cylinder no. 5.

3. Remove all coolant hoses from the thermostat housing. Remove the metal coolant cross pipe from the front of the cylinder head. Remove the heater hose from the rear of the cylinder head.

4. Loosen the front exhaust pipe clamp at the transmission and remove the front exhaust pipes from the manifolds. Discard the nuts.

5. Label and then disconnect the hoses, connectors, and fasteners shown in Fig. 1. Move all hoses and harnesses out of the way, cutting wire ties and removing brackets as necessary. Disconnect the throttle, accelerator, and cruise control cables from the throttle lever.

NOTE —
Some hoses may be secured with one-time crimp-type hose clamps. The clamps may be pried loose with a small screwdriver. Replace the clamps with standard screw-type clamps.

6. Disconnect the large vacuum hose from the brake vacuum booster. Plug the opening in the vacuum booster.

7. Loosen the air cleaner housing mounting nuts. Unclip the coolant hose from the side of the air cleaner housing. Remove the alternator cooling duct. Lift the air cleaner housing out of the engine compartment.

8. Disconnect the harness connectors and remove the components shown in Fig. 2. Move all harnesses and connectors out of the way.

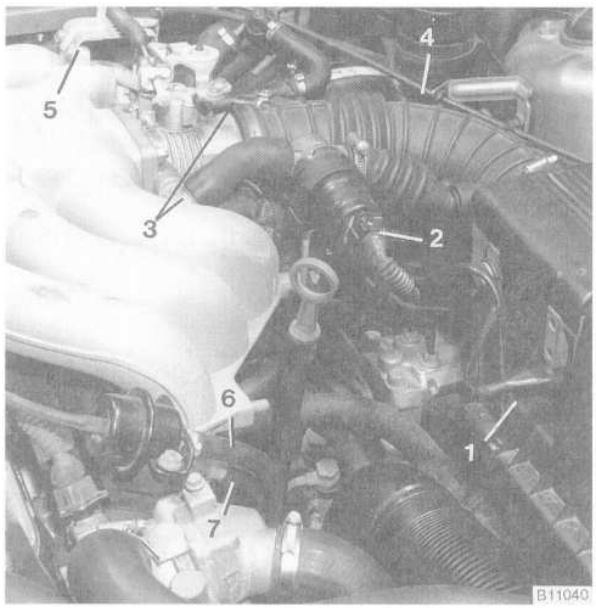

1. Air flow sensor connector
2. Idle control valve connector
3. Vacuum hoses
4. Intake air duct
5. Throttle, accelerator, and cruise control bracket
6. Fuel return hose
7. Fuel supply hose

Fig. 1. Components, hoses, and connectors on M20 engine.

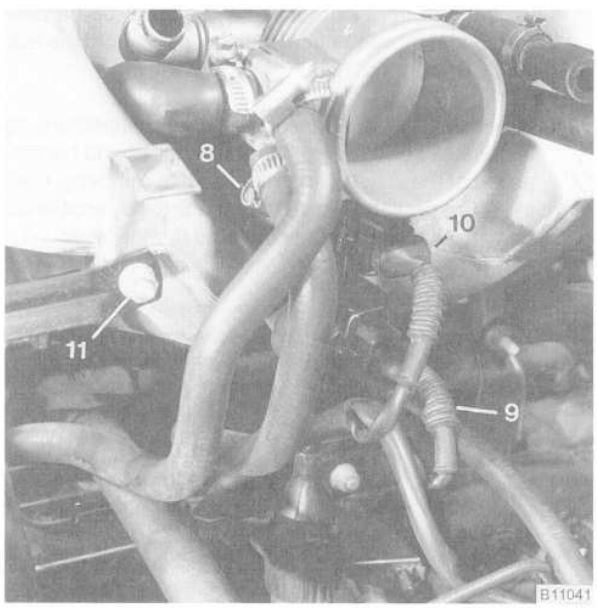

8. Coolant hose
9. Evaporative purge valve connector and vent hose
10. Throttle switch connector
11. Dipstick tube mounting nut

Fig. 2. Harness connectors, wiring, and components on M20 engine.

9. Disconnect the main harness connector at the bracket beneath the intake manifold and remove connector from the bracket. Remove the bracket mounting nuts. Pull the wiring bracket off the mounting studs. See Fig. 3.

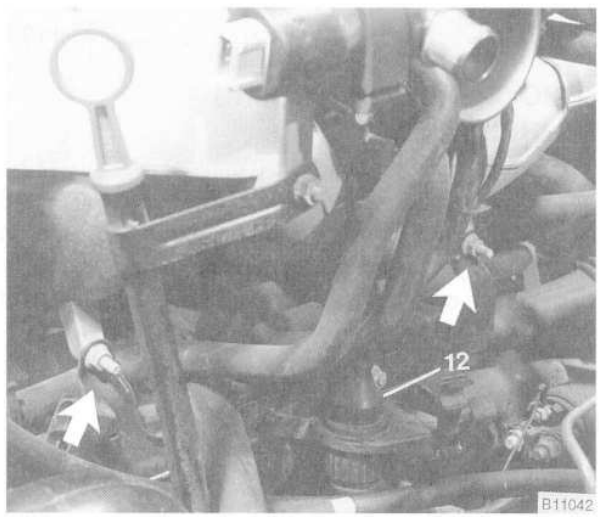

Fig. 3. Main wiring harness connector bracket under intake manifold (**12**). Also remove bracket mounting nuts (**arrows**).

10. Remove the radiator cooling fan and the radiator fan shroud. See **170 Radiator and Cooling System**.

NOTE —

The radiator cooling fan nut (32 mm wrench) has left-hand threads.

11. Remove the distributor cap, spark plug wires, and the distributor rotor as described in **120 Ignition System—DME**.

12. Remove the intake manifold support bracket. Remove the cylinder head cover mounting nuts. See Fig. 4. Disconnect the PCV hose from the cover and remove the cover.

13. Set the engine to TDC and remove the camshaft drive belt from the camshaft sprocket as described in **118 Camshaft Timing Belt**.

CAUTION —

- *Do not rotate the crankshaft while the timing belt is removed. The pistons can hit the valves and cause engine damage.*
- *The timing belt must be replaced any time belt tension is relieved.*

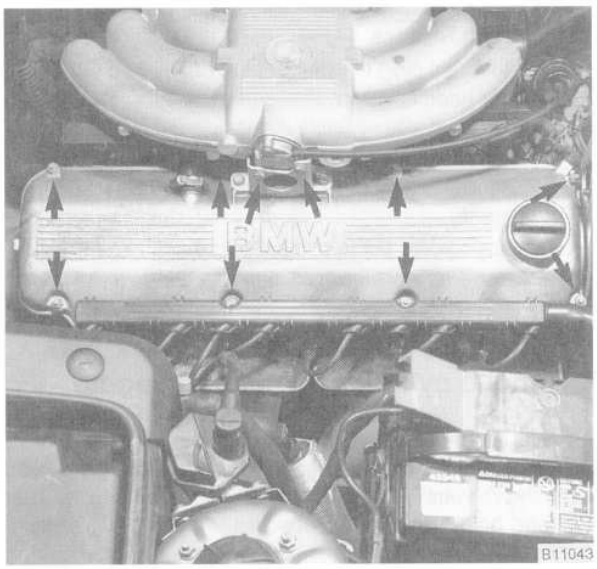

Fig. 4. Intake manifold support bracket and cylinder head cover mounting nuts and bolts (**arrows**).

14. Gradually and evenly loosen and remove the cylinder head bolts using the sequence shown in Fig. 5. Remove the cylinder head.

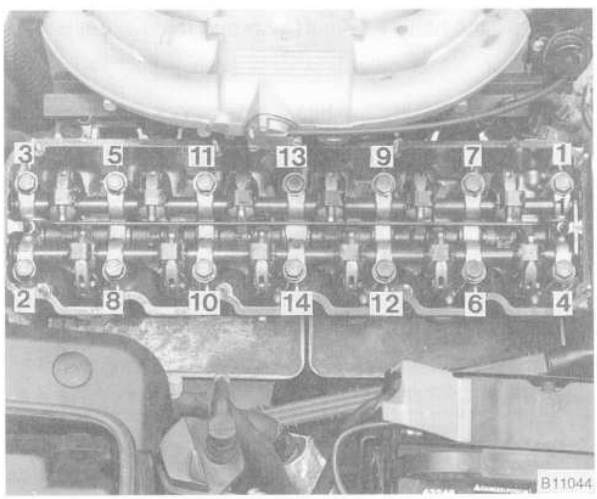

Fig. 5. Cylinder head bolt loosening sequence.

NOTE —

- *If the head is stuck, use a soft-faced mallet or pry gently with a wooden stick.*
- *A spring-loaded crankcase ventilation tube is connected between the intake manifold and the crankcase breather assembly. A special tool is available from BMW (BMW special tool no. 11 1 290) to compress the spring and hold the tube to the cylinder block while the cylinder head is removed.*

To install cylinder head (M20 engine)

Prior to installation, clean the cylinder head and the gasket surface of the cylinder block. Clean the threads of the head bolts and bolt holes with a thread chaser and remove all foreign matter and any liquid from the bolt holes. Avoid letting debris into the cylinders or oil passages in the cylinder block.

CAUTION —
Do not use a metal scraper or wire brush to clean the aluminum cylinder head or pistons.

1. Check the gasket surface of the cylinder head and the cylinder block for warpage using a straight edge.

NOTE —
If the cylinder head has been machined, a special 0.3 mm thicker gasket should be installed. The thicker gasket is available from an authorized BMW dealer.

2. Place a new cylinder head gasket on the surface of the cylinder block. The cylinder head gasket will fit correctly in only one orientation. Check that the two locating dowels are correctly positioned in the block and are not damaged.

NOTE —
The word "OBEN", printed on the gasket, should face up.

3. Place the cylinder head on the cylinder block. Guide the vent tube into its opening as the cylinder head is lowered into place. Using new cylinder head bolts, lightly lubricate the head bolts. Loosely install the head bolts and their washers, then thread them in until they are finger tight.

4. Tighten the new cylinder head bolts in the sequence shown in Fig. 6.

CAUTION —
- *Torx-head cylinder head bolts should not be reused. They are stretch-type bolts and must always be replaced whenever loosened.*
- *The head bolts should be tightened in three stages as listed below. The final stage(s) requires using a special tool (BMW Tool no. 11 2 110) or a suitable protractor to tighten the bolts to the specified torque angle.*
- *Some early 1989 M20 engines may be equipped with Hex-head bolts. BMW recommends that these bolts be replaced with a new set of Torx-head bolts.*

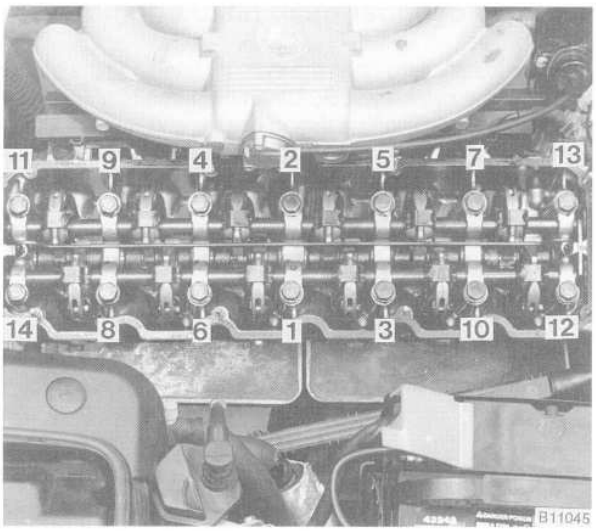

Fig. 6. Cylinder head bolt tightening sequence for M20 engine.

Tightening Torques

- Cylinder head to cylinder block (M20 engine)
  - Torx-head bolts
    - stage 1 . . . . . 30 Nm (22 ft-lb)
    - stage 2 . . . . . +90°
    - stage 3 . . . . . +90°
  - Hex-head bolts
    - stage 1 . . . . . 40+5 Nm (29+4 ft-lb)
    - wait 15 minutes
    - stage 2 . . . . . 60+5 Nm (44+4 ft-lb)
    - run engine for 25 minutes
    - stage 3 . . . . . 25+5°

5. Set the engine to TDC and install a new camshaft timing belt. See **118 Camshaft Timing Belt**.

Installation of the remaining parts is the reverse of removal. Adjust the valve clearances as described in **116 Cylinder Head and Valvetrain**. Install the exhaust front pipe to the exhaust manifold using new nuts. Coat the manifold studs with copper paste prior to installing the nuts.

Refill the cooling system and bleed any trapped air as described in **170 Radiator and Cooling System**. Change the engine oil and filter as described in **020 Maintenance Program**. Adjust the accelerator cable as described in **130 Fuel Injection—DME**. Adjust the transmission throttle cable as described in **240 Automatic Transmission**. Additional tightening torques are given below.

Tightening Torques

- Coolant drain plug to cylinder block . . 40 Nm (30 ft-lb)
- Cylinder head cover to cylinder head . . . . . 10 Nm (89 in-lb)
- Exhaust pipe to exhaust manifold (use new nuts)
  - 1st stage . . . . . 35 Nm (26 ft-lb)
  - 2nd stage. . . . . 55 Nm (41 ft-lb)
- Radiator cooling fan to coolant pump . 40 Nm (30 ft-lb)
- Radiator drain screw to radiator . . . 2.5 Nm (22 in-lb)

To remove cylinder head (M50 engine)

Special BMW service tools are required to properly remove and install the M50 cylinder head. The special tools are used to time the valvetrain to the crankshaft and to remove the Torx E12 head bolts. Read the procedure through before beginning the job.

1. On cars with the battery mounted beneath the rear seat, disconnect the negative (–) battery cable.

> ***CAUTION —***
> *• Disconnecting the battery cables may erase fault codes stored in control unit memory.*

2. On cars with the battery in the engine compartment, remove the battery from the car and remove the battery tray.

3. Remove the front exhaust pipes from the manifolds. Discard the nuts.

4. With the engine cold, drain the engine coolant and remove the coolant hoses from the thermostat housing. Drain the engine block by removing the block drain. See **170 Radiator and Cooling System.**

> ***WARNING —***
> *Allow the cooling system to cool before opening or draining the system.*

NOTE —
The block drain is on the exhaust side of the engine, near cylinder no. 5.

5. Remove the alternator cooling duct. Remove the radiator cooling fan and the fan shroud. See **170 Radiator and Cooling System.**

NOTE —
The radiator cooling fan nut (32 mm wrench) has left-hand threads.

6. Remove the two small coolant hoses from the side of the air cleaner housing.

7. Unscrew and disconnect the electrical connector from the air mass sensor. Loosen the intake air duct hose clamp and disconnect the vacuum hoses from the air duct. Loosen the air cleaner housing mounting nuts and remove the air cleaner housing from the car together with the air mass sensor and the intake air duct. See Fig. 7.

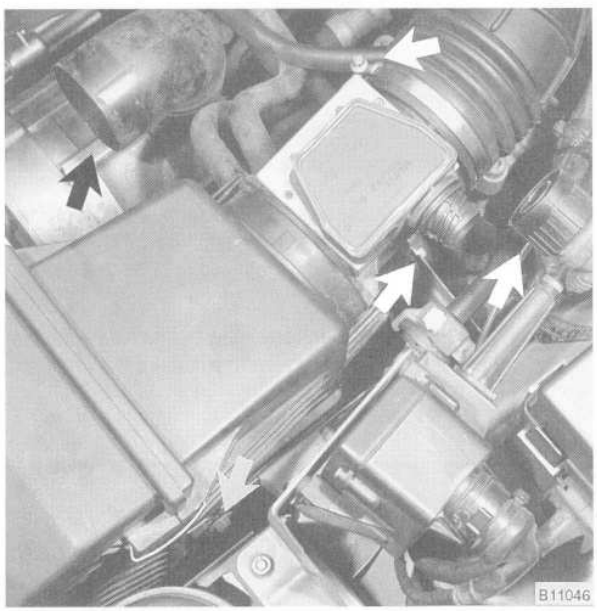

Fig. 7. Alternator cooling duct, air mass sensor connector, intake air duct hose clamp, and air cleaner housing mounting nuts (**arrows**).

8. Disconnect the throttle cable and the cruise control cable from the throttle lever. Pull the cables together with the rubber grommet from the cable bracket. See Fig. 8.

9. Disconnect the large hose from the brake system vacuum booster. Plug the opening in the vacuum booster.

10. Disconnect the crankcase ventilation hose fitting from the cylinder head cover. Remove the wiring cover from the front of the cylinder head and then remove the ground wire(s) shown in Fig. 9.

11. On 1993 and later cars, disconnect the harness connector from the VANOS solenoid at the front of the cylinder head. Remove the oil line fitting at the bottom of the VANOS control unit.

NOTE —

Wrap the VANOS oil line fitting with a shop rag to absorb leaking oil.

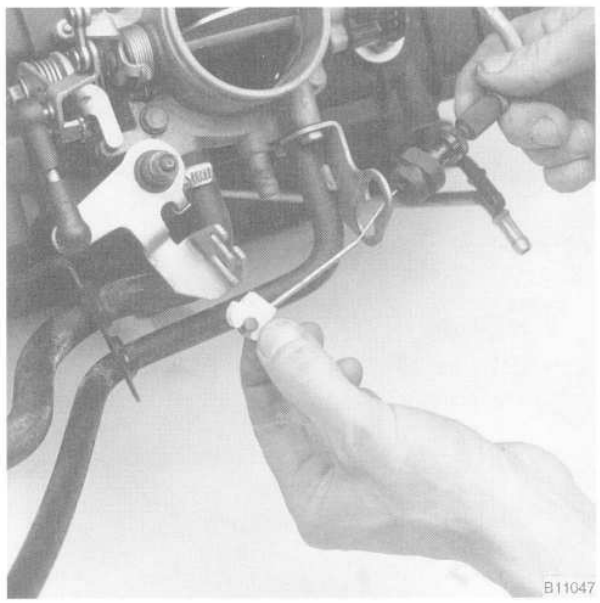

Fig. 8. Throttle cable being removed from throttle lever.

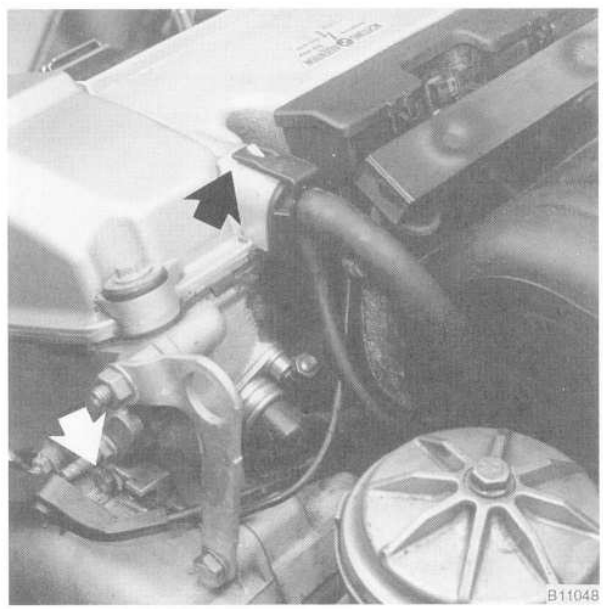

Fig. 9. Crankcase ventilation hose fitting and ground wire (**arrows**) to be disconnected and removed.

12. Remove the top plastic engine covers. See Fig. 10. Disconnect the ignition coil harness connectors from the coils. Remove the ignition coils.

13. Remove the two hold down nuts from the fuel injector harness. Pry back the injector connector retaining clips and lift the entire harness off the engine. See Fig. 11.



Fig. 10. Remove top engine cover by prying out plugs and removing nuts (**A**). Make sure rubber insulators on either side of cover do not fall off during cover removal (**arrows**).

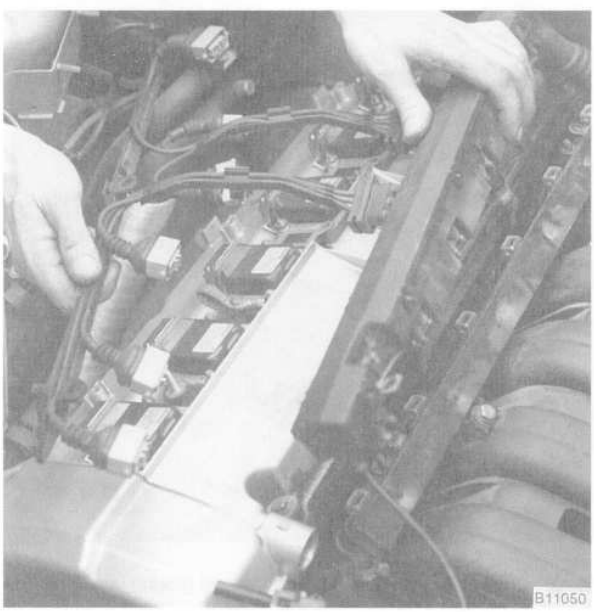

Fig. 11. Main harness being lifted off engine to be placed at base of windshield.

14. Label and disconnect the coolant hose from the throttle housing. Disconnect the connectors from the throttle switch and the intake air temperature sensor. See Fig. 12.

15. Disconnect the vent hose from the evaporate purge valve on the left fender.

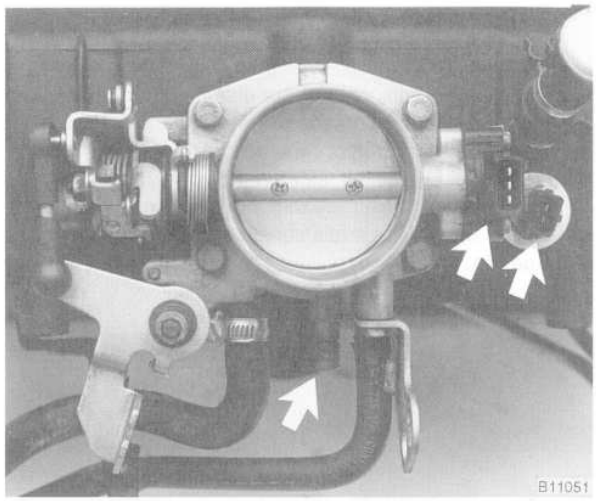

Fig. 12. Coolant hose, throttle switch connector and intake air temperature sensor connector (**arrows**) to be removed or disconnected.

16. Working from the underside of the intake manifold, disconnect the large idle air hose from the intake manifold, see Fig. 13.

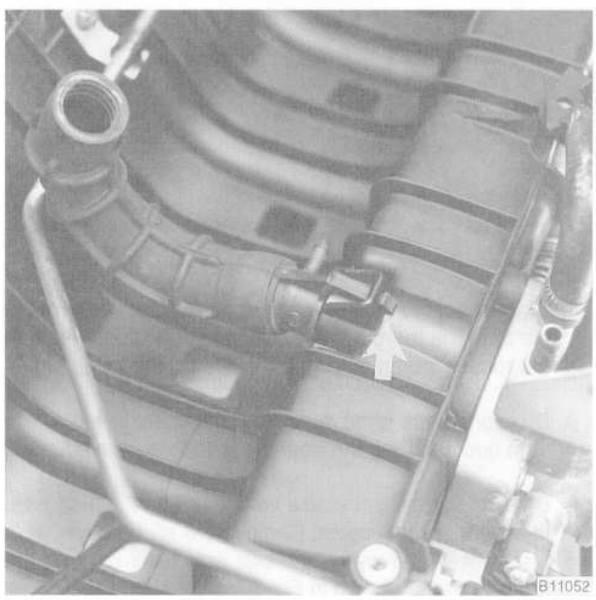

Fig. 13. Idle air hose at underside of intake manifold. Gently depress retaining clip (**arrow**) and pull out hose fitting.

CAUTION —
Use care when removing the idle air hose fitting from the manifold. The retaining clip on the fitting is fragile.

17. Working at the rear of the intake manifold, label and remove the fuel supply and fuel return lines. Remove the fuel line hold down bracket to free the lines. See Fig. 14.



Fig. 14. Fuel return (**A**) and fuel supply (**B**) lines at intake manifold.

CAUTION —
Stuff clean rags into the open intake ports to prevent any parts from falling into the engine.

18. Remove the intake manifold from the engine by removing the seven mounting nuts from above and the two support bracket bolts from below. See Fig. 15.

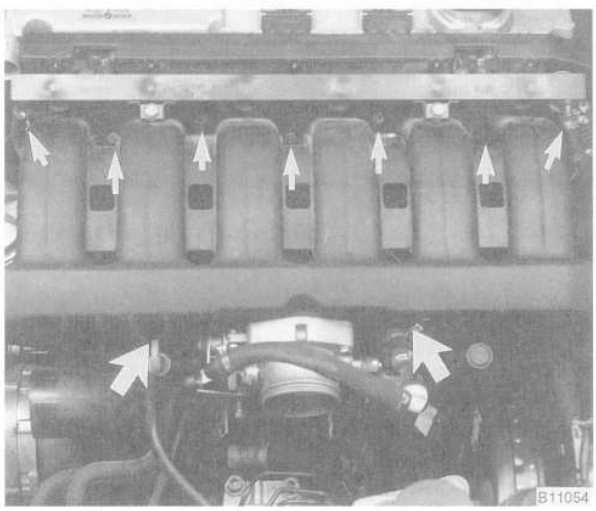

Fig. 15. Intake manifold nuts and support bracket bolts (**arrows**).

CAUTION —
Stuff clean rags into the open intake ports to prevent any parts from falling into the engine.

19. Disconnect the cylinder identification sensor, coolant temperature sensor, and the temperature gauge sender connectors shown in Fig. 16.

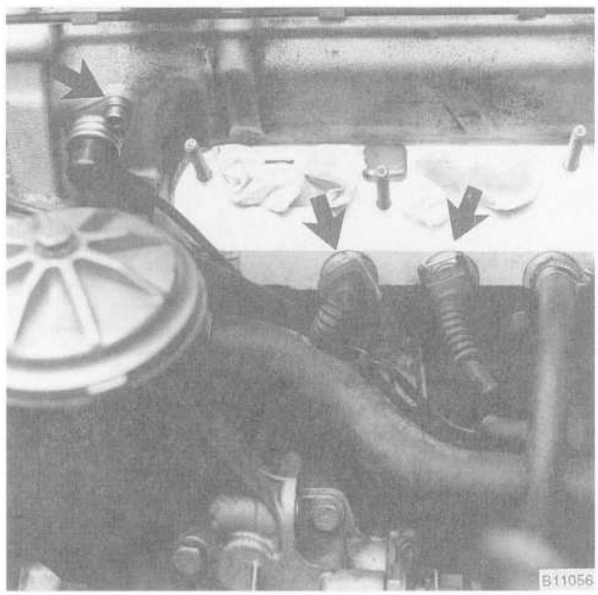

Fig. 16. Harness connectors to be disconnected (**arrows**).

20. Remove the reference/speed sensor from the front of the engine and move the sensor and its wiring out of the way. See Fig. 17.

21. Disconnect the heater hose from the rear of the cylinder head.

22. Remove the cylinder head cover mounting bolts and remove the cylinder head cover. Remove the oil baffle cover from above the intake camshaft. See Fig. 18.

NOTE —
The cylinder head cover mounting bolt insulators and gaskets must be reinstalled in the same order. Make note of their arrangement during removal.

23. Set the engine to approximate TDC by rotating the engine in the normal operating direction until the camshaft lobes at cylinder no. 1 are facing each other. The arrow(s) on the camshaft sprocket(s) should be pointing up. See Fig. 19.



Fig. 17. Reference/speed sensor mounting bolt (**arrow**).

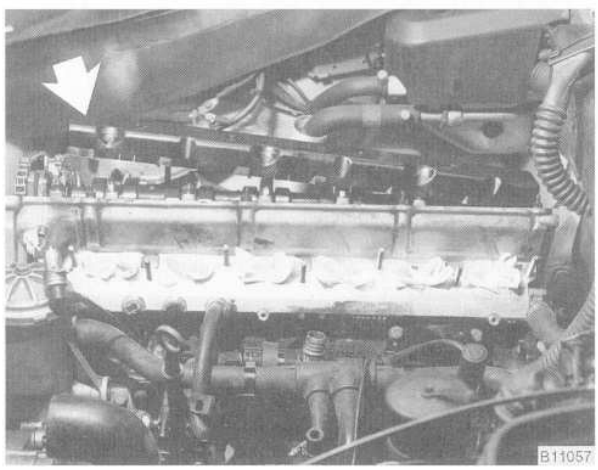

Fig. 18. Camshaft oil baffle cover (**arrow**).

NOTE —

- *M50 engines with VANOS only have one arrow on the exhaust camshaft*
- *To confirm that the crankshaft is set to the TDC position, check that the 0/T mark (0° TDC) on the front lower timing chain cover is aligned with the vibration damper. See Fig. 19.*

24. Lock the crankshaft at TDC by inserting BMW special tool no. 11 2 300 through the transmission bellhousing and into the hole in the flywheel or drive plate. See Fig. 20.

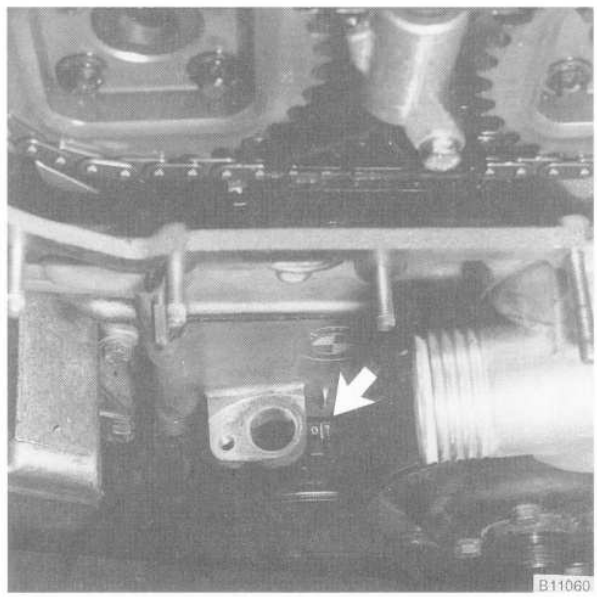

Fig. 19. Crankshaft is positioned at TDC when notch on front timing chain cover is aligned with 0/T mark on vibration damper.

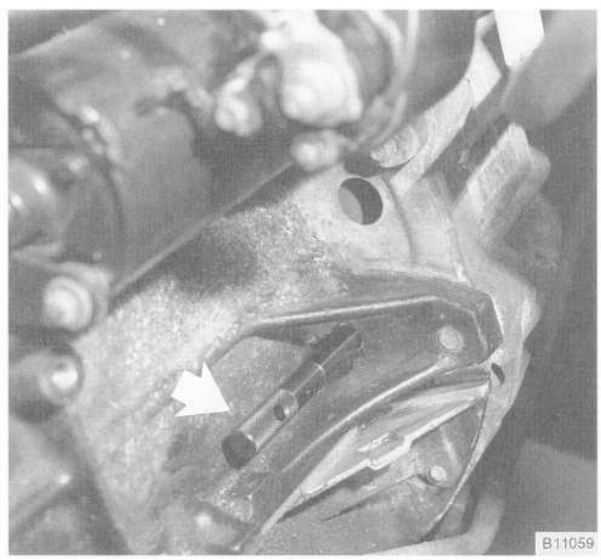

Fig. 20. BMW special tool 11 2 300 inserted through bellhousing hole and into flywheel (**arrow**).

25. Remove the three cylinder head cover mounting studs from across the rear of the head. Lock the camshafts at TDC by mounting BMW special tool no. 11 3 240 over the square ends of the camshafts. Check that the tool is squarely seated on the cylinder head gasket surface. If necessary, rotate the camshafts slightly using a 24 mm wrench at the hex on the camshaft(s).

26. On 1991 and 1992 cars, remove the timing chain cover from the front of the cylinder head. See Fig. 21.

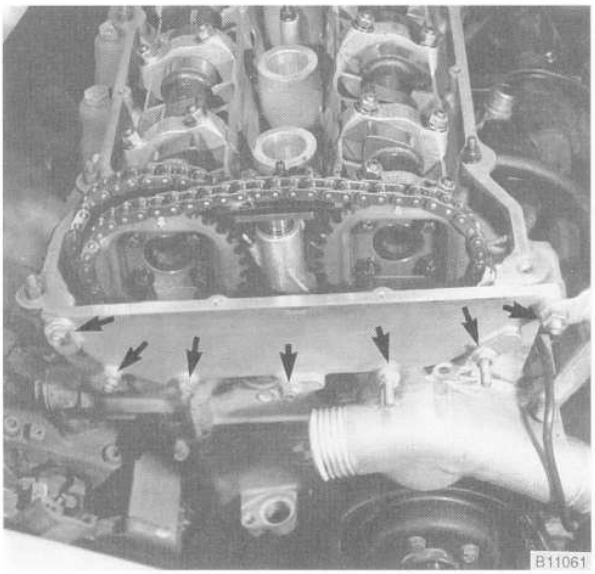

Fig. 21. Timing chain cover mounting nuts (**arrows**) on 1991 and 1992 cars.

> ***CAUTION —***
> *The camshafts must be locked in the TDC position using the special service tool or an equivalent before removing the timing chain. The arrows on the sprockets should not be used to accurately set the engine to TDC. The tool holds the camshafts parallel to each other and perpendicular to the valve cover gasket surface.*

27. On 1993 and later cars (VANOS), remove the two access plugs from VANOS control unit, just in front of the exhaust camshaft sprocket. Remove the four exhaust camshaft sprocket mounting bolts using a Torx E10 socket.

> ***NOTE —***
> *Removal of the access plugs allows the lower exhaust camshaft sprocket mounting bolts to be accessed.*

28. Depress the secondary timing chain tensioner and lock it down by inserting BMW special tool no. 11 3 290. Alternatively, a stiff piece of wire can be used. See Fig. 22.

29. On 1991 and 1992 cars, remove intake and exhaust camshaft sprocket mounting bolts using a Torx E10 socket.

30. On 1993 and later cars (VANOS), remove the six VANOS control unit mounting nuts and the bolt. Slide the control unit off the front of the cylinder head. Remove the intake camshaft sprocket mounting nuts.

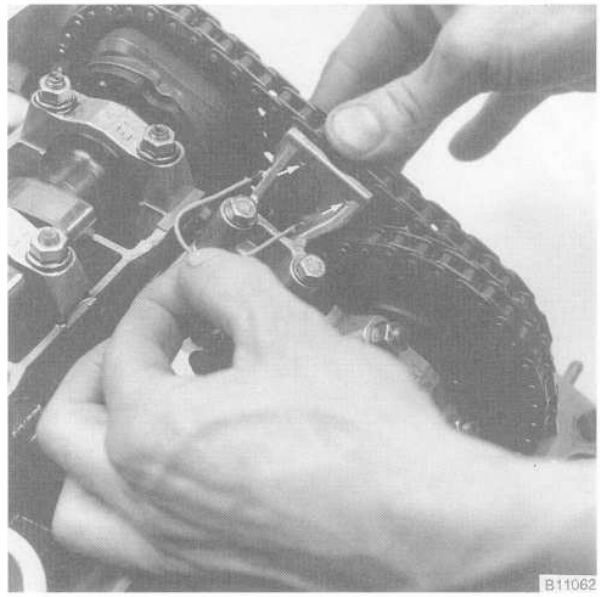

Fig. 22. Secondary timing chain tensioner being locked down. Press tensioner down fully and insert wire through holes (**arrow**).

31. Remove the secondary sprockets together with the timing chain from the front of the camshafts. On 1991 and 1992 cars, remove the cylinder identification trigger plate from the front of the intake camshaft.

> ***CAUTION —***
> *The crankshaft must not be allowed to rotate once the camshaft timing chain is removed. The pistons can contact the valves.*

> ***NOTE —***
> *Do not remove the sprockets from the chain unless these parts are being replaced. Wire tie each sprocket to the chain to keep the sprockets timed to each other.*

32. Remove the secondary timing chain tensioner.

33. Remove the primary timing chain tensioner from side of cylinder head. See Fig. 23.

> ***WARNING —***
> *Remove tensioner slowly—there is a long compressed spring beneath the tensioner end plug.*

34. Remove the timing chain guide using a Torx E8 socket. See Fig. 24.

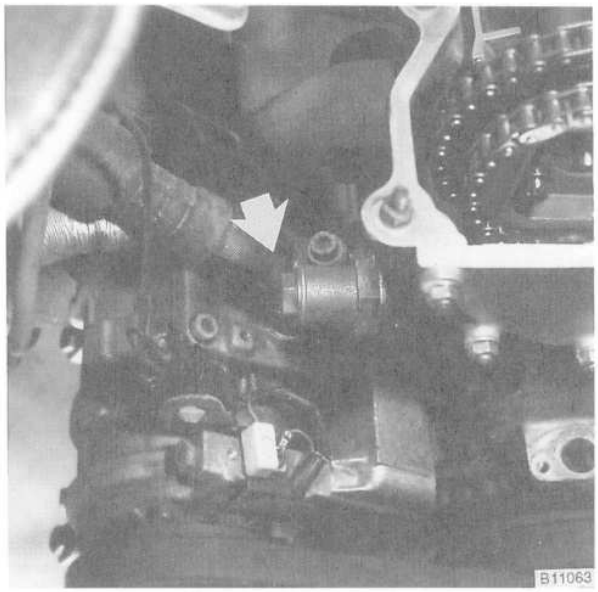

Fig. 23. Primary timing chain tensioner (**arrow**).

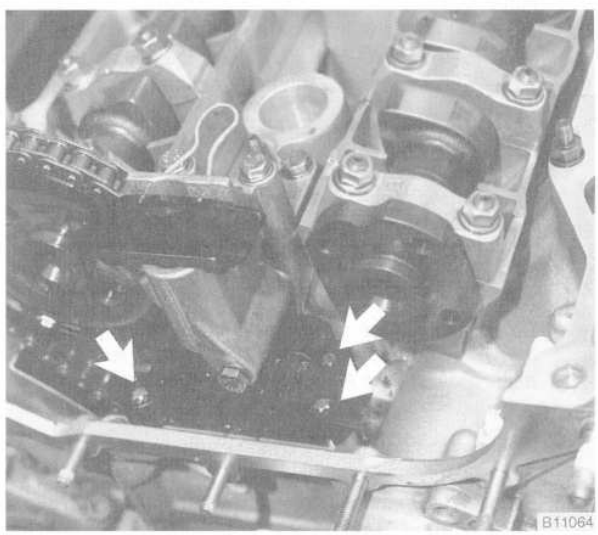

Fig. 24. Timing chain guide mounting bolts (**arrows**).

35. Lift the primary chain sprocket off the exhaust camshaft. Remove the chain from the sprocket and tie the chain up using stiff wire.

36. Using a Torx E8 socket, remove the two mounting bolts holding the cylinder head to the lower timing chain cover. See Fig. 25.

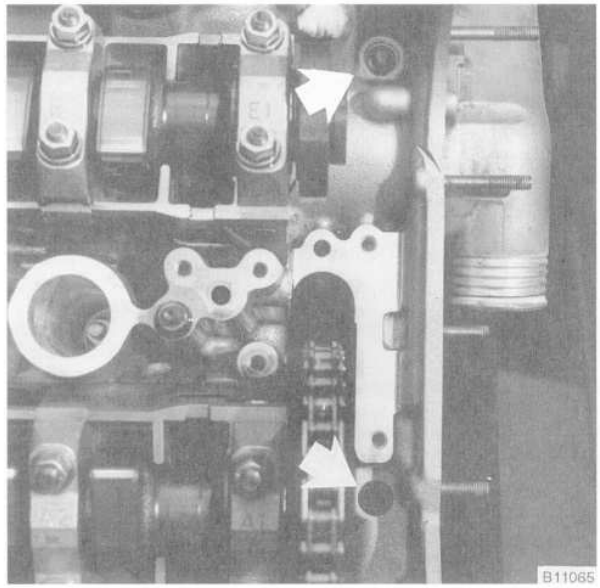

Fig. 25. Cylinder head-to-timing chain cover mounting bolts (**arrows**).

37. Using BMW special tool no. 11 2 250 or an equivalent, loosen the cylinder head bolts in several stages in the sequence shown in Fig. 26. Discard the head bolts.

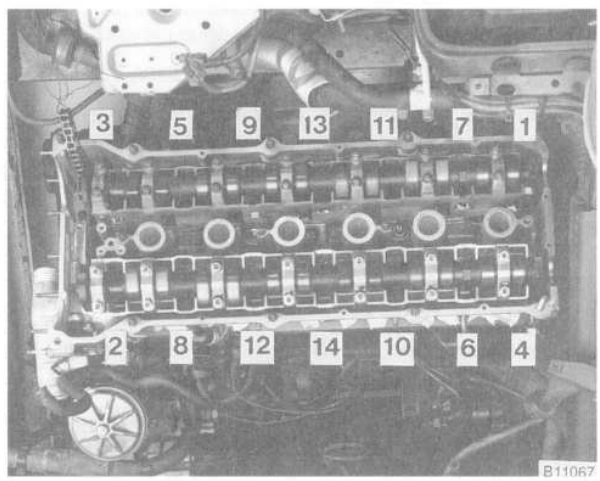

Fig. 26. Cylinder head bolt loosening sequence.

> ***CAUTION —***
> *Torx-type cylinder head bolts should not be reused. They are stretch-type bolts and must always be replaced whenever loosened.*

NOTE —

BMW special tool no. 11 2 250 is a thin-walled Torx E12 socket and extension wrench with a 1/2 inch drive. The cylinder head bolts are recessed into the head below the camshaft towers with little working space.

To install cylinder head (M50 engine)

CAUTION —
If the camshafts were removed while the cylinder head was off, a minimum waiting time, as listed be low, is required before installing the cylinder head. When the camshaft is removed, the hydraulic lifters can expand. This expansion can cause increased valve lift, resulting in open valves.

Cylinder head installation waiting times

- at or above 68°F (20°C) . . . . . 10 minutes
- 50-68°F (10-20°C) . . . . . 30 minutes
- 32-50°F (0-10°C) . . . . . 75 minutes

1. Clean the cylinder head and the gasket surface of the cylinder block. Clean the threads of the head bolts and bolt holes with a thread chaser and remove all foreign matter and any liquid from the bolt holes.

CAUTION —
Do not use a metal scraper or wire brush to clean the aluminum cylinder head or pistons. If necessary, use a hard wooden or plastic scraper.

2. Check the gasket surface of the cylinder head and the cylinder block for warpage using a straight edge.

NOTE —
If the cylinder head has been machined, a special 0.3 mm thicker gasket should be installed. The thicker gasket is available from an authorized BMW dealer.

3. Place a new cylinder head gasket on the surface of the cylinder block. The cylinder head gasket will fit correctly in only one orientation. Check that the two locating dowels are correctly positioned in the block and are not damaged.

NOTE —
The word "OBEN", printed on the gasket, should face up.

4. With the camshafts and the crankshaft locked in the TDC position with the BMW special tools as described earlier, set the cylinder head in position, guiding the primary chain through the cylinder head opening.

5. Lightly lubricate the new cylinder head bolts. Loosely install the bolts and their washers, then thread them in until they are finger tight. Install the cylinder head-to-lower timing chain cover bolts finger tight.

CAUTION —
- *The camshafts must be locked in the TDC position at the rear of the cylinder head with BMW special tool no. 11 3 240 before installing the cylinder head. If the camshafts are out of TDC position, the valves can contact the pistons.*
- *The crankshaft must be locked in the TDC position at the flywheel with BMW special tool no. 11 2 300 prior to installing the cylinder head. Check that the mark on the lower timing chain cover is aligned. See Fig. 19 given earlier.*

CAUTION —
Torx-type cylinder head bolts should not be reused. They are stretch-type bolts and must always be replaced whenever loosened.

NOTE —
Check that all washers for the cylinder head bolts are in place before installing the bolts. Some of the washers may be staked to the cylinder head.

6. Tighten the cylinder head bolts in the sequence shown in Fig. 27.

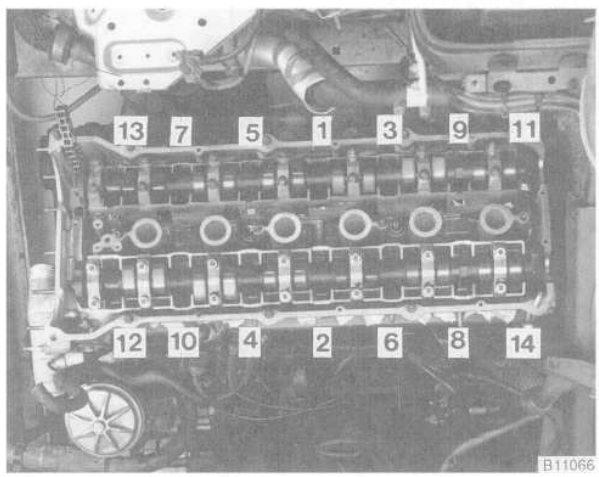

Fig. 27. Cylinder head bolt tightening sequence for M50 engine.

WARNING —
The bolts should be tightened in three stages as listed below. The final stages require the use of a special tool (BMW Tool No. 11 2 110) or a suitable protractor to tighten the bolts to a specified torque angle. See Fig. 28.

7. Tighten the cylinder head-to-lower timing chain cover bolts.

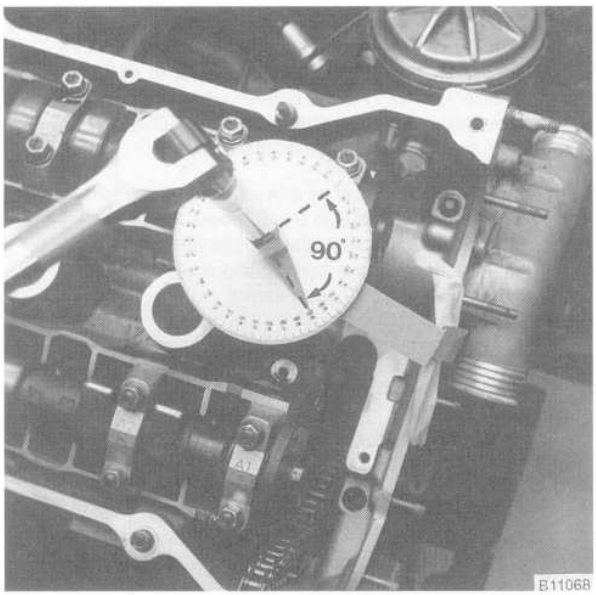

Fig. 28. Protractor and pointer being used to tighten bolts to specified torque angle.

Tightening Torques

- Cylinder head to cylinder block (M50 and M50 TU engines)
  - stage 1 ..... 30 Nm (22 ft-lb)
  - stage 2 ..... +90°
  - stage 3 ..... +90°
- Cylinder head to lower timing chain cover ..... 10 Nm (89 in-lb)

8. Mount the primary chain sprocket to the primary chain so that the arrow on the sprocket faces up. Mount the sprocket to the exhaust camshaft such that the tapped holes in the camshaft are on the left side of the elongated holes in the sprocket. See Fig. 29.

9. Install the timing chain guide and the secondary chain tensioner. Tighten the mounting bolts.

10. On 1991 and 1992 cars, install the cylinder identification trigger plate to the front of the intake camshaft.

11. Install as an assembly, the secondary chain sprockets and chain so that the arrow(s) on the sprocket(s) are pointing up. Center the mounting holes in the sprockets to the bolt holes in the camshafts. See Fig. 30. On 1993 and later cars, install thrust washers to the sprockets.

> ***CAUTION —***
> *On 1993 and later cars, mount the intake camshaft sprocket so that the collar side of the sprocket faces the camshaft.*

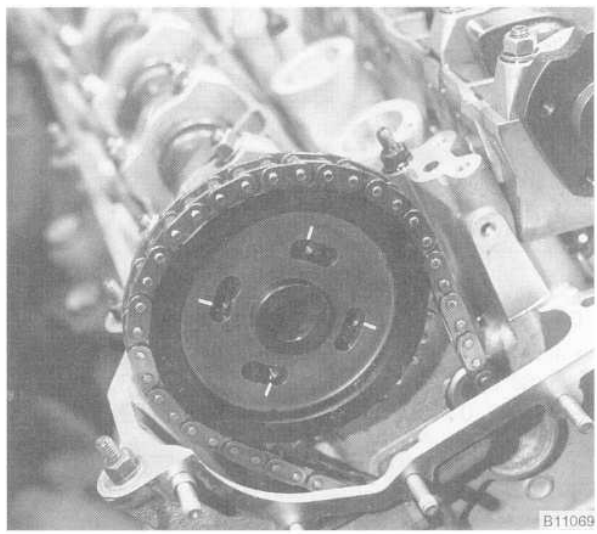

Fig. 29. Primary chain sprocket correctly aligned to exhaust camshaft. Camshaft holes should be on left most side of sprocket holes.

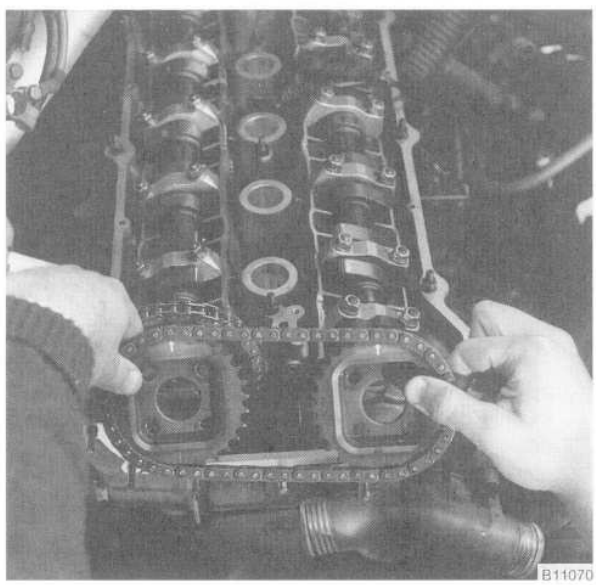

Fig. 30. Secondary chain sprockets and chain being installed on non-VANOS engine. Attach sprockets with arrows pointing up and elongated holes centered.

12. Install and tighten the sprocket mounting bolts and/or nuts finger tight only.

13. On 1993 and later cars, tighten the intake camshaft sprocket mounting nuts.

Tightening Torque

- 1993 and later M50TU engine
  Intake camshaft sprocket
  mounting nuts (M6) . . . . . 10 ± 1 Nm (89 ± 9 in-lb)

14. On 1991 and 1992 cars, install the primary chain tensioner so that the cutout in the tensioner piston engages the chain rail as shown in Fig. 31.

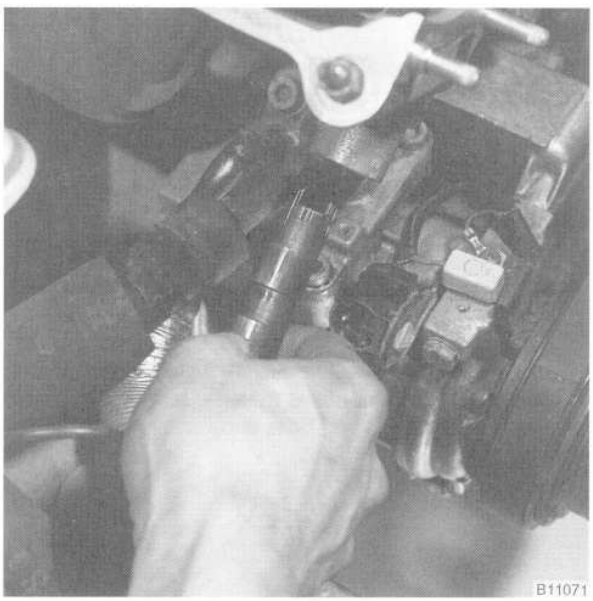

Fig. 31. Primary chain tensioner being installed on 1991 and 1992 cars. Piston cutout must be in position shown to engage chain rail.

Tightening Torque

- Primary camshaft timing chain tensioner
  to tensioner sleeve . . . . . 50 Nm (37 ft-lb)

15. On 1993 and later cars, install BMW special tool no. 11 3 390 into the primary timing chain tensioner sleeve. Thread the tool in finger tight until the slack is removed from the chain. Check that the chain is free of slack.

NOTE —

BMW special tool no. 11 3 390 is a dummy primary chain tensioner and simulates the function of the tensioner.

16. Install the VANOS control unit as described in **117 Camshaft Timing Chain**.

17. Slowly unlock and release the secondary chain tensioner.

CAUTION —

Special installation instructions apply when mounting the VANOS control unit to the cylinder head. Be sure to follow the procedure found in **117 Camshaft Timing Chain**.

18. On 1991 and 1992 cars, tighten the secondary timing chain sprocket bolts in two stages, working at the intake side first.

Tightening Torque

- 1991 and 1992 M50 engine
  Secondary timing chain sprocket to camshaft
  (Torx bolts)
  stage 1 . . . . . 5 Nm (44 in-lb)
  stage 2 . . . . . 22 Nm (17 ft-lb)

19. On 1991 and 1992 cars, install the front timing chain cover to the cylinder head using a new gasket. Apply a small amount of liquid gasket sealer (Three Bond 1209 or equivalent) to the cover alignment dowels.

20. On 1993 and later cars, preload the primary chain by tightening BMW special tool no. 11 3 390 (dummy chain tensioner) to 1.3 Nm (11 in-lb). Then tighten the exhaust secondary camshaft sprocket mounting bolts in two stages.

Tightening Torque

- 1993 and later M50TU engine
  Exhaust secondary timing chain sprocket to camshaft
  (Torx bolts)
  stage 1 . . . . . 5 Nm (44 in-lb)
  stage 2 . . . . . 22 Nm (17 ft-lb)

21. Remove the flywheel locking tool from the transmission bellhousing. Remove the camshaft locking tool from the rear of the cylinder head.

22. Turn the engine over by hand at least two full crankshaft rotations. Reinstall the camshaft locking tool and the flywheel locking tool to make sure all adjustments are still correct. If settings are correct, remove the locking tools.

23. On 1993 and later cars, remove BMW special tool 11 3 390 (dummy chain tensioner) from the side of the cylinder head. Install the primary chain tensioner so that the cutout in the tensioner piston engages the chain rail as shown earlier in Fig. 31. Using new seals, install and tighten the access plugs in the VANOS control unit.

Tightening Torques—1993 and later M50TU engine

- Primary camshaft timing chain tensioner to tensioner sleeve . . . . . 50 Nm (37 ft-lb)
- Access plugs to VANOS control unit . . . . . 50 ± 5 Nm (30 ± 3 ft-lb)

24. Install the cylinder head cover.

Tightening Torque

- Cylinder head cover to cylinder head . . . . . 10 Nm (89 in-lb)

25. Install the front exhaust pipes to the manifolds using new nuts. Coat the manifold studs with copper paste prior to installing the nuts.

Tightening Torque

- Exhaust pipe to exhaust manifold (use new nuts)
  1st stage . . . . . 35 Nm (26 ft-lb)
  2nd stage . . . . . 55 Nm (41 ft-lb)

26. Installation of the remaining parts is the reverse of removal. Refill the cooling system as described in **170 Radiator and Cooling System**. Change the engine oil and filter as described in **020 Maintenance Program**. Adjust the accelerator cable as described in **130 Fuel Injection—DME**. Additional tightening torques are given below.

CAUTION—
To prevent damaging engine electronic systems, be sure to install the ground wires at the cylinder head cover mounting studs and at the front of the cylinder head.

Tightening Torques

- Coolant drain plug to cylinder block . . . . . 40 Nm (30 ft-lb)
- Intake manifold to cylinder head . . . . . 15 ± 2 Nm (11 ± 1ft-lb)
- Radiator cooling fan to coolant pump . . . . . 40 Nm (30 ft-lb)
- Radiator drain screw to radiator . . . 2.5 Nm (22 in-lb)

To remove cylinder head (M30 engine)

1. Working beneath rear seat cushion, disconnect the negative (–) terminal of the battery.

CAUTION—
Disconnecting the battery cables may erase fault codes stored in control unit memory.

2. With the engine cold, drain the engine coolant from the radiator and from the cylinder block. See **170 Radiator and Cooling System**.

WARNING—
Allow the cooling system to cool before opening or draining the system. Hot coolant can scald and burn.

3. Remove the radiator cooling fan and the radiator fan shroud. See **170 Radiator and Cooling System**.

NOTE—
The radiator cooling fan nut (32 mm wrench) has left-hand threads.

4. Disconnect the coolant hoses from thermostat housing.

5. Working at the coolant reservoir, disconnect the harness connector from the coolant level sensor. Disconnect all the coolant hoses from the reservoir. Remove the reservoir mounting bolts and remove the reservoir from the car. See Fig. 32.



Fig. 32. Coolant reservoir hoses and connectors to be disconnected (**arrows**). Remove mounting bolts at **A** to remove reservoir.

6. Disconnect the coolant hoses from the heater core and the heater valve shown in Fig. 33.

7. Remove the front exhaust pipes from the manifolds.

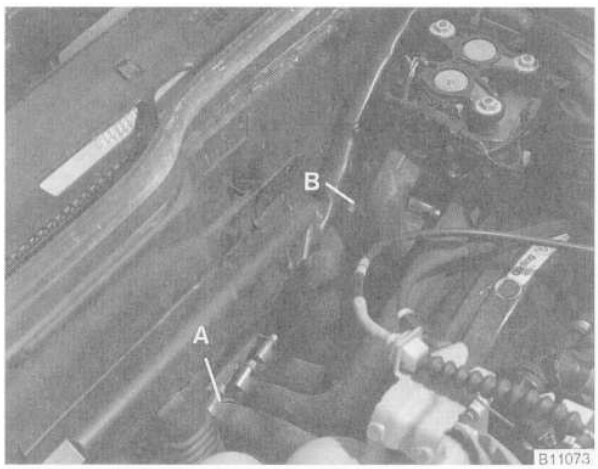

Fig. 33. Coolant hose at heater core (**A**) and heater valve (**B**) to be disconnected.

8. Loosen the air cleaner housing mounting nuts. Loosen the intake air boot hose clamps. Disconnect the intake air hose and lift the air cleaner housing out of the car.

9. Disconnect any hoses from the intake air boot between the air flow sensor and the intake manifold. Remove the idle air control valve bracket mounting nut and remove the valve from the intake boot. Loosen the air boot hose clamps and remove the boot. See Fig. 34.



Fig. 34. Disconnect hose clamps and remove idle air control valve mounting bracket (**arrows**) to remove intake air boot.

NOTE —

Some hoses may be secured with one-time crimp-type hose clamps. The clamps may be pried loose with a small screwdriver. Replace the clamps with standard screw-type clamps.

10. Remove the air flow sensor by disconnecting the harness connector and removing the retaining clips from the underside of the air flow sensor. See Fig. 35.

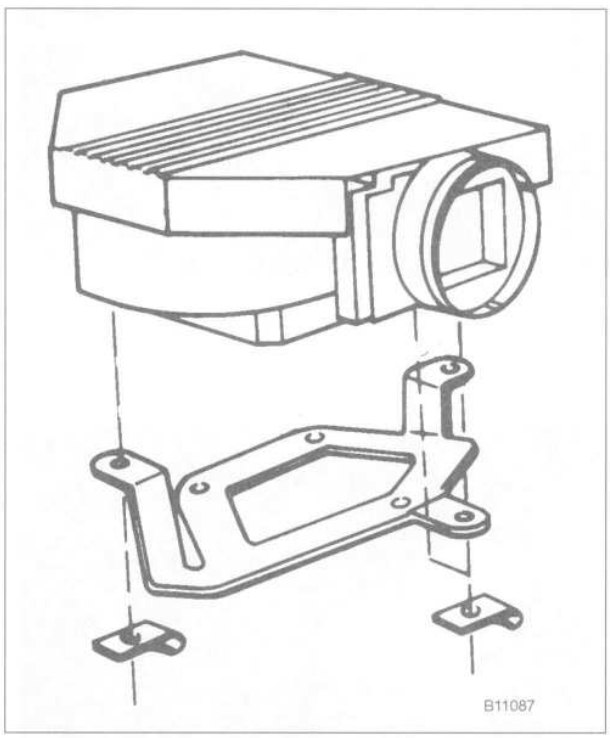

Fig. 35. Air flow sensor mounting clips (**arrows**).

11. Disconnect the cables from the throttle lever. Remove the cable bracket from the intake manifold and move the cables out of the way. See Fig. 36.

12. Disconnect the harness connectors shown in Fig. 37.

13. Label and then disconnect the wiring from the starter motor.

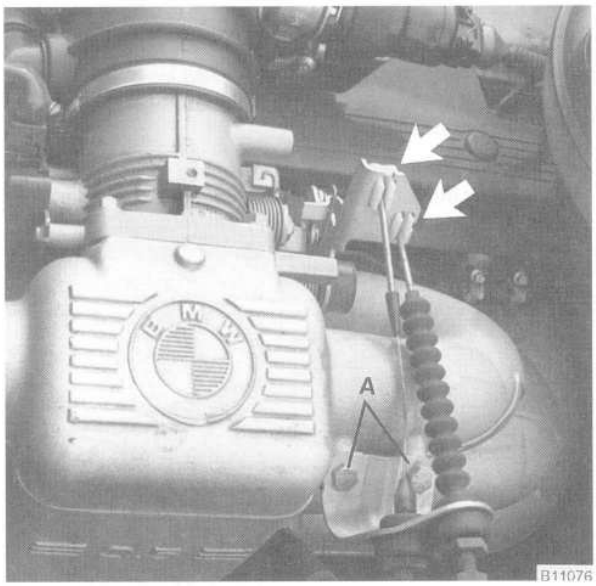

Fig. 36. Disconnect cables at throttle lever (**arrows**) and remove cable bracket bolts (**A**).

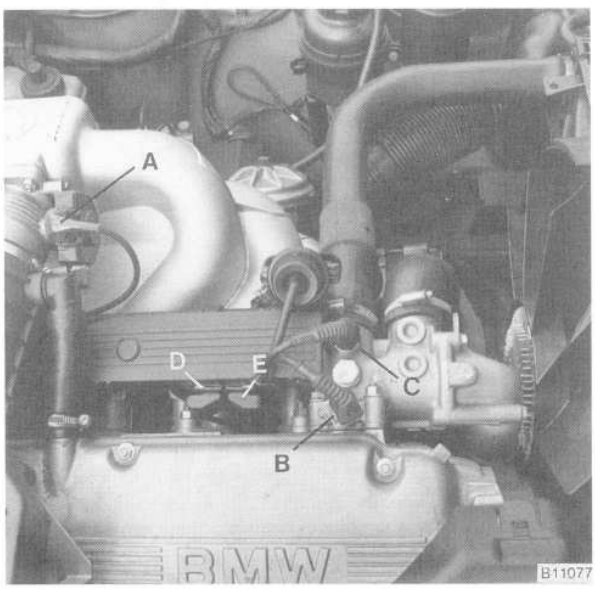

A. Throttle switch
B. Coolant temperature sensor
C. Temperature gauge sender
D. Crankshaft position sensor
E. Cylinder identification sensor

14. Working beneath the intake manifold, label and then disconnect the fuel supply and fuel return lines. Disconnect the harness connector from the charcoal (EVAP) canister purge valve. See Fig. 38.

15. Disconnect the large vacuum hose from the brake vacuum booster. Plug the opening in the vacuum booster.

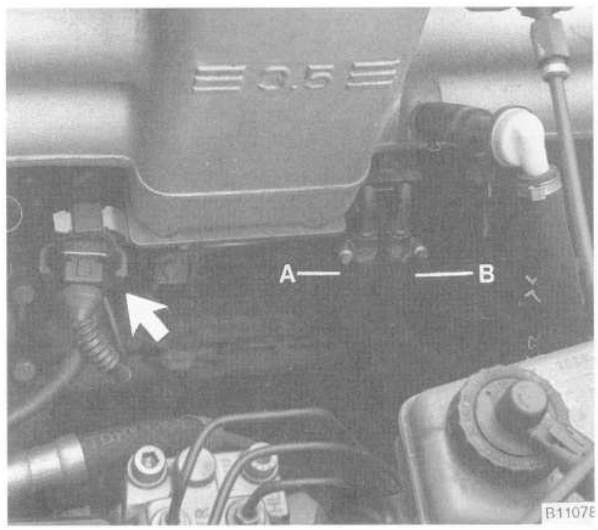

Fig. 38. Fuel return (**A**) and supply (**B**) lines beneath intake manifold. Also disconnect connector from EVAP canister purge valve.

16. Disconnect the harness connector from the oil pressure switch at the left rear corner of the cylinder head. Remove the main harness from its mounting studs, disconnecting any remaining connectors. Set the harness out of the way.

17. Remove the distributor cap, spark plug wires, and the distributor rotor. Remove the rotor adaptor and the black dust shield from the front of the camshaft. See **120 Ignition System—DME**.

18. Working beneath the intake manifold, remove the intake manifold support bracket. Remove the cylinder head cover mounting nuts. Disconnect the PCV hose from the cover and remove the cover.

19. Remove the upper camshaft timing chain cover. See Fig. 39.

20. Using a socket on the vibration damper mounting bolt, turn the engine over in direction of normal rotation until the camshaft sprocket mounting bolts are straight up and down and the locating dowel is in the lower left-hand corner. See Fig. 40.

NOTE —
Check also that the 0/T mark (0° TDC) is aligned with the mark on the lower timing chain cover.

21. Remove the timing chain tensioner from the side of the lower timing chain cover.

CAUTION —
Remove the tensioner slowly. There is a long compressed spring beneath the tensioner plug.

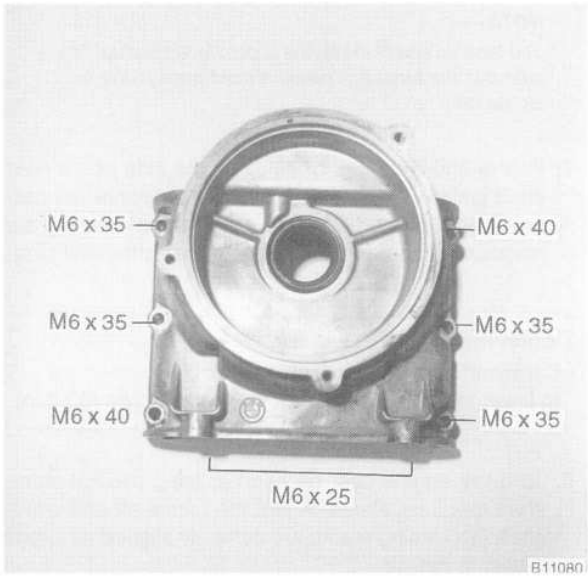

Fig. 39. Upper timing chain cover. Note different length bolts.

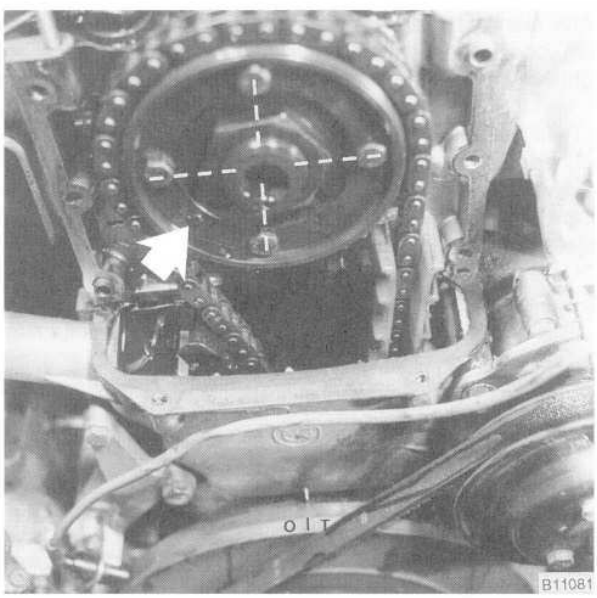

Fig. 40. Engine set to TDC. Sprocket bolts are straight up and down and locating dowel (**arrow**) is in lower left corner. 0/T mark on vibration damper should also be aligned with mark on timing chain cover.

22. Remove the camshaft sprocket mounting bolts and remove the sprocket. Tie the chain up using stiff wire.

> ***CAUTION —***
> *The crankshaft should not be allowed to rotate once the camshaft timing chain is removed.*

23. Check carefully for any remaining connectors, wiring, hoses, brackets, wire ties, clamps or components that will interfere with the removal of the cylinder head.

24. Gradually and evenly loosen and remove the cylinder head bolts using the sequence shown in Fig. 41. Remove the cylinder head.

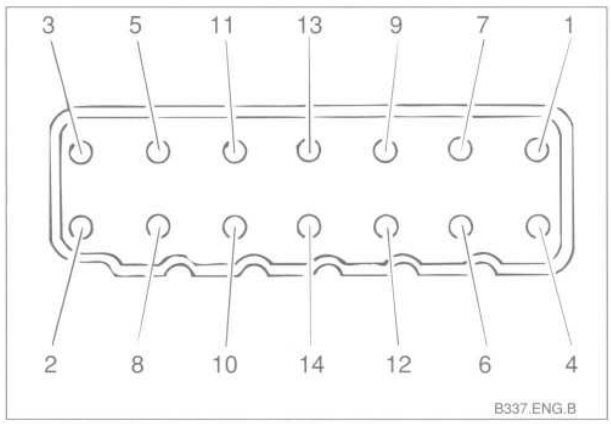

Fig. 41. Cylinder head bolt loosening sequence.

> ***NOTE —***
> *If the head is stuck, use a soft-faced mallet or pry gently with a wooden stick.*

To install cylinder head (M30 engine)

Prior to installation, clean the cylinder head and the gasket surface of the cylinder block. Clean the threads of the head bolts and bolt holes with a thread chaser and remove all foreign matter and any liquid from the bolt holes. Avoid letting debris into the cylinders or oil passages in the cylinder block.

> ***CAUTION —***
> *Do not use a metal scraper or wire brush to clean the aluminum cylinder head or pistons. If necessary, use a hard wooden or plastic scraper.*

1. Check the gasket surface of the cylinder head and the cylinder block for warpage using a straight edge.

> ***NOTE —***
> *If the cylinder head has been machined, a special 0.3 mm thicker gasket should be installed. The thicker gasket is available from an authorized BMW dealer.*

2. Place a new cylinder head gasket on the surface of the cylinder block. The cylinder head gasket will fit correctly in only one orientation. Check that the two locating dowels are correctly positioned in the block and are not damaged.

NOTE —

The word "OBEN", printed on the gasket, should face up.

3. Make sure the crankshaft and the camshaft are set to the TDC position as shown earlier in Fig. 40. Then place the cylinder head on the cylinder block. Using new cylinder head bolts, lightly lubricate the head bolts. Loosely install the head bolts and their washers.

4. Tighten the new cylinder head bolts in the sequence shown in Fig. 42.

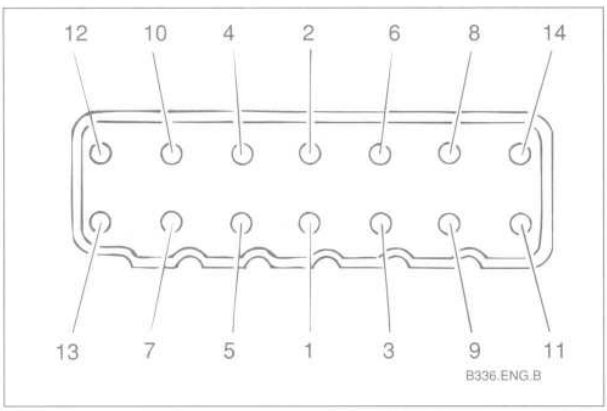

Fig. 42. Cylinder head bolt tightening sequence for M30 engine.

CAUTION —

- *Always use new head bolts.*
- *Head bolts should be tightened in three stages. The final stage requires using a special tool (BMW Tool no. 11 2 110) or a suitable protractor to tighten the bolts to a specified torque angle.*
- *The engine must be fully assembled and run for twenty-five minutes before tightening the head bolts to their final torque.*

Tightening Torques

- Cylinder head to cylinder block (M30 engine)
  stage 1 . . . . . 60 ± 2 Nm (43 ± 1 ft-lb)
  wait 20 minutes
  stage 2 . . . . . 80 ± 2 Nm (58 ± 1 ft-lb)
  run engine for 25 minutes
  stage 3 . . . . . 35+5°

5. Mount the camshaft sprocket and timing chain so that all chain slack is on the tensioner side of the chain. Tighten the sprocket mounting bolts.

6. Install the camshaft chain tensioner piston, the spring, a new seal, and the chain tensioner end plug. Leave the end plug a little loose.

NOTE —

The tapered end of the spring should face the plug. The cutout in the tensioner piston should engage the tensioner rail.

7. Pour a small amount of oil down the side of the camshaft timing chain cover. Move the tensioner rail back and forth slowly until oil runs out past the end plug and resistance can be felt at the rail, then tighten the plug.

Tightening Torque

- Camshaft timing chain tensioner
  to lower timing chain cover . . . . . 40 Nm (30 ft-lb)

8. Turn the engine over by hand at least two full crankshaft rotations. Recheck that the camshaft and crankshaft TDC timing marks are correctly aligned as shown earlier in Fig. 40.

Installation of the remaining parts is the reverse of removal. Adjust the valve clearances as described in **116 Cylinder Head and Valvetrain**. Install the exhaust front pipe to the exhaust manifold using new nuts. Coat the exhaust pipe flanges with copper paste prior to installing the pipes to the manifold, tightening the pipe with the corrugated section last.

Refill the cooling system and bleed any trapped air as described in **170 Radiator and Cooling System**. Change the engine oil and filter as described in **020 Maintenance Program**. Adjust the accelerator cable as described in **130 Fuel Injection—DME**.

Additional tightening torques are given below. When reinstalling the upper timing chain cover, use new gaskets and seal the lower corners of the cover (where the cover meets the head gasket) using Three Bond 1207 or an equivalent silicon sealer.

Tightening Torques-M30 Engine

- Camshaft sprocket to
  camshaft flange . . . . . 10 Nm (89 in-lb)
- Coolant drain plug
  to cylinder block . . . . . 40 Nm (30 ft-lb)
- Cylinder head cover
  to cylinder head . . . . . 10 Nm (89 in-lb)
- Exhaust pipe to exhaust manifold
  (coat flanges with copper paste)
  1st stage . . . . tighten nuts evenly to 10 Nm (89 in-lb)
  2nd stage. . . . . loosen nuts 1-1/2 turn
- Ignition rotor adaptor to camshaft (install with
  thread locking compound) . . . 23 ± 1 Nm (17 ± 1 ft-lb)
- Radiator cooling fan
  to coolant pump . . . . . 40 Nm (30 ft-lb)
- Radiator drain screw to radiator . . . . 2.5 Nm (22 in-lb)
- Upper timing chain cover
  to cylinder head . . . . . 10 Nm (89 in-lb)

To remove cylinder head (M60 engine, left cylinder head)

This procedure covers removal of the left (driver's side) cylinder head only.

NOTE —

Special service tools are required to adjust camshaft timing as part of cylinder head installation. Be sure to review the adjustment procedure outlined in **117 Camshaft Timing Chain** *before removing the cylinder head.*

1. Working beneath rear seat, disconnect negative (–) terminal of battery.

CAUTION —

Disconnecting the battery cables may erase fault codes stored in control unit memory.

2. With engine cold, drain engine coolant from radiator and left cylinder block. Remove radiator fan and fan shroud. See **170 Radiator and Cooling System**.

WARNING —

Allow the cooling system to cool before opening or draining the system. Hot coolant can scald and burn.

NOTE —

- *The radiator cooling fan nut (32 mm wrench) has left-hand threads.*
- *There are two block drains, one on either side of the engine. It is not necessary to remove both plugs if only one head is being removed.*

3. Remove left exhaust manifold. See **180 Exhaust System**. Discard mounting nuts.

4. Remove ignition coils and spark plugs. See **120 Ignition System—DME**.

5. Remove intake manifold.
   - Remove cover from rear of intake manifold. See Fig. 43.
   - Remove intake manifold nuts from left and right cylinder heads, noting arrangement of rubber grommets beneath nuts.
   - Lift intake manifold together with throttle housing from cylinder heads.

6. Remove left and right cylinder head covers. See **116 Cylinder Head and Valvetrain**.

7. Remove oil supply lines above camshafts on left cylinder head.

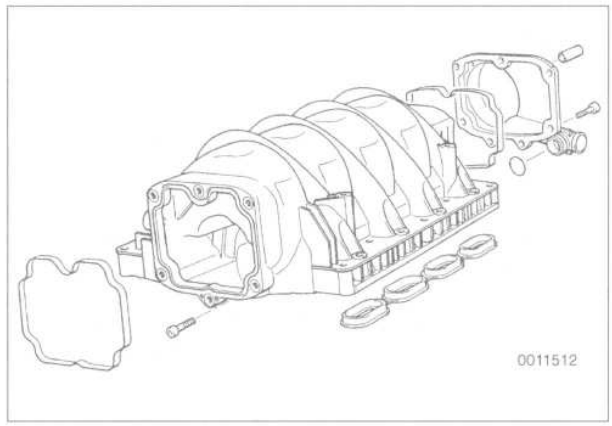

Fig. 43. Crankcase ventilation pressure regulating valve cover at rear of intake manifold (**arrow**).

8. Remove coolant crosspipe (accumulator) from rear of engine.
   - unbolt coolant expansion tank and set aside
   - remove diagnostic connector retaining clip and free connector from bracket
   - separate main harness plug and set wiring harness aside, see Fig. 44
   - disconnect and label harness connectors at crosspipe
   - disconnect ground wire at rear engine lifting bracket
   - disconnect all coolant hoses from crosspipe
   - remove crosspipe mounting bolts and carefully remove pipe

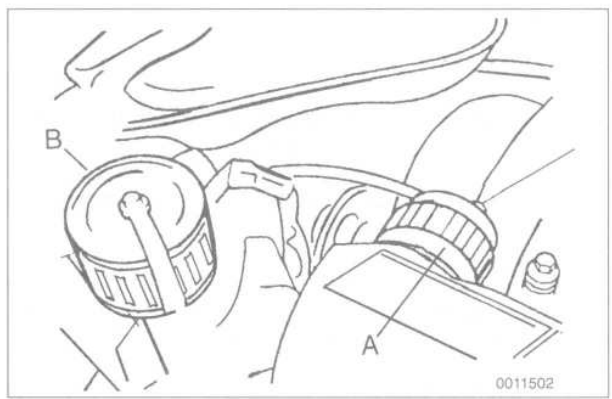

Fig. 44. Main wiring harness connector (**A**) and diagnostic connector (**B**).

9. Remove upper timing chain cover from front of left cylinder head.
   - unfasten battery cable and tank venting valve from timing cover
   - remove secondary air injection ducting, if applicable
   - remove timing chain cover mounting bolts (qty. 9) and carefully separate cover from cylinder head
10. Remove timing chain tensioner from side of right cylinder head.
11. Turn engine over in direction of normal rotation until cylinder no. 1 is at TDC overlap position (i.e. intake and exhaust valves open, 360° away from TDC ignition).

NOTE —

TDC position is marked on the crankshaft vibration damper as "0/T".

12. Loosen three top bolts on right camshaft sprockets of left and right cylinder heads.

CAUTION —

- *Hold camshaft stationary (at hex on camshaft) when loosening or tightening camshaft sprocket mounting bolts.*
- *Do not damage cylinder head casting when using open end wrench at camshaft hex. If necessary, grind or machine wrench to fit into opening in cylinder head.*

NOTE —

Assume left and right orientation as sitting in driver's seat.

13. Turn engine over in direction of normal rotation until cylinder no. 1 is at TDC ignition.
14. Loosen remaining three bolts of right camshaft sprockets on both cylinder heads.
15. While holding camshaft stationary, loosen and remove intake camshaft sprocket bolts on left cylinder head. Remove sprocket and secure chain with wire.
16. Slowly turn engine over (away from direction of normal rotation) until cylinder no. 1 is at 45° before TDC (BTDC). See Fig. 45.
17. Remove bolts from timing chain guide rails and pull crankcase ventilation oil separator away from cylinder head. See Fig. 46.
18. Using BMW special tool no. 11 2 250 or an equivalent, loosen cylinder head bolts in stages, working diagonally from outermost bolts toward center of head. Remove cylinder head.

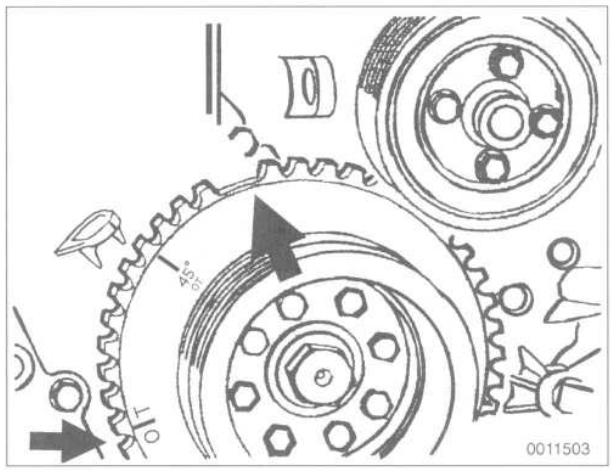

Fig. 45. Crankshaft vibration dampener positioned at 45° BTDC. Note position of 0/T mark and gap in toothed wheel (**arrows**).

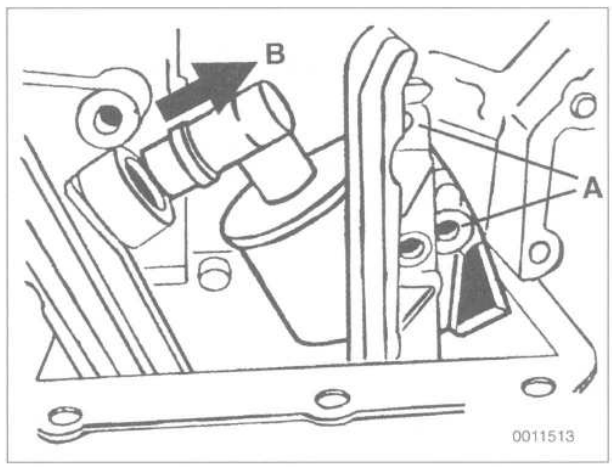

Fig. 46. Remove bolts from chain guide rail (**A**) and disconnect oil separator from cylinder head (**B**).

CAUTION —

Torx-type cylinder head bolts should not be reused. They are stretch-type bolts and must always be replaced whenever loosened.

NOTE —

- *BMW special tool no. 11 2 250 is a thin-walled Torx E12 socket and extension wrench with a 1/2 inch drive. The cylinder head bolts are recessed into the head below the camshaft towers with little working space.*
- *Be sure to lift crankcase ventilation oil separator away from head as head is lifted off.*

To install cylinder head (M60 engine, left cylinder head)

Prior to installation, clean cylinder head and gasket surfaces. Remove all foreign matter and liquid from head bolt holes in cylinder block.

CAUTION —
A minimum waiting time must be observed before installing the cylinder head if the camshafts were previously removed. When the camshafts are removed, the hydraulic cam followers tend to expand. This expansion causes increased valve lift, possibly resulting in valve-to-piston contact during cylinder head installation.

Cylinder head installation waiting times (after cylinder head reassembly)

- at or above 68°F (20°C) . . . . . 10 minutes
- 50-68°F (10-20°C) . . . . . 30 minutes
- 32-50°F (0-10°C) . . . . . 75 minutes

NOTE —
- *Special service tools are required to adjust camshaft timing as part of cylinder head installation. Be sure to review the adjustment procedure outlined in* **117 Camshaft Timing Chain** *before beginning the job.*
- *If the cylinder head has been machined, a special 0.3 mm thicker gasket should be installed. The thicker gasket is available from an authorized BMW dealer.*

1. Apply thin bead of sealer (Hylomar SQ 32 M) to corner-joint where lower timing chain cover mates cylinder block.
2. Place a new cylinder head gasket into position. Make sure dowel sleeves are correctly positioned in block and not damaged.
3. With crankshaft at 45° BTDC, set cylinder head in position.

NOTE —
Be sure to lift crankcase ventilation oil separator away from head as the head is lowered into position.

4. Lightly lubricate new cylinder head bolts. Loosely install bolts with washers. Thread all bolts in finger tight.

CAUTION —
- *Torx-type cylinder head bolts should not be reused. They are stretch-type bolts and must always be replaced whenever loosened.*
- *Do not wash protective coating from new bolts.*
- *Check that all washers for the head bolts are in place before installing bolts. Some washers may be staked to the cylinder head.*

5. Tighten cylinder head bolts in stages, alternately and diagonally in the sequence shown. See Fig. 47.

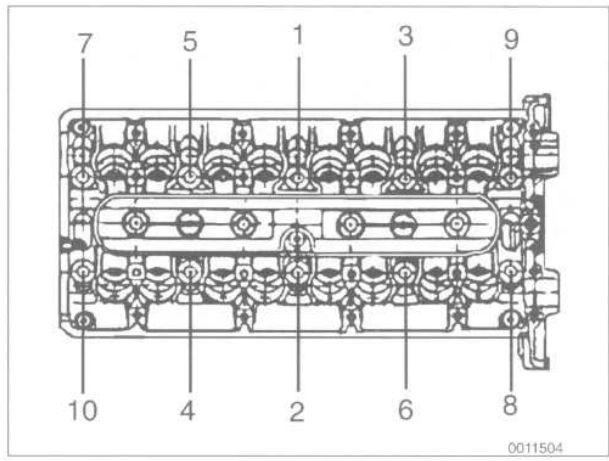

Fig. 47. Cylinder head bolt tightening sequence for M60 engine.

WARNING —
The use of a special tool (BMW Tool No. 11 2 110) or a suitable protractor is required to tighten head bolts to a specified torque angle. See Fig. 28, given earlier.

Tightening Torques

- Cylinder head to cylinder block (M60 engines)
  - stage 1 . . . . . 30 Nm (22 ft-lb)
  - stage 2 . . . . . +80°
  - stage 3 . . . . . +80°

6. Fit crankcase breather oil separator to guide rail and fit guide rail assembly to cylinder head.

NOTE —
Be sure to use the original shoulder (grub) screw when mounting the guide rail to the cylinder head. Tighten the screw to 2-3 Nm (1.5-2.2 in-lb).

7. Position camshafts and crankshaft at TDC and lock all shafts in position using BMW special tools. See **117 Camshaft Timing Chain**.
8. Install intake sprocket (left cylinder head) to timing chain and camshaft with arrow on sprocket pointing up. See Fig. 48.
   - Bolt holes in sprocket should be centered to threaded bores in camshaft. Tighten sprocket bolts finger tight.

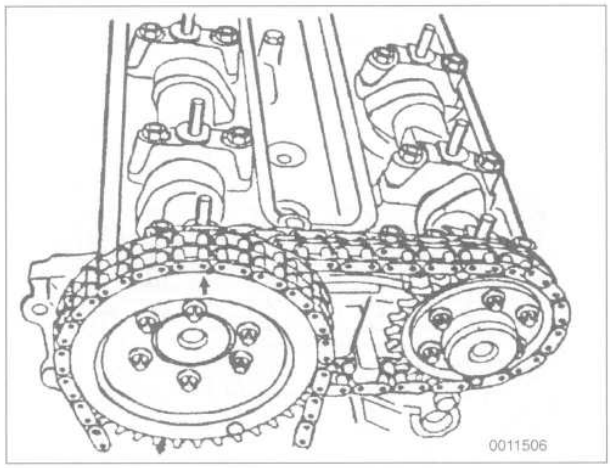

Fig. 48. Intake sprocket correctly aligned to camshaft with arrow pointing up.

9. Adjust camshaft timing, tighten sprocket mounting bolts, and install timing chain tensioner, as described in **117 Camshaft Timing Chain**.

10. The remainder of installation is the reverse of removal, noting the following special instructions:
    - When installing front timing chain cover, use new gaskets. Remove protective film from gaskets. Seal lower corners of chain cover to cylinder head before installing cover. Tighten bolts in two stages, tightening cover-to-cylinder block bolts first.
    - Use new gaskets when mounting the intake manifold. Tighten nuts finger tight first, then torque to specification in stages working diagonally from inside to outside.
    - Refill and bleed cooling system as described in **170 Radiator and Cooling System**.
    - Change engine oil and filter as described in **020 Maintenance Program**.

> ***CAUTION —***
> *To prevent damaging engine electronic systems, be sure to install all ground wires removed earlier.*

Tightening Torque—M60 engine

- Coolant drain plug to cylinder block . . 28 Nm (20 ft-lb)
- Camshaft timing chain sprocket to camshaft . . . . . 15 Nm (11 ft-lb)
- Camshaft timing chain tensioner to cylinder head . . . . . 40 Nm (30 ft-lb)
- Camshaft timing chain cover to cylinder head/cylinder block . . . . . 10 Nm (89 in-lb)
- Cylinder head cover to cylinder head/timing chain cover
  - M6 . . . . . 10 Nm (89 in-lb)
  - M7 . . . . . 15 Nm (11 ft-lb)
- Cylinder head to cylinder block
  - stage 1 . . . . . 30 Nm (22 ft-lb)
  - stage 2 . . . . . +80°
  - stage 3. . . . . +80°
- Exhaust manifold to cylinder head . . . 22 Nm (17 ft-lb)
- Intake manifold to cylinder heads . . . . 15 Nm (11 ft-lb)
- Radiator cooling fan to coolant pump . . . . . 40 Nm (30 ft-lb)
- Spark plugs to cylinder head . . . 23±3 Nm (17±2 ft-lb)

To remove cylinder head (M60 engine, right cylinder head)

This procedure covers removal of the right (passenger's side) cylinder head only.

> ***NOTE —***
> *Special service tools are required to adjust camshaft timing as part of cylinder head installation. Be sure to review the adjustment procedure outlined in* **117 Camshaft Timing Chain** *before removing the cylinder head.*

1. Working beneath rear seat, disconnect negative (–) terminal of battery.

> ***CAUTION —***
> *Disconnecting the battery cables may erase fault codes stored in control unit memory.*

2. With engine cold, drain engine coolant from radiator and right cylinder block. Remove radiator fan and fan shroud. See **170 Radiator and Cooling System**.

> ***WARNING —***
> *Allow the cooling system to cool before opening or draining the system. Hot coolant can scald and burn.*

> ***NOTE —***
> - *The radiator cooling fan nut (32 mm wrench) has left-hand threads.*
> - *There are two block drains, one on either side of the engine. It is not necessary to remove both plugs if only one head is being removed.*

3. Remove right exhaust manifold. See **180 Exhaust System**. Discard mounting nuts.

4. Remove upper section of air filter housing, complete with mass air flow sensor and ducting. Remove lower section of air filter housing.

5. Remove ignition coils and spark plugs. See **120 Ignition System—DME**.

6. Remove intake manifold.
   - Remove cover from rear of intake manifold. See Fig. 49.
   - Remove intake manifold nuts from left and right cylinder heads, noting arrangement of rubber grommets beneath nuts.
   - Lift intake manifold together with throttle housing from cylinder heads.

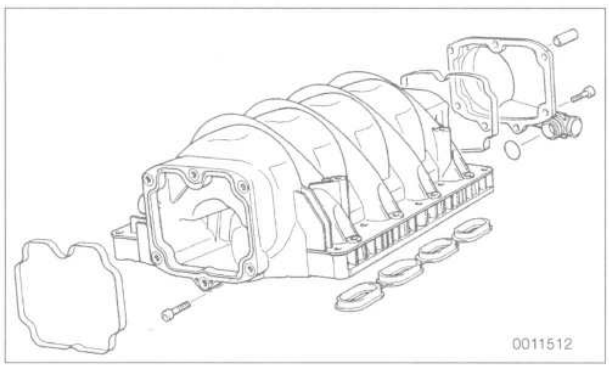

Fig. 49. Crankcase ventilation pressure regulating valve cover at rear of intake manifold (**arrow**).

7. Remove left and right cylinder head covers. See **116 Cylinder Head and Valvetrain**.

8. Remove oil supply lines above camshafts on right cylinder head.

9. Remove timing chain tensioner from side of right cylinder head.

10. Remove upper timing chain cover from front of right cylinder head.
    - unfasten oil dipstick guide tube from timing chain cover and oil pan, remove guide tube from oil pan (plug opening in oil pan)
    - remove camshaft position sender mounting bolt and remove sender from cover
    - remove timing chain cover mounting bolts (qty. 9) and carefully separate cover from cylinder head

11. Remove coolant crosspipe (accumulator) from rear of engine.
    - unbolt coolant expansion tank and set aside
    - remove diagnostic connector retaining clip and free connector from bracket
    - separate main harness plug and set wiring harness aside, see Fig. 50.
    - disconnect and label harness connectors at crosspipe
    - disconnect ground wire at rear engine lifting bracket
    - disconnect all coolant hoses from crosspipe
    - remove crosspipe mounting bolts and carefully remove pipe

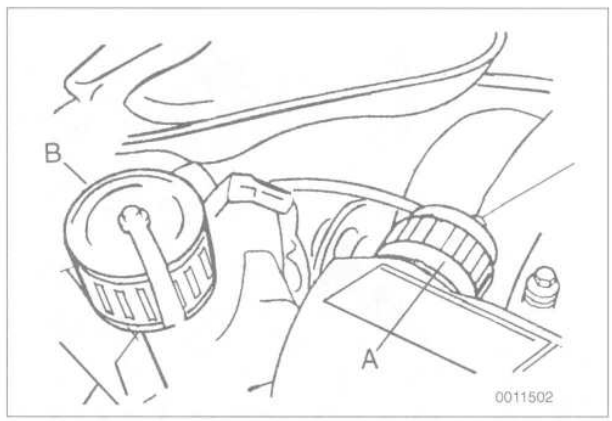

Fig. 50. Main wiring harness connector (**A**) and diagnostic connector (**B**).

12. Turn engine over in direction of normal rotation until cylinder no. 1 is at TDC overlap position (i.e. intake and exhaust valves open, 360° away from TDC compression).

NOTE—
TDC position is marked on the crankshaft vibration damper as "0/T".

13. Loosen three top bolts on left camshaft sprockets of left and right cylinder heads.

CAUTION—
- *Hold camshaft stationary (at hex on camshaft) when loosening or tightening camshaft sprocket mounting bolts.*
- *Do not damage cylinder head casting when using open end wrench at camshaft hex. If necessary, grind or machine wrench to fit into opening in cylinder head.*

NOTE—
Assume left and right orientation as sitting in driver's seat.

14. Turn engine over in direction of normal rotation until cylinder no. 1 is at TDC ignition.

15. Loosen remaining three bolts of left camshaft sprockets on both cylinder heads.

16. While holding camshaft stationary, loosen and remove intake camshaft sprocket bolts on right cylinder head. Remove sprocket and secure chain with wire.

17. Slowly turn engine over (away from direction of normal rotation) until cylinder no. 1 is at 45° before TDC (BTDC). See Fig. 51.

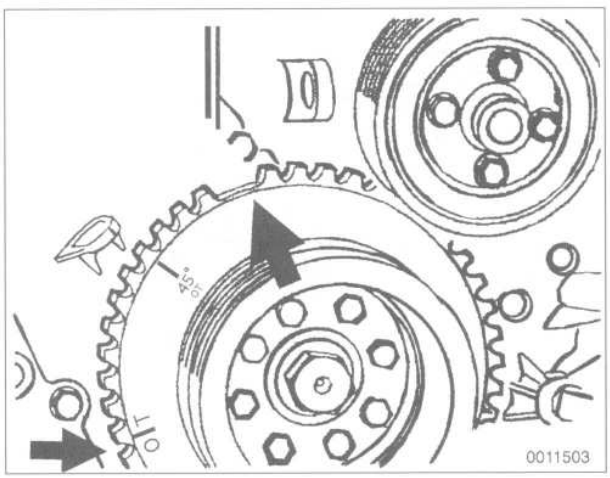

Fig. 51. Crankshaft vibration dampener positioned at 45° BTDC. Note position of 0/T mark and gap in toothed wheel (**arrows**).

18. Remove upper bolt from inner timing chain guide rail. See Fig. 52.

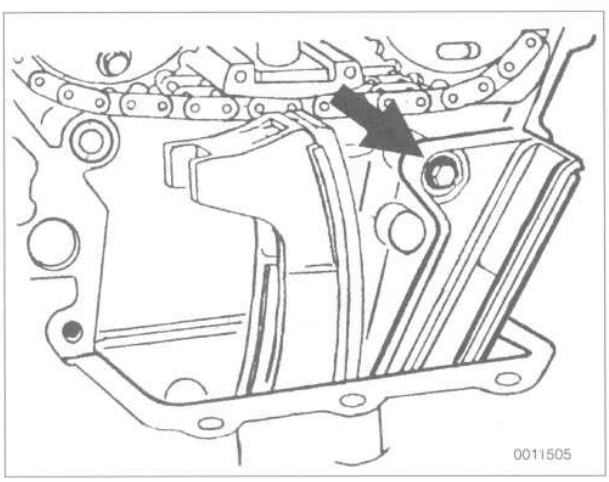

Fig. 52. Timing chain inner guide rail mounting bolt (**arrow**).

19. Using BMW special tool no. 11 2 250 or an equivalent, loosen cylinder head bolts in stages, working diagonally from outermost bolts toward center of head. Remove cylinder head.

> ***CAUTION —***
> *Torx-type cylinder head bolts should not be reused. They are stretch-type bolts and must always be replaced whenever loosened.*

NOTE —

- *BMW special tool no. 11 2 250 is a thin-walled Torx E12 socket and extension wrench with a 1/2 inch drive. The cylinder head bolts are recessed into the head below the camshaft towers with little working space.*

To install cylinder head (M60 engine, right cylinder head)

Prior to installation, clean cylinder head and gasket surfaces. Remove all foreign matter and liquid from head bolt holes in cylinder block.

> ***CAUTION —***
> *A minimum waiting time must be observed before installing the cylinder head if the camshafts were previously removed. When the camshafts are removed, the hydraulic cam followers tend to expand. This expansion causes increased valve lift, possibly resulting in valve-to-piston contact during cylinder head installation.*

Cylinder head installation waiting times (after cylinder head reassembly)

- at or above 68°F (20°C) . . . . . 10 minutes
- 50-68°F (10-20°C) . . . . . 30 minutes
- 32-50°F (0-10°C) . . . . . 75 minutes

NOTE —

- *Special service tools are required to adjust camshaft timing as part of cylinder head installation. Be sure to review the adjustment procedure outlined in* **117 Camshaft Timing Chain** *before beginning the job.*
- *If the cylinder head has been machined, a special 0.3 mm thicker gasket should be installed. The thicker gasket is available from an authorized BMW dealer.*

1. Apply thin bead of sealer (Hylomar SQ 32 M) to joint where lower timing chain cover mates cylinder block.

2. Place a new cylinder head gasket into position. Make sure dowel sleeves are correctly positioned in block and not damaged.

3. With crankshaft at 45° BTDC, set cylinder head in position.

4. Lightly lubricate new cylinder head bolts. Loosely install bolts with washers. Thread all bolts in finger tight.

> ***CAUTION —***
> - *Torx-type cylinder head bolts should not be reused. They are stretch-type bolts and must always be replaced whenever loosened.*
> - *Do not wash protective coating from new bolts.*
> - *Check that all washers for the head bolts are in place before installing bolts. Some washers may be staked to the cylinder head.*

5. Tighten cylinder head bolts in stages, alternately and diagonally in the sequence shown. See Fig. Fig. 53.

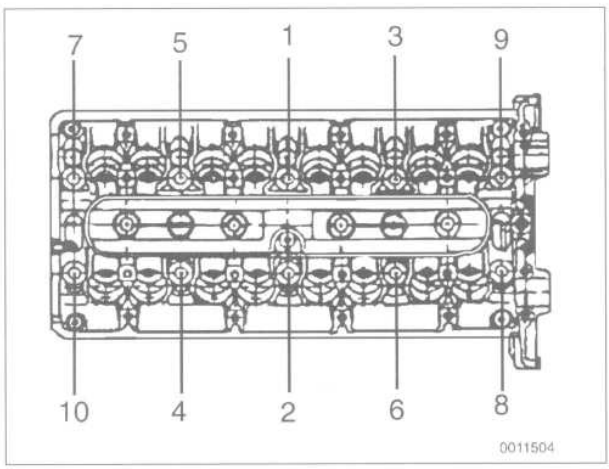

Fig. 53. Cylinder head bolt tightening sequence (M60 engine).

> ***WARNING —***
> *The use of a special tool (BMW Tool No. 11 2 110) or a suitable protractor is required to tighten head bolts to a specified torque angle. See Fig. 28, given earlier.*

Tightening Torques

- Cylinder head to cylinder block (M60 engines)
  - stage 1 . . . . . 30 Nm (22 ft-lb)
  - stage 2 . . . . . +80°
  - stage 3 . . . . . +80°

6. Install chain guide rail and guide rail mounting bolt.

7. Position camshafts and crankshaft at TDC and lock shafts in position using BMW special tools. See **117 Camshaft Timing Chain**.

8. Install intake sprocket (right cylinder head) to timing chain and camshaft with arrow on sprocket pointing up and dowel pin for camshaft position sensor in lower left. See Fig. 54.
   - Bolt holes in sprocket should be centered to threaded bores in camshaft. Tighten sprocket bolts finger tight.

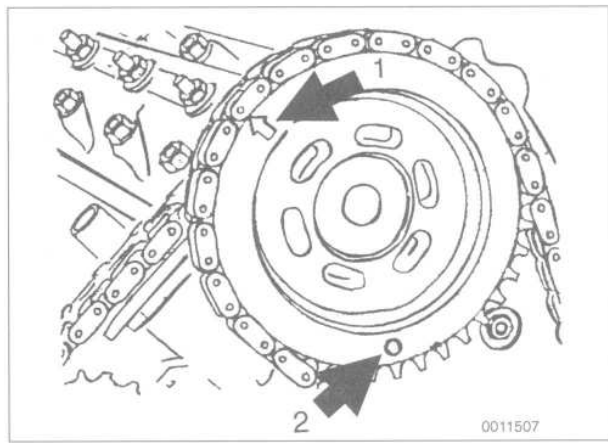

Fig. 54. Intake sprocket correctly aligned to camshaft with arrow pointing up (**1**) and sensor pin in lower left (**2**).

9. Adjust camshaft timing and tighten sprocket mounting bolts as described in **117 Camshaft Timing Chain**.
   - Install front timing chain cover, using new gaskets and new O-ring for tensioner oil feed (between cover and cylinder head).

10. Remove protective film from gaskets. Seal lower corners of cover to cylinder head. Tighten bolts in two stages, tightening cover-to-cylinder block bolts first.

11. Install camshaft timing chain tensioner.

12. The remainder of installation is the reverse of removal, noting the following special instructions:
    - Use new gaskets when mounting the intake manifold. Tighten nuts finger tight first, then torque to specification in stages working diagonally from inside to outside.
    - Refill and bleed cooling system as described in **170 Radiator and Cooling System**.
    - Change the engine oil and filter as described in **020 Maintenance Program**.

> ***CAUTION —***
> *To prevent damaging engine electronic systems, be sure to install all ground wires previously removed.*

> ***NOTE —***
> *Tightening torques are given on the following page.*

Tightening Torques—M60 engine

- Coolant drain plug to cylinder block . . 28 Nm (20 ft-lb)
- Camshaft timing chain sprocket to camshaft. . . . . 15 Nm (11 ft-lb)
- Camshaft timing chain tensioner to cylinder head . . . . . 40 Nm (30 ft-lb)
- Camshaft timing chain cover to cylinder head/cylinder block . . . . . 10 Nm (89 in-lb)
- Cylinder head cover to cylinder head/timing chain cover
  - M6 . . . . . 10 Nm (89 in-lb)
  - M7. . . . . 15 Nm (11 ft-lb)
- Cylinder head to cylinder block
  - stage 1 . . . . . 30 Nm (22 ft-lb)
  - stage 2 . . . . . +80°
  - stage 3 . . . . . +80°
- Exhaust manifold to cylinder head . . . 22 Nm (17 ft-lb)
- Intake manifold to cylinder head . . . . 15 Nm (11 ft-lb)
- Radiator cooling fan to coolant pump . . . . . 40 Nm (30 ft-lb)
- Spark plugs to cylinder head . . . 23±3 Nm (17±2 ft-lb)

116 Cylinder Head and Valvetrain

GENERAL 116-1

CYLINDER HEAD COVER GASKET REPLACEMENT 116-2
- To replace cylinder head cover gasket (M20 engine) 116-2
- To replace cylinder head cover gasket (M30 engine) 116-2
- To replace cylinder head cover gasket (M50 engine) 116-3
- To replace cylinder head cover gaskets (M60 engine) 116-5

VALVE ADJUSTMENT (M20 and M30 Engines) 116-6
- To adjust valve clearance 116-6

CYLINDER HEAD DISASSEMBLY AND ASSEMBLY 116-7
- To disassemble cylinder head (M20 engine) 116-7
- To disassemble cylinder head (M30 engine) 116-10
- To disassemble cylinder head (M50 engine) 116-11
- To disassemble cylinder head (M60 engine) 116-13

CYLINDER HEAD AND VALVETRAIN RECONDITIONING 116-15
- Cylinder Head 116-15
- Camshaft 116-16
- Hydraulic Cam Followers (M50/M60 engines) 116-17
- To check hydraulic cam followers 116-17
- Rocker Arms and Rocker Arm Shafts (M20 and M30 engines) 116-17
- Valve Guides 116-18
- Valves 116-18
- Testing Valves for Leakage 116-18
- Valve Stem Oil Seals 116-18
- Valve Seats 116-19
- Valve Springs 116-20

TABLES

a. Engine Application Codes 116-1
b. Valve Clearance Specifications 116-7
c. Camshaft Identification (M60 Engine) 116-15
d. Cylinder Head Height 116-16
e. Camshaft Specifications 116-16
f. Valve Guide Specifications 116-19
g. Valve Specifications 116-19
h. Valve Seat Dimensions 116-21
i. Valve Seat Replacement Specifications 116-22

GENERAL

This repair group covers cylinder head and valvetrain service and repair. Most of the repairs described here require that the cylinder head first be removed as described in **113 Cylinder Head Removal and Installation**.

NOTE —

- *For timing chain repair information on 535i models (M30 engines) and 1991 and later 525i models (M50 and M50TU engines), see* **117 Camshaft Timing Chain**. *For timing belt repair information on 1989 and 1990 525i models (M20 engine), see* **118 Camshaft Timing Belt**.

- *The 1993 and later 525i models (M50TU engines) are equipped with a DME-controlled variable valve timing system called VANOS. Repair information on this system is covered in* **117 Camshaft Timing Chain**.

Special tools are required for most cylinder head service, disassembly, and reconditioning described in this repair group. Be sure to read each procedure thoroughly before starting a job to determine which tools and equipment will be necessary.

NOTE —

If it is determined that the cylinder head will require significant reconditioning work, a remanufactured cylinder head may be a good alternative. Remanufactured cylinder heads are available from an authorized BMW dealer.

The information given in this repair group is organized according to engine code. **Table a** is a basic list of engine application codes. For additional engine application information, see **100 Engine—General**.

Table a. Engine Application Codes

Model	Engine code
525i/525iT 1989-1990 1991-1992 1993 and later	 M20 (single overhead cam, 2.5 liter) M50 (twin-cam, 2.5 liter) M50TU (twin-cam 2.5, liter with VANOS)
535i	M30 (single overhead cam, 3.5 liter)
530i/540i	M60 (V8, 3.0/4.0 liter)

NOTE —

- *Unless otherwise specified, the M50 engine code applies to both non-VANOS and VANOS-equipped M50 engines.*
- *Unless otherwise specified, the M60 engine code applies to both 3.0 and 4.0 liter V8 engines.*

CYLINDER HEAD COVER GASKET REPLACEMENT

To replace cylinder head cover gasket (M20 engine)

1. Remove the intake manifold support bracket. See Fig. 1.

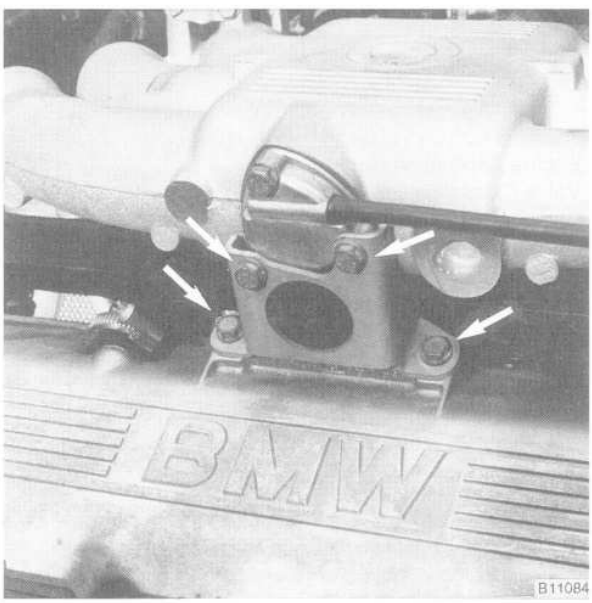

Fig. 1. Intake manifold support bracket mounting bolts (**arrows**).

2. Disconnect the breather hose from the cover and remove the eight cover mounting nuts. See Fig. 2.
3. Lift off the ignition wire cover and place it out of the way. Lift off the cylinder head cover and its gasket.
4. Install a new gasket and the cylinder head cover.
5. Install the support bracket(s).
6. Tighten the mounting nuts in the sequence shown in Fig. 3. Reconnect the breather hose.

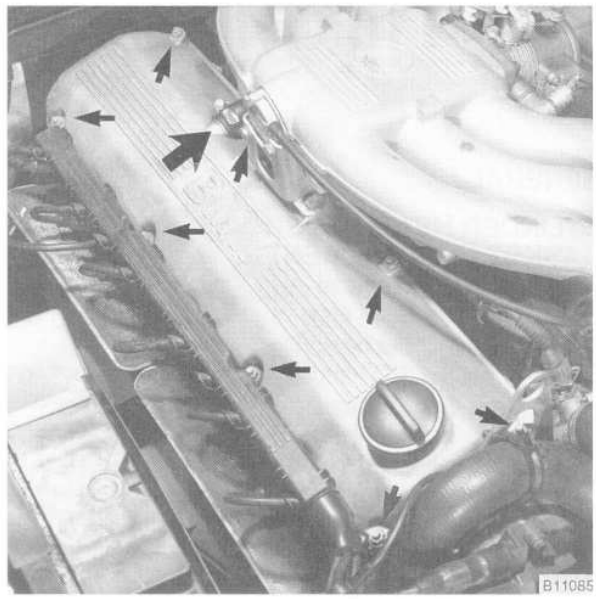

Fig. 2. Breather hose and cylinder head cover mounting nuts (**arrows**).

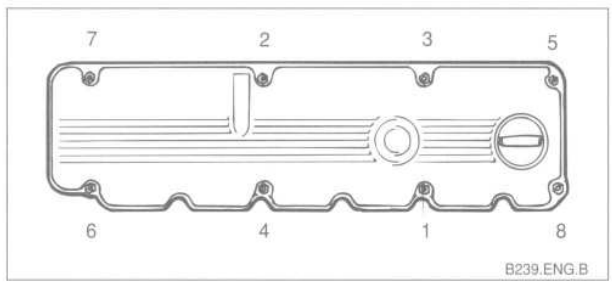

Fig. 3. Cylinder head cover mounting nut tightening sequence.

Tightening Torque

- Cylinder head cover mounting nuts . . . . . 10 Nm (89 in-lb)

To replace cylinder head cover gasket (M30 engine)

1. Loosen the hose clamps for the intake air ducts. Disconnect the harness connector from the air flow sensor. Remove the idle air stabilizer bracket mounting nut and pull the valve out of the intake air boot. See Fig. 4.
2. Remove the retaining clips from the underside of the air flow sensor and remove the sensor. See Fig. 5.

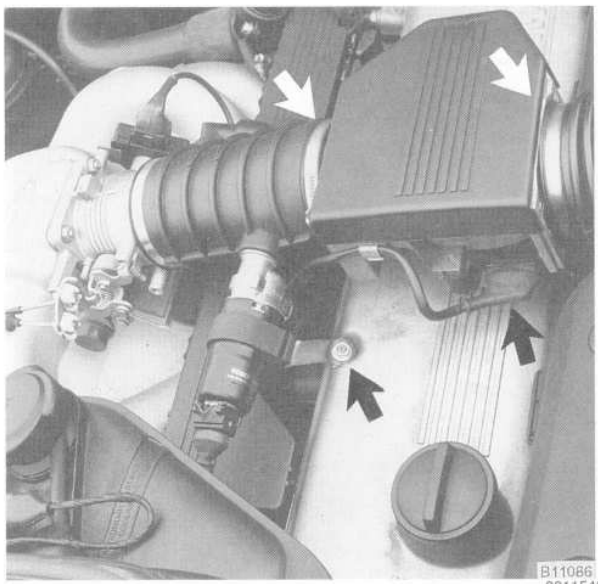

Fig. 4. Idle air stabilizer valve and bracket, air flow sensor connector, and hose clamps to be removed/disconnected (**arrows**).

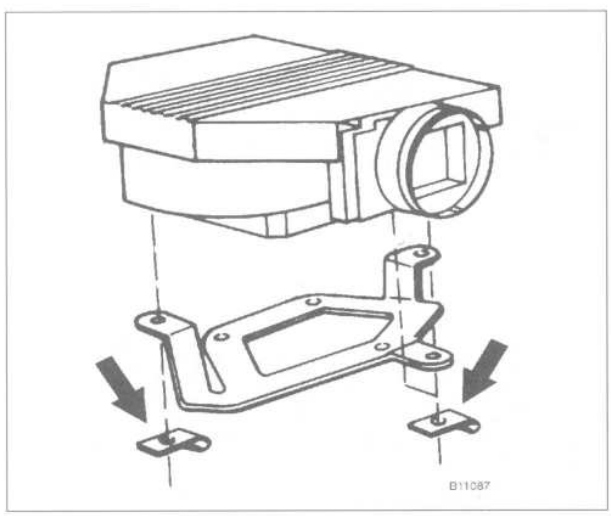

Fig. 5. Air flow sensor mounting clips on M30 engine (**arrows**).

3. Disconnect the center wire from the ignition coil. Disconnect the ignition wires from the spark plugs. Remove the ignition wiring harness mounting nuts and place the harness out of the way.

4. Disconnect the breather hose from the cylinder head cover. Remove the nuts and bolts shown in Fig. 6. Lift off the cylinder head cover and its gasket.

5. Install a new gasket and the cylinder head cover.

6. Installation is the reverse of removal. Be sure to reconnect all hoses. Tighten the mounting nuts and bolts using a similar sequence as shown above in Fig. 3.

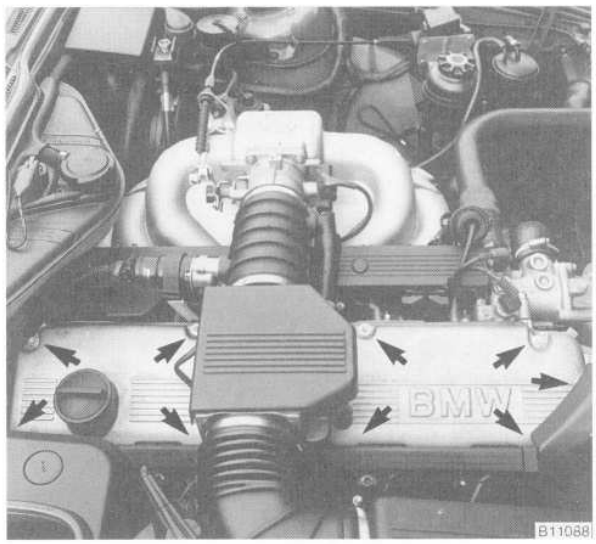

Fig. 6. Cylinder head cover fasteners (**arrows**).

Tightening Torque

- Cylinder head cover to cylinder head . . . . . 10 Nm (89 in-lb)

To replace cylinder head cover gasket (M50 engine)

1. Disconnect the negative (–) battery cable.

> ***WARNING —***
> *Disconnecting the battery cables may erase fault codes stored in control unit memory.*

NOTE —
On late model cars, the battery is mounted beneath the rear seat cushion.

2. Disconnect the crankcase ventilation hose fitting from the cylinder head cover. See Fig. 7.

3. Remove the top engine covers. See Fig. 8.

4. Disconnect ignition coil harness connectors from the coils. Remove the ignition coil mounting nuts and lift coils straight off. See Fig. 9.

5. Remove the cylinder head cover mounting bolts and remove the cylinder head cover. See Fig. 10.

NOTE —
The cylinder head cover mounting bolt insulators and gaskets must be reinstalled in the same order. Make note of their arrangement during removal.



Fig. 7. Crankcase ventilation hose fitting to be removed (**arrows**).



Fig. 8. Remove top engine cover by prying out plugs and removing nuts (**A**). Make sure rubber insulators (quantity 4) on either side of cover do not fall off during cover removal (**arrows**).

6. Install a new gasket and cylinder head cover. Be sure the half-moon shaped parts of the gasket correctly seat into the rear of the cylinder head and the spark plug gaskets are correctly positioned in the cylinder head cover.
7. The remainder of installation is the reverse of removal. Be sure to reconnect all hoses and ground wires.



Fig. 9. Ignition coil being removed. Coil is retained by two nuts (**arrows**).

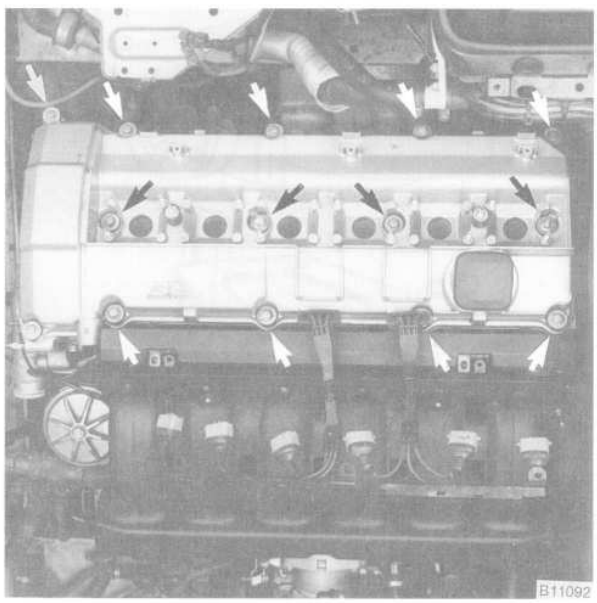

Fig. 10. Cylinder head cover mounting bolts (**arrows**).

Tightening Torque

- Cylinder head cover to cylinder head . . . . . 10 Nm (89 in-lb)

CYLINDER HEAD COVER GASKET REPLACEMENT

To replace cylinder head cover gaskets (M60 engine)

This procedure covers replacement of both left and right cylinder head cover gaskets.

1. Working from beneath rear seat, disconnect negative (–) battery cable from battery.

> ***WARNING —***
> *Disconnecting battery cables may erase fault codes stored in control unit memory.*

2. Remove plastic cover from center top of engine. Remove plastic covers from top of left and right cylinder head covers.
   - Pry out plugs from covers. Remove nuts and bolts from beneath plugs. Lift off covers, removing center cover first. See Fig. 11.

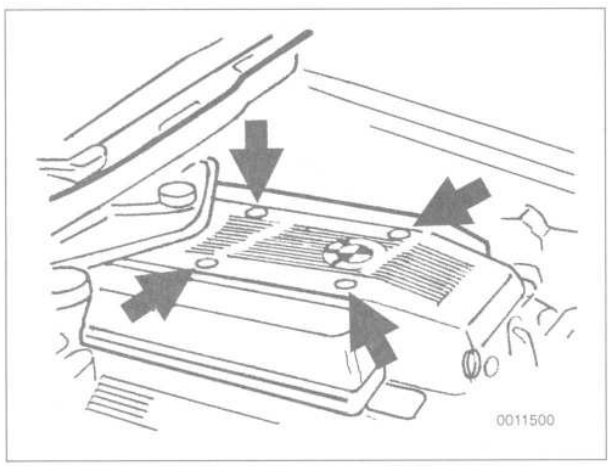

Fig. 11. Remove top engine cover by prying out plugs (**arrows**) and removing nuts from beneath plugs. Removal of plastic covers from cylinder head is similar.

3. Remove upper section of air filter housing.
   - Loosen hose clamps for intake air ducts.
   - Disconnect harness connector from mass air flow sensor.
   - Remove air flow sensor and ducting.
4. Disconnect harness connectors from ignition coils. Remove ignition coil mounting nuts and pull coils straight up to remove. See Fig. 12.

NOTE —
Note ground strap at cylinders #3 and #7. See **120 Ignition System—DME**.



Fig. 12. Ignition coil being removed.

5. Remove harness connector from oil level sensor in right side of oil pan. Disconnect wiring from wiring guide.
6. Separate main wiring harness plug. Unclip diagnostic connector from bracket. See Fig. 13.

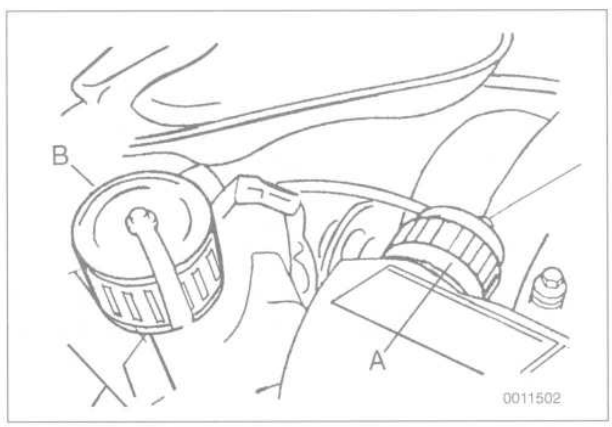

Fig. 13. Main engine wiring harness connector (**A**) and diagnostic connector (**B**) at rear of engine compartment.

7. Working in center of engine, disconnect and label all harness connectors from left and right wiring harness ducting.
   - Camshaft position sensor
   - Idle actuator
   - Intake air temperature sensor
   - Knock sensors–**connectors must not be interchanged**
   - Throttle potentiometer
   - TDC sensor

CAUTION —
Do not interchange the knock sensor harness connectors. Serious engine damage may result. Be sure to label connectors to ensure correct reconnection.

8. Remove mounting nuts from left and right wiring harness ducting. Lift ducting off cylinder head covers and set aside.

9. Remove ground wire from rear engine lifting bracket and disconnect harness connectors from engine coolant temperature sensors at rear of engine. See Fig. 14.

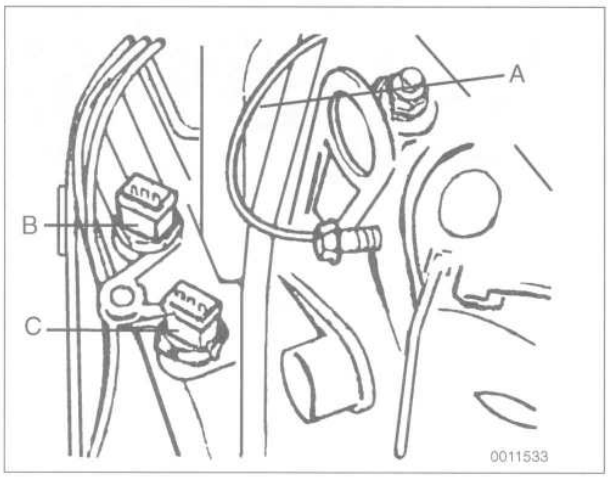

Fig. 14. Ground wire for ignition coils (**A**) and coolant temperature sensors (**B**, white connector, **C**, black connector).

10. Remove cylinder head cover cap nuts and remove covers. Remove inner and outer gaskets.

11. Apply a thin coating of glycerine or suitable rubber lubricant to inner and outer gaskets.

12. Install inner gasket evenly into inner gasket groove in cylinder head cover, pressing four corners into position first and working evenly into groove. Repeat for outer gasket.

13. Apply thin bead of sealer (Hylomar® SQ 23) to gasket surface at joint where upper timing chain cover meets cylinder head.

14. Install outer gasket evenly into outer gasket groove in cylinder head, pressing rear corners into position first and working evenly into groove.

15. The remainder of installation is reverse of removal. Install all valve cover cap nuts by hand, then tighten evenly and in stages, working diagonally from inside to outside.

WARNING —
Be sure harness connectors are correctly installed, especially at knock sensors. Incorrect installation of connectors at knock sensors may result in serious engine damage.

Tightening Torque

- Cylinder head cover to cylinder head and timing chain cover
  - M6 . . . . . 10 Nm (89 in-lb)
  - M7 . . . . . 15 Nm (11 ft-lb)

VALVE ADJUSTMENT (M20 and M30 engines)

Valve adjustment should be done as part of scheduled maintenance. For a listing of recommended adjustment intervals, see **020 Maintenance Program**.

A special tool (BMW Tool No. 11 3 070) is available to help turn the rocker arm eccentric when setting valve clearances. As an alternative, a tool can be easily fabricated from stiff wire (approximate diameter of 3/32 in.). The valves can be adjusted with the engine hot or cold.

To adjust valve clearance

1. Remove the cylinder head cover as described above.

2. Using a socket wrench on the vibration damper nut, hand-turn the crankshaft clockwise until the No. 1 cylinder's camshaft lobes are pointing approximately downward (valves fully closed).

NOTE —
- *The no. 1 cylinder is the one closest to the radiator end of the engine.*
- *It is much easier to reach the crankshaft vibration damper nut after removing the radiator cooling fan and plastic radiator cowling as described in **170 Radiator and Cooling System**.*
- *Crankshaft rotation can be done more easily if the spark plugs are first removed.*

3. Measure the valve clearances of the no. 1 cylinder intake and exhaust valves using a feeler gauge. See Fig. 15. Compare the measured clearance values with the specifications listed in **Table b**.

NOTE —
Valve clearance specifications for both the intake valves and the exhaust valves are the same.

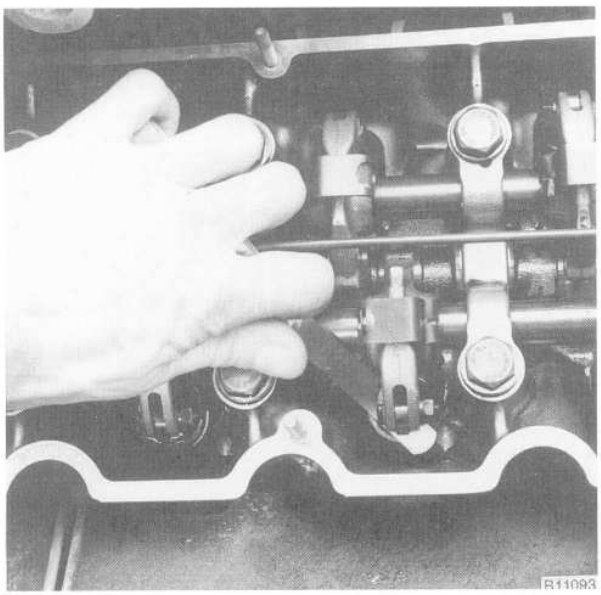

Fig. 15. Valve clearance being measured. Feeler gauge is inserted between rocker arm eccentric and valve tip.

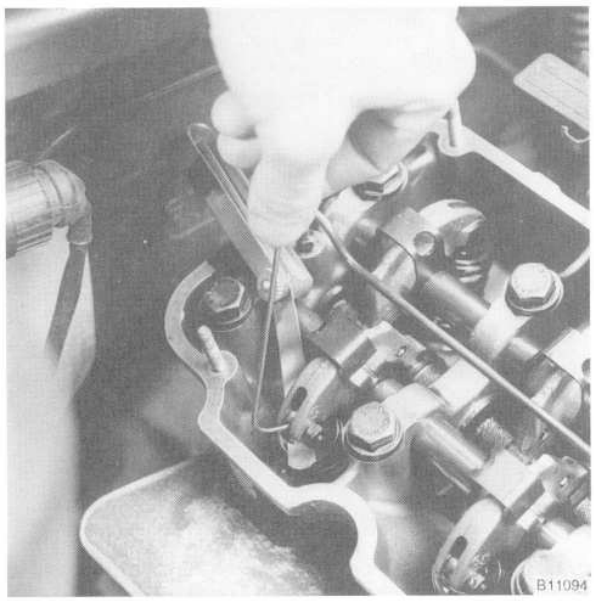

Fig. 16. Valve clearance being adjusted. Stiff wire hook inserted into hole in eccentric.

Table b. Valve Clearance Specifications

Model	Engine warm (coolant temp. above 176°F (80°C)	Engine cold (coolant temp. below 95°F (35°C)
525i (M20)	0.30 mm (0.012 in.)	0.25 mm (0.010 in.)
535i (M30)	0.35 mm (0.014 in.)	0.30 mm (0.012 in.)

4. If the valve clearance is incorrect, loosen the setscrew nut (locknut) with a 10 mm box-end wrench. Rotate the eccentric until the specified clearance is obtained and tighten the nut. See Fig. 16.

Tightening Torque

- Rocker arm eccentric locknut . . . . . 10 ± 1 Nm (7 ± 0.5 ft-lb)

5. Repeat the adjusting procedure for each pair of valves. Follow the sequence listed below. Rotate the crankshaft until the camshaft lobes for the next cylinder are pointing approximately downward (valves fully closed).

NOTE —

Rotate crankshaft approximately 1/3 of a turn (120°) between adjustments.

Valve Adjustment Sequence

- Adjustment sequence (cylinder no.) 1–5–3–6–2–4

6. Recheck all clearances before installing the cylinder head cover as described above. This will require two complete rotations of the crankshaft pulley.

CYLINDER HEAD DISASSEMBLY AND ASSEMBLY

Some of the disassembly procedures recommend the use of BMW special tools. Many of these tools are expensive and are only available through an authorized BMW dealer. If the special tools are not available, one alternative is to remove the cylinder head and have it disassembled by an authorized BMW dealer. Be sure to read each procedure thoroughly before starting a job to determine which special tools and equipment will be necessary.

NOTE —

On M20 and M30 engines, the cylinder head must first be removed to remove the camshaft.

To disassemble cylinder head (M20 engine)

1. Remove the cylinder head as described in **113 Cylinder Head Removal and Installation**.

2. Remove the camshaft sprocket mounting bolt. See Fig. 17. Remove the rotor adaptor and the sprocket from the camshaft.

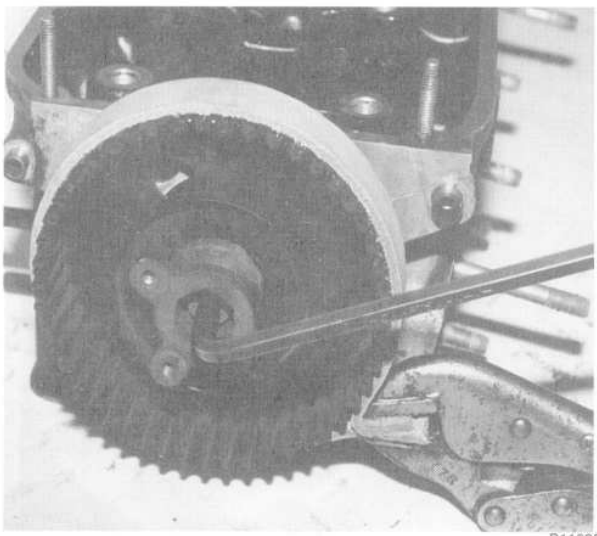

Fig. 17. Distributor rotor adaptor and camshaft sprocket mounting bolt being removed. Sprocket is being held stationary with a strip of leather and Vise-grips. On most cars, rotor adapter is retained by a Torx bolt (E12 wrench size).

NOTE —

It may be necessary to immobilize the camshaft drive belt sprocket while breaking the bolt loose.

3. Remove the camshaft oil seal housing mounting bolts. Remove the housing by rotating it off the camshaft. See Fig. 18.



Fig. 18. Camshaft oil seal housing at front of cylinder head. Rotate oil seal carrier during removal (**arrow**).

4. Adjust the valves to maximum clearance by loosening the adjusting eccentric locknut. Rotate the eccentric until the adjusting hole is facing inward.

5. Remove the rocker arm retainers by lifting them straight off. Note that the straight leg of the clamp fits into the slot in the rocker arm shaft. Lift out the rocker arm shaft guide plate. See Fig. 19.

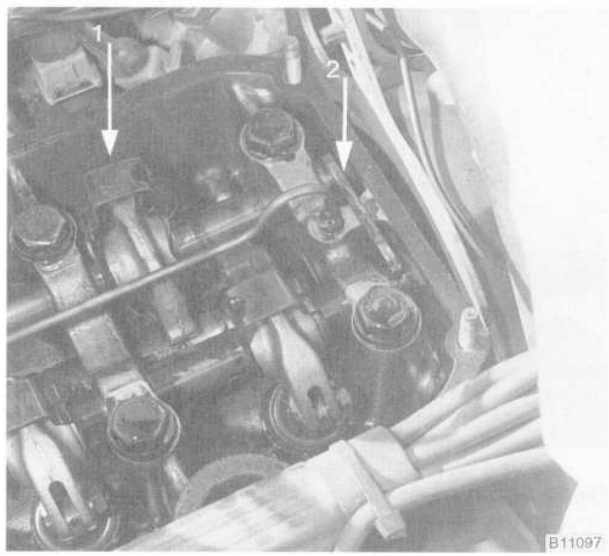

Fig. 19. Rocker arm retainer (**1**) and rocker arm shaft guide plate (**2**). Note how guide plate fits into notch in rocker arms shafts.

6. Remove the four rubber plugs from the front and rear of the cylinder head. See Fig. 20.

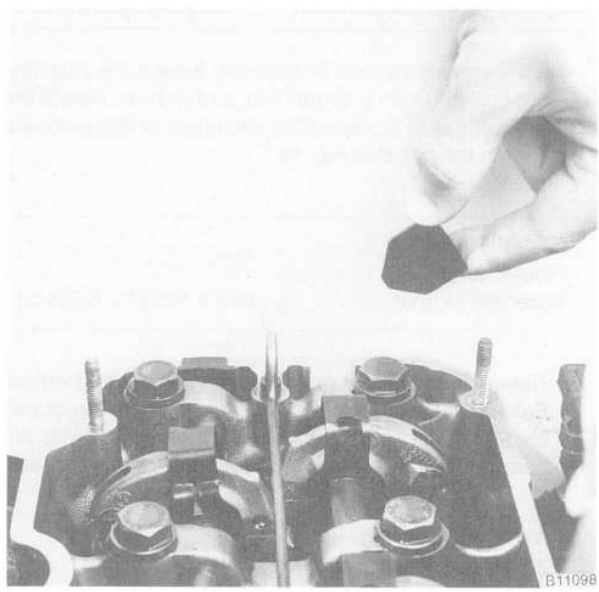

Fig. 20. Rubber retaining plug being removed from cylinder head.

7. Temporarily mount the distributor rotor adaptor to the front of the camshaft.

8. Using the rotor adaptor mounting bolt, rotate the camshaft clockwise until the no. 6 intake and exhaust valves are both open (overlapped). Slide the no. 1 exhaust-side rocker arm off the top of the valve. See Fig. 21.

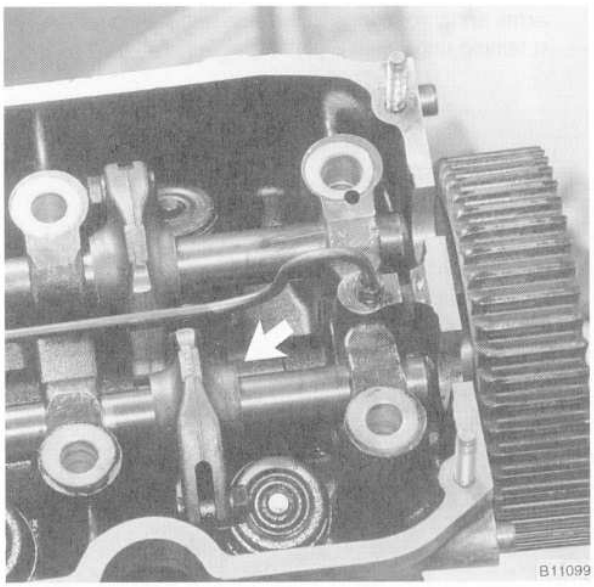

Fig. 21. Rocker arm positioned (**arrow**) for removal of exhaust-side rocker arm shaft.

9. Slowly rotate the camshaft while relieving the valve spring tension on the exhaust-side rocker arms and sliding the rocker arms off the top of their valves.

10. If applicable, remove the threaded plugs from the front of the rocker arm shafts, then thread a bolt or slide hammer into the end of the shaft to aid in removal.

NOTE —
If the shaft turns while trying to remove the plug, place a cylinder head bolt in the no. 1 cylinder head bolt hole. This will hold the shaft stationary.

11. Remove the exhaust-side rocker arm shaft by pulling it out from the front of the head.

CAUTION —
If it is necessary to drift the shaft out, strike the drift using firm, hard blows. Tapping on the drift will cause the end of the shaft to mushroom, making it difficult to remove. If the end of the shaft does become mushroomed, grind or dress the end of the shaft before driving it through.

NOTE —
Label each rocker arm assembly as it is removed. Rocker arm assemblies should always be reinstalled in their original locations.

12. Remove the intake-side rocker arm shaft using the above procedure.

13. Carefully rotate the camshaft out of the head.

Remove the valves using a standard C-type valve spring compressor. Label each valve assembly as it is removed. Remove and discard the valve stem oil seals from the valve guides.

Reassembly is the reverse of disassembly. Prior to installation, check all components for wear as described below under **Cylinder Head Reconditioning**. Be sure all parts are installed in their original positions. When installing the rocker arm shafts, the notches for the guide plate and the small oil bores should be facing in and the large oil bores should be facing down towards the valve guides. See Fig. 22.

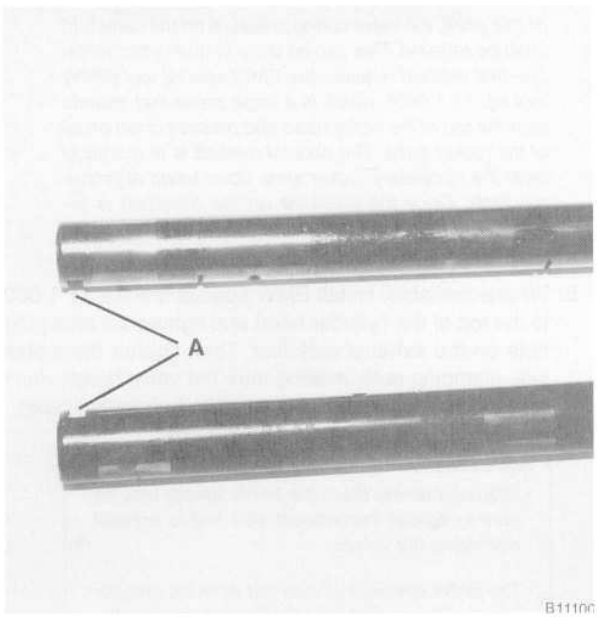

Fig. 22. Install rocker shafts with guide plate notches (**A**) facing in. Small oil holes face in and large oil holes face down.

Lubricate the camshaft prior to installation. Coat the camshaft oil seal lip and the housing O-ring with motor oil before installation. Install the camshaft sprocket and the distributor rotor adaptor so the guide pin correctly aligns with the guide hole in the sprocket and adaptor.

Tightening Torques

- Oil sprayer bar fittings . . . . 6 to 8 Nm (4.5 to 5.5 ft-lb)
- Ignition rotor adaptor to camshaft . . . . . 60 ± 5 Nm (44 ± 4 ft-lb)
- Exhaust manifold to cylinder head . . . 22 Nm (17 ft-lb)
- Intake manifold to cylinder head . . . . . 22 Nm (17 ft-lb)

To disassemble cylinder head (M30 engine)

1. Remove the cylinder head as described in **113 Cylinder Head Removal and Installation**.

2. Remove the oil sprayer bar mounting bolt from the center of the head. Discard the bolt and the crush-type washers.

3. Adjust all valve clearances so that the hole in the eccentric cam points inward (maximum clearance).

4. Rotate the camshaft until the cutouts in the front flange are aligned with the guide plate mounting bolts on the front of the cylinder head. Remove the two bolts.

NOTE —

At this point, the valve spring pressure on the camshaft must be relieved. This can be done in one of two ways. The first method requires the BMW special tool (BMW tool no. 11 1 060), which is a large press that mounts over the top of the entire head and presses down on all of the rocker arms. The second method is to manually lever the necessary rocker arms down using appropriate tools. Once the pressure on the camshaft is relieved, it can be easily withdrawn from the head.

5. Where available, install BMW special tool no. 11 1 060 to the top of the cylinder head and tighten the clamping nuts on the exhaust side first. Then tighten the intake side clamping nuts, making sure the valve heads don't contact each other. Pull the camshaft out of the head.

WARNING —

- *When tightening down the BMW special tool, be sure to tighten the exhaust side first to prevent damaging the valves.*
- *The BMW special tool may not work on cylinder heads with non-factory (aftermarket) camshafts. If an aftermarket camshaft is installed, watch the valves as the tool is slowly tightened into place.*

6. If the special tool is not available, rotate the camshaft until the least number of rocker arms are exerting pressure on the camshaft. Relieve the pressure on the remaining rocker arms by levering them down using a helper(s), and pull the camshaft out of the head.

WARNING —

The valves are under considerable pressure from the valve springs. Use extreme care when depressing the rocker arms. Wear hand and eye protection.

7. Remove the rear cover plate from the back of the head. Note the location of the sealing washer and O-ring on one of the cover mounting bolts.

NOTE —

Always replace the rear cover sealing washer and O-ring to prevent oil leaks.

8. Remove the rocker arm retainers by sliding the rocker arms and thrust rings to the side and prying off the thin retaining rings. See Fig. 23.

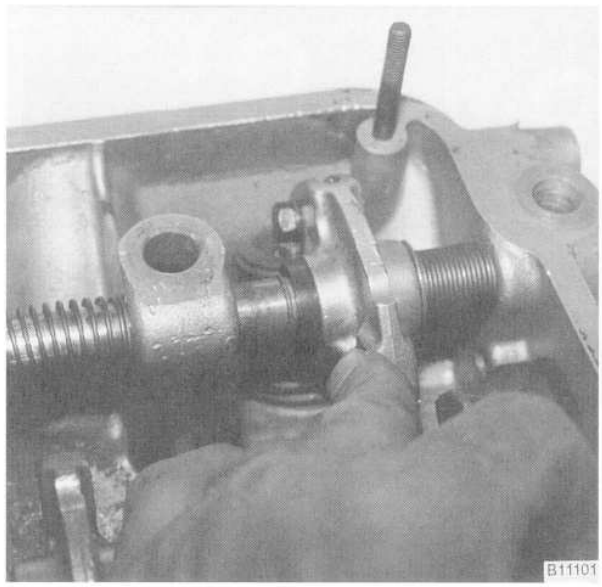

Fig. 23. Remove rocker arm retaining ring by sliding rocker arm and thrust ring to one side. Pick off retaining ring using a small screwdriver.

9. Remove the threaded end plugs from the front and rear of the rocker arm shafts.

NOTE —

If the shaft turns while trying to remove the plug, place a cylinder head bolt in a cylinder head bolt hole.

10. Remove the rocker arm shafts by either driving them out using a long drift or pulling them out using a slide hammer that threads into the threaded end of the rocker arm shaft. Catch the springs as shafts are removed.

CAUTION —

If drifting the shaft out, strike the drift using firm, hard blows while holding the head steady. Tapping on the drift will cause the end of the shaft to mushroom, making it difficult to remove and possibly damaging the head. If the end of the shaft does become mushroomed, use a small grinding stone or equivalent to redress the end of the shaft.

NOTE —

Label all parts as they are removed so they can be re-installed in their original positions. The M30 cylinder head uses a two-piece rocker arm shaft. The intake-side shafts are different from the exhaust side shafts as are the front and rear sections of each shaft.

11. Remove the valves using a standard C-type valve spring compressor. Label each valve assembly as it is removed. Remove and discard the valve stem oil seals from the valve guides.

Reassembly is the reverse of disassembly. Prior to installation, check all components for wear as described below under **Cylinder Head Reconditioning**. Be sure all parts are installed in their original positions. When installing the rocker arm shafts, the longer of the two shafts goes towards the front of the cylinder head, with the plugged ends facing out. Make sure the cutouts for the head bolts are correctly aligned and the oil holes for the rocker arms face the valve stems. Use Loctite® 270 or equivalent when installing the rocker shaft end plugs.

When installing the oil sprayer bar, make sure the arrow on the tube faces the front of the cylinder head and the new center mounting bolt has a new crush-type washer on either side of the tube. See Fig. 24. If the arrow is not visible, turn the tube upside down and position it on the cylinder head. The oil holes should be directly above the cam lobes.

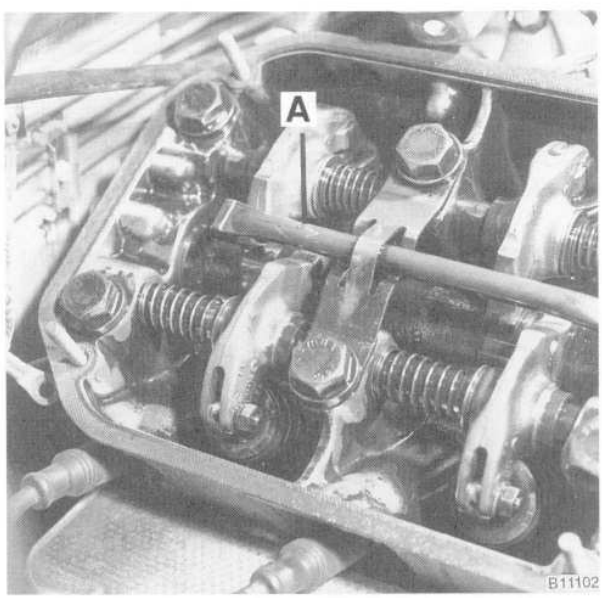

Fig. 24. Oil sprayer bar correctly installed with arrow (**A**) facing front.

CAUTION —

An incorrectly installed or loose oil sprayer bar will cause accelerated camshaft wear. Be sure to use a new center bolt and new washers. If the old bolt is reinstalled, there is danger of it loosening.

NOTE —

A new type sprayer bar hollow bolt was introduced by BMW in 1993. The new bolt is pre-coated with a locking compound and should not be reused once torqued. The new type bolt can be identified by the groove cut into the bolt head and replaces the earlier type bolt. See Fig. 25

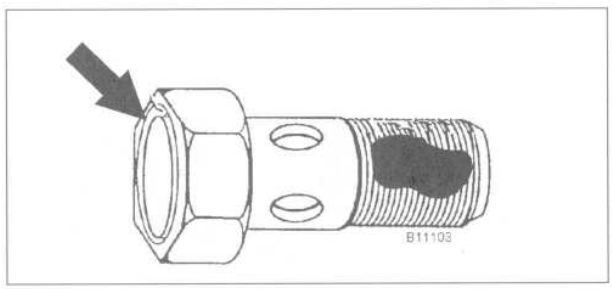

Fig. 25. New type hollow bolt with machined groove in bolt head (**arrow**) and locking compound on threads.

Lubricate the camshaft prior to installation. If the camshaft is being replaced, transfer the camshaft flange parts from the old shaft to the new shaft.

Tightening Torques

- Oil sprayer bar to cylinder head (new hollow bolt and washers) . . . . . 11 to 13 Nm (8 to10 ft-lb)
- Ignition rotor adaptor (install with Loctite® 270 or equivalent) . . . . . 23 ± 1 Nm (16.5 ± 0.5 ft-lb)
- Flange to camshaft (large nut) 145 ± 5 Nm (107 ± 3 ft-lb)
- Exhaust manifold to cylinder head . . . 15 Nm (11 ft-lb)
- Intake manifold to cylinder head. . . . . 22 Nm (17 ft-lb)

To disassemble cylinder head (M50 engine)

Special BMW service tools are highly recommended for removing and installing the camshafts and disassembling the M50 cylinder head.

WARNING —

Removal of the camshafts without the special tools can result in personal injury and/or cylinder head damage. Be sure to read the procedure through before starting a job.

CAUTION —

The process of evenly loosening the camshaft bearing cap nuts is NOT an acceptable method of removing the camshafts. The special tools should always be used to remove the camshafts.

1. Remove the cylinder head as described in **113 Cylinder Head Removal and Installation**.

2. With the cylinder head mounted to an appropriate work stand, remove the spark plugs and install BMW special tool 11 3 260/11 3 270 to the top of the cylinder head. Do not over tighten the tool mounting bolts in the spark plug holes. See Fig. 26.

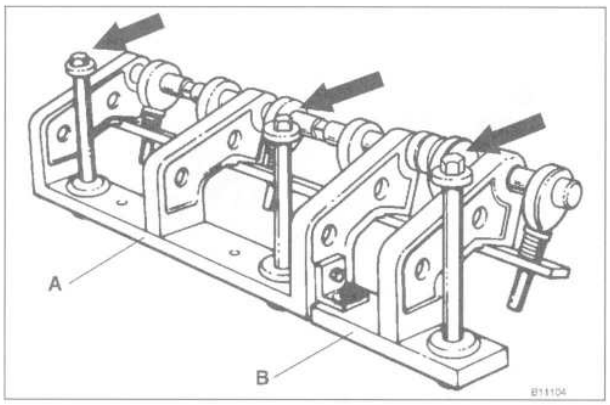

Fig. 26. Special BMW tool no. 11 3 260 (**A**) with adaptor 11 3 270 (**B**). Tool mounting bolts (**arrows**) thread into spark plug holes.

Tightening Torque

- BMW special tool 11 1 260/11 3 270 to cylinder head . . . . . 23 Nm (17 ft-lb)

NOTE —

BMW special tool 11 3 260 is for the BMW M42 4-cylinder twin-cam engine. BMW special tool no. 11 3 270 is a two-cylinder adaptor for tool no. 11 3 260.

3. Turn the tool eccentric shaft until pressure is applied to the camshaft bearing caps. See Fig. 27.

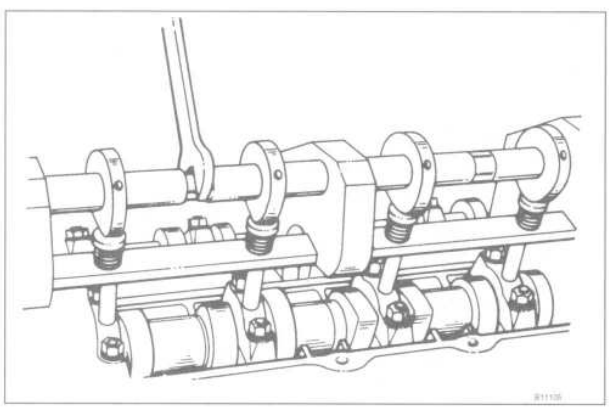

Fig. 27. Special tool (eccentric shaft) being turned to apply pressure to camshaft bearing caps.

4. Remove the bearing cap mounting nuts.

5. Slowly release the pressure on the camshaft bearing caps by turning the eccentric shaft. Remove the bearing caps and camshaft. Repeat the procedure on the remaining camshaft.

6. Remove the camshaft carriers by pulling them straight up, being careful not to let the hydraulic cam followers fall out.

CAUTION —

- *Do not let the hydraulic cam followers fall out as the camshaft carrier is removed. Special suction cups are available from BMW (special tool no. 11 3 250) to hold the hydraulic cam followers in place during carrier removal.*
- *The cam followers should be stored in an upright position.*

7. Remove the valves using a valve spring compressor. Label each valve assembly as it is removed. Remove and discard the valve stem oil seals from the valve guides.

NOTE —

A special valve spring compressor assembly is available from BMW for the M50 engine (BMW special tool no. 11 1 067, no. 11 1 068, no. 11 1 051 and 11 1 052).

Reassembly is the reverse of disassembly. Prior to installation, check all components for wear as described below under **Cylinder Head Reconditioning**. Be sure all parts are installed in their original positions. Lubricate the camshafts prior to installation. When installing the camshafts into the cylinder head, position them so that the lobes for cylinder no. 1 are pointing up and towards each other. See Fig. 28.

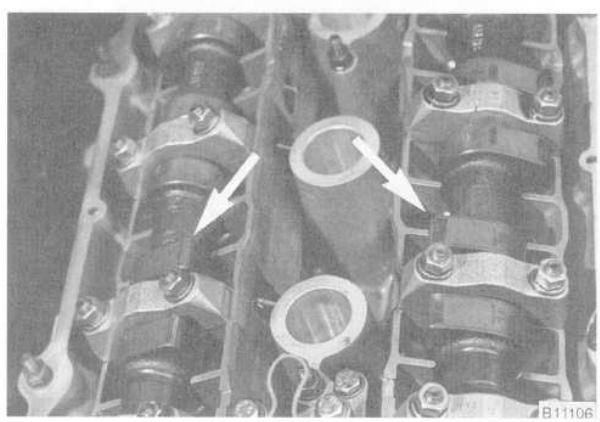

Fig. 28. Camshaft correctly positioned for reassembly so that cylinder no. 1 lobes face each other.

CAUTION —
A minimum waiting time must be observed before installing the cylinder head to the block. When the camshaft is removed, the hydraulic cam followers expand slightly. This expansion causes increased valve lift, resulting in open valves.

Cylinder head installation waiting times (after cylinder head reassembly)

- at or above 68°F (20°C) . . . . . 10 minutes
- 50-68°F (10-20°C) . . . . . 30 minutes
- 32-50°F (0-10°C) . . . . . 75 minutes

NOTE —

- *Be sure all parts are reinstalled in their original positions. The camshaft bearing caps are coded with a letter and a cylinder number. For example, "A1" is the exhaust camshaft cap for cylinder no. 1 and "E1" is the intake camshaft bearing cap for cylinder no. 1. Similarly, the camshafts and the camshaft carriers are stamped with a code letter—"E" for the intake side and "A" for the exhaust side.*
- *"E" is for Einlaß, (German for intake) and "A" is for Auspuff, (German for exhaust).*
- *Cylinder no. 1 is at the front of the engine.*

Tightening Torques

- Camshaft bearing caps to cylinder head . . . . . 15 Nm (11 ft-lb)
- Exhaust manifold to cylinder head . . . 20 Nm (15 ft-lb)
- Intake manifold to cylinder head . . . . 15 Nm (11 ft-lb)

To disassemble cylinder head (M60 engine)

Special BMW service tools are highly recommended for removing and installing the camshafts and disassembling the M60 cylinder head.

WARNING —
Removal of the camshafts without the special tools can result in personal injury and/or cylinder head damage. Be sure to read the procedure through before starting a job.

CAUTION —
The process of evenly loosening the camshaft bearing cap nuts is NOT an acceptable method of removing the camshafts. The special tools should always be used to remove the camshafts.

1. Remove the cylinder head as described in **113 Cylinder Head Removal and Installation**.
2. With the cylinder head mounted to an appropriate work stand, remove the exhaust camshaft sprocket mounting bolts.
3. Depress chain tensioner and lock in position using BMW special tool no. 11 3 420, or appropriate stiff wire. See Fig. 29.

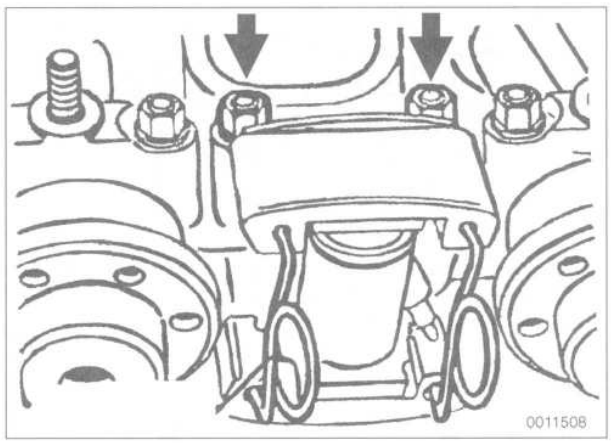

Fig. 29. Camshaft chain tensioner locked in position with BMW special tool no. 11 3 420. Tensioner mounting nuts shown at **arrows**.

4. Slide sprocket and chain assembly from camshafts.
5. Remove chain tensioner mounting nuts and remove tensioner.
6. Carefully turn camshafts so that cutouts in camshaft flanges are positioned as shown in Fig. 30 or Fig. 31.

NOTE —
A special jig (BMW special tool no. 11 2 430) is available to check the removal and installation positions of the camshafts.

7. Loosen bearing cap mounting nuts in stages (1/2 turn per stage), working from outside to inside until valve spring pressure is relieved.
8. Remove camshaft bearing caps. Remove camshafts.
9. Carefully remove hydraulic cam followers. Label each cam follower as it is removed.

CAUTION —

- *Use care not to damage the cam follower bores when removing the cam followers. Special suction cups are available from BMW (special tool no. 11 3 250) to remove the followers from the cylinder head.*
- *The removed cam followers should be stored in an upright position.*

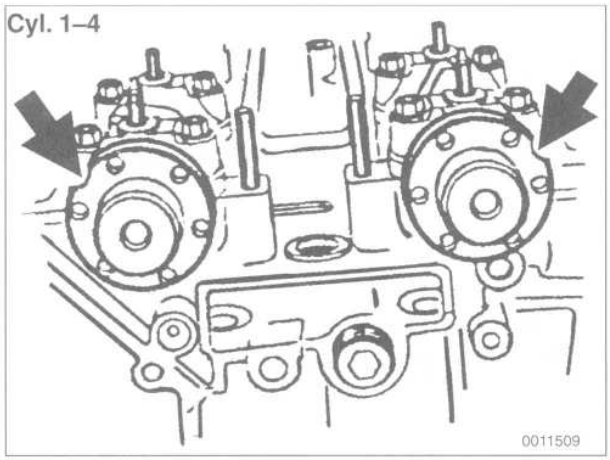

Fig. 30. Right Cylinder Head (passenger side): position camshafts with cutouts in flanges pointing **up** approximately 30 - 40° from horizontal plane.

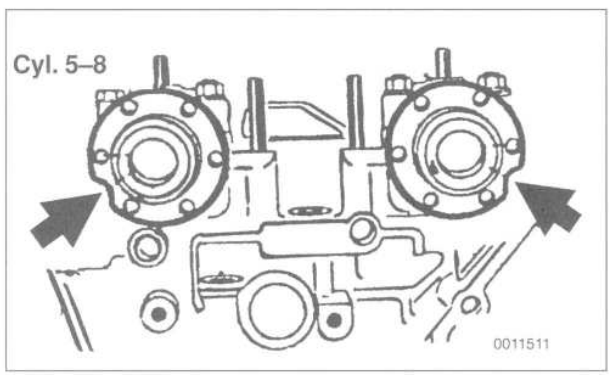

Fig. 31. Left Cylinder Head (driver's side): position camshafts with cutouts in flanges pointing **down** approximately 30 - 40° from horizontal plane.

10. Remove valves using valve spring compressor. Label each valve assembly as it is removed. Remove and discard valve stem oil seals from valve guides.

Reassembly is the reverse of disassembly. Be sure that the O-ring on the hydraulic chain tensioner is correctly positioned and in good condition. See Fig. 32.

Check all components for wear as described below under **Cylinder Head Reconditioning**. Be sure all parts are installed in their original positions. Lubricate the camshafts prior to installation. When installing the camshafts into the cylinder head, position them as shown in Fig. 30 or Fig. 31.

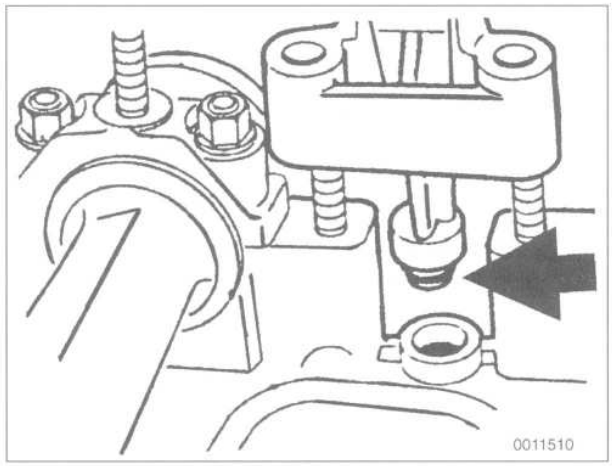

Fig. 32. Timing chain tensioner O-ring (**arrow**).

CAUTION —
A minimum waiting time must be observed before installing the cylinder head to the block. When the camshaft is removed, the hydraulic cam followers expand slightly. This expansion causes increased valve lift, resulting in open valves.

Cylinder head installation waiting times (after cylinder head reassembly)

- at or above 68°F (20°C) . . . . . 10 minutes
- 50-68°F (10-20°C) . . . . . 30 minutes
- 32-50°F (0-10°C) . . . . . 75 minutes

NOTE —

- *Be sure all parts are reinstalled in their original positions.*
- *Cylinder no. 1 is at the front right (passenger) side of the engine. The right cylinder head is for cylinders 1 though 4. The left cylinder head is for cylinders 5 through 8.*
- *Camshaft bearing caps are coded with a letter and a cylinder number. For example, "A1" is the exhaust camshaft cap for cylinder no. 1 and "E1" is the intake camshaft bearing cap for cylinder no. 1. See Fig. 33.*
- *Similarly, camshafts are marked with a code letter and cylinder number. For example, "E1-4" is the intake camshaft cylinders 1 through 4. See Fig. 34 and **Table c** for a listing of camshaft identification markings.*

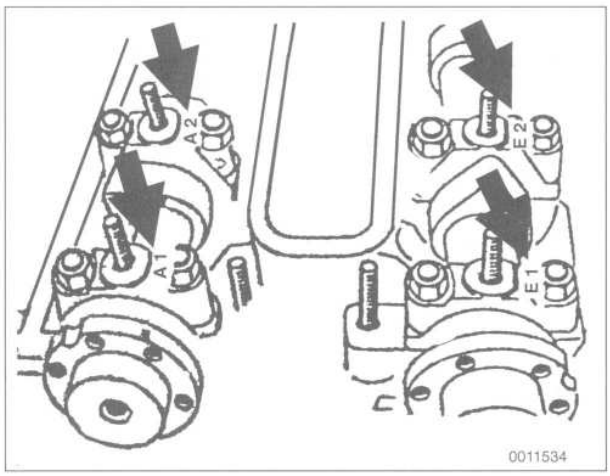

Fig. 33. Camshaft bearing cap identification markings (arrows). **E** identifies intake camshaft bearing caps. **A** identifies exhaust camshaft bearing caps. Right cylinder head shown.

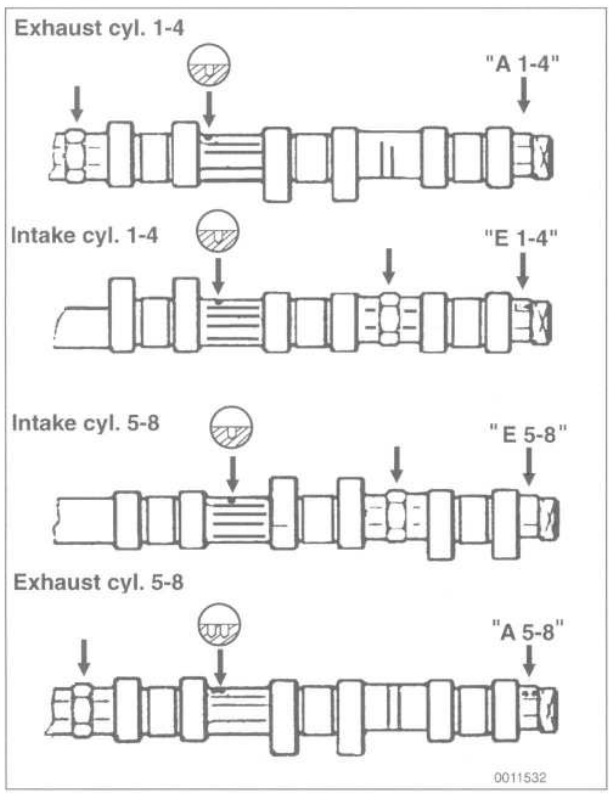

Fig. 34. Camshaft identification markings in M60 engine. Note that all markings face up with camshaft at TDC.

Table c. Camshaft Identification (M60 engine)

Identification/ markings	Right cylinder head (cylinders 1-4)	Left cylinder head (cylinders 5-8)
A (installed position)		
Intake	E1-4	E5-8
Exhaust	A1-4	A5-8
B (hexagon location)		
Intake	between cyl. 3 and 4	between cyl. 7 and 8
Exhaust	between cyl. 1 and 2	between cyl. 5 and 6
C (hole marking)		
Intake	one hole	one hole
Exhaust	one hole	two holes

Tightening Torques (M60 engine)

- Camshaft bearing caps to cylinder head . . . . . 15 Nm (11 ft-lb)
- Camshaft sprocket to camshaft . . . . . 15 Nm (11 ft-lb)
- Exhaust manifold to cylinder head . . . 22 Nm (17 ft-lb)
- Intake manifold to cylinder head. . . . . 15 Nm (11 ft-lb)

CYLINDER HEAD AND VALVETRAIN RECONDITIONING

This section provides the specifications and special reconditioning information necessary to repair the cylinder heads covered by this manual.

If machine shop services are not readily available, one alternative is to install a remanufactured cylinder head. Remanufactured cylinder heads are available from an authorized BMW dealer parts department.

Cylinder Head

The disassembled cylinder head should be inspected for warpage and cracks. Check the valve guides and valve seats for wear before machining a warped head. Always decarbonize and clean the head before inspecting it. A high-quality straight edge can be used to check for warpage. See Fig. 35.

Visually inspect the cylinder head for cracks. If a cracked cylinder head is suspected and no cracks are detected through the visual inspection, have the head further tested for cracks by an authorized BMW dealer. A cracked cylinder head should be replaced.

NOTE —

- *On M20, M30 and M60 engines, BMW does not give cylinder head warpage specifications. On M50 engines, the maximum allowable cylinder head warpage is 0.03 mm (0.0012 in.).*
- *When replacing the cylinder head on M50 engines, be sure to check the bearing surfaces on the camshaft carriers for warpage. If the warpage exceeds 0.05 mm (0.002 in.), the camshaft carrier should be replaced.*

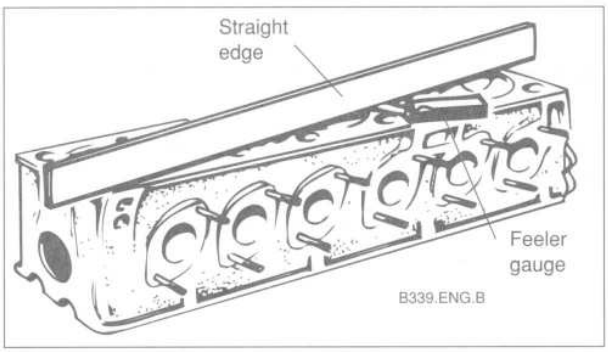

Fig. 35. Straight edge and feeler gauge used to check straightness of cylinder head gasket surface.

A warped cylinder head can be machined provided no more than 0.3 mm (0.012 in.) of material is removed. If further machining is required, the head should be replaced. Removing more than this amount will reduce the size of the combustion chamber and adversely affect engine performance. A 0.3 mm thicker gasket is available from an authorized BMW parts department for machined heads.

Before machining the head to correct for warpage, measure the total height of the cylinder head as shown in Fig. 36. Minimum resurfacing height specifications are given below. If the cylinder head height will not meet the minimum height dimension after machining, the cylinder head should be replaced.

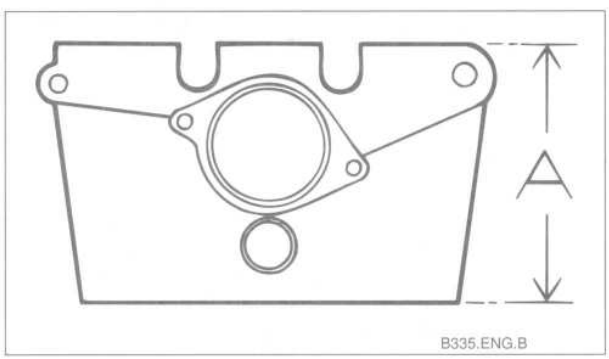

Fig. 36. Front view of cylinder head showing minimum resurfacing dimension (**A**).

NOTE —

When machining cylinder heads on M30 and M60 engines, the upper camshaft timing chain cover and the rear cover (M30 only) should be bolted to the cylinder head before machining.

Table d. Cylinder Head Height

Engine	New	Minimum permissible height (dimension A)
M20	125.1 ± 0.1 mm (4.925 ± 0.004 in.)	124.7 mm (4.909 in.)
M30	129.0 ± 0.1 mm (5.079 ± 0.004 in.)	128.6 mm (5.063 in.)
M50	140.0 ± 0.05 mm (5.512 ± 0.002 in.)	139.7 ± 0.05 mm (5.500 ± 0.002 in.)
M60	140.0 ± 0.05 mm (5.512 ± 0.002 in.)	139.7 ± 0.05 mm (5.500 ± 0.002 in.)

Camshaft

Camshaft wear is usually caused by insufficient lubrication. On M30 engines, the installation of the oil sprayer bar is critical. A clogged sprayer bar or a loose sprayer bar mounting bolt will reduce oil flow to the camshaft. Visually inspect the removed camshaft lobes and journals for wear. Camshaft wear specifications are given in **Table e**.

NOTE —

For camshaft replacement procedures, see **Cylinder Head Disassembly and Assembly**.

Table e. Camshaft Specifications

Axial play	
M20 engine (max.)	0.20 mm (0.008 in.)
M30 engine	0.03 to 0.18 mm (0.0012 to 0.0071 in.)
M50 engine	0.15-0.33 mm (0.006-0.013 in.)
M60 engine	0.10-0.28 mm (0.004-0.011 in.)
Radial play (Plastigage)	
M20 engine (max.)	N/A
M30 engine	N/A
M50 engine	0.020-0.054 mm (0.0008-0.0021 in.)
M60 engine	0.040-0.074 mm (0.0016-0.0029 in.)
Camshaft lobe height	
1991-1992 M50 engine	
intake	47.7 + 0.06 mm (1.8779 ± 0.0024 in.)
exhaust	46.8 ± 0.06 mm (1.8425 ± 0.0024 in.)
1993– M50TU engine	
intake and exhaust	47.0 ± 0.06 mm (1.8503 ± 0.0024 in.)
1994– M60 engine	
intake	47.7 ± 0.06 mm (1.8780 ± 0.0024 in.)
exhaust	47.4 ± 0.06 mm (1.8661 ± 0.0024 in.)

NOTE —

- *If the camshaft is being replaced due to cam lobe wear, the corresponding rocker arms or cam followers should also be replaced to avoid damaging the new camshaft.*
- *On M30 engines experiencing camshaft wear, a special hardened camshaft may be available from BMW. Check with an authorized BMW dealer parts department for the latest parts information regarding BMW Service-Information Bulletin 11 07 88 (1767).*

Hydraulic Cam Followers (M50/M60 engines)

The M50 and M60 engines use self-adjusting hydraulic cam followers to keep the valve clearances within a limited working range. The cam followers are sealed units and require no maintenance or adjustment. Be sure to inspect the cam follower bores for wear or scoring.

Under some circumstances, such as a cold start, the cam followers may become noisy. Hydraulic cam follower noise is usually a high-pitched tapping or chattering noise. In most instances, this is considered normal as long as the noise goes away in a few minutes (maximum 20 minutes). If the noise does not go away, either the follower is faulty or the oil pressure to the follower is low. Hydraulic cam follower replacement requires that the camshaft first be removed.

To check hydraulic cam followers

1. Run the engine until it reaches normal operating temperature.
2. Turn the engine off and remove the top engine covers, the ignition coils, and the cylinder head covers.
3. Using a plastic or wooden stick, press down on the top of the follower. See Fig. 37. If there is any noticeable clearance, the lifter is faulty and should be replaced.

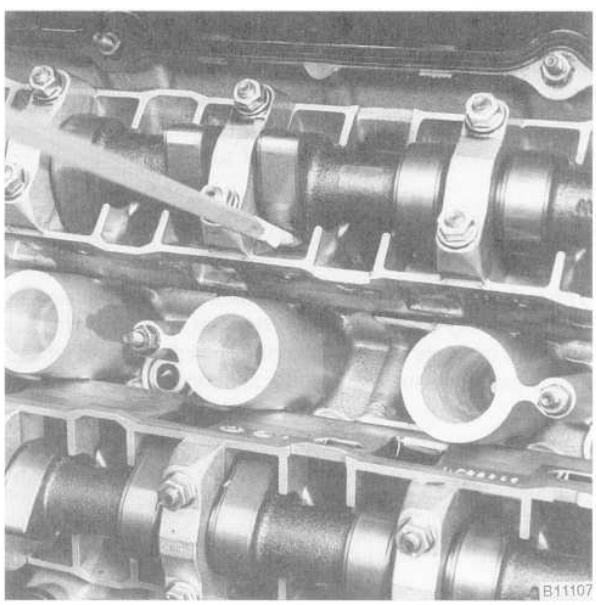

Fig. 37. Hydraulic cam follower being checked. Note that cam lobe is pointing up. (M50 engine shown.)

NOTE —

When checking the lifter, makes sure the camshaft lobe is facing up so that there is no valve spring pressure on the cam follower.

4. If a cam follower is faulty, remove the camshaft and withdraw the follower as described under **Cylinder Head Disassembly and Assembly.**
5. Cylinder head assembly is the reverse of disassembly.

Tightening Torque

- Cylinder head cover to cylinder head/ timing chain cover
  - M6 . . . . . 10 Nm (89 in-lb)
  - M7 . . . . . 15 Nm (11 ft-lb)

Rocker Arms and Rocker Arm Shafts (M20 and M30 engines)

Rocker arms and rocker arm shafts are components that wear and are usually the cause of valve train noise. Although valve train noise may indicate worn rocker arms or rocker arm shafts, valve train noise may also be caused by incorrect valve clearances or other engine wear. Valve clearance adjustment is described above under **Valve Adjustment (M20 and M30 engines only)**.

First check the rocker arm bushings for wear. If the lower part of the bushing is shiny and rough, the rocker arm is worn. A good rocker arm bushing surface will have a dull, smooth finish all around. Continue checking the rocker arms by installing them on a known good rocker arm shaft. There should be no noticeable play in any direction. See Fig. 38. The exhaust-side rocker arms are the most susceptible to wear. If the rocker arm or shafts show any visible signs of wear, these parts should be replaced.

CAUTION —

Some 535i models produced between September 1992 and April 1993 may have faulty rocker arms installed. On vehicles so equipped, the rocker arm bushings can slide out of the rocker arms, causing the valves to jam at the rocker arm eccentrics and result in engine damage. Contact an authorized BMW dealer for vehicle chassis ranges and additional information on this service action.

Rocker Arm Specifications

- Radial play . . 0.016 to 0.052 mm (0.0006 to 0.002 in.)



Fig. 38. Rocker arm being checked for wear on rocker arm shaft.

Valve Guides

BMW does not supply valve guides as replacement parts. If a valve guide is excessively worn, the valve guides should be reamed to accept oversized valve stems. Valve guide specifications are listed in **Table f**.

Valve guides can be checked for wear using a new valve as shown in Fig. 39. Be sure to inspect the valve seats to ensure that the cylinder head can be reconditioned before reworking the valve guides.

NOTE —

- *International Organization for Standardization (ISO) tolerance classes are listed in Table f. ISO allowances are based on nominal sizes and should be used to determine proper fits. Most machine shops should have this information readily available.*
- *BMW supplies oversize valves. See* **Valves** *for additional information.*
- *Replacement valve guides may be available through aftermarket suppliers. Valve guide replacement requires special tools and a press. It is also necessary to heat the cylinder head and chill the valve guides when replacing the guides.*

Valves

Valve specifications are listed below in **Table g**. Remove carbon deposits from the valves using a wire brush or wire wheel.

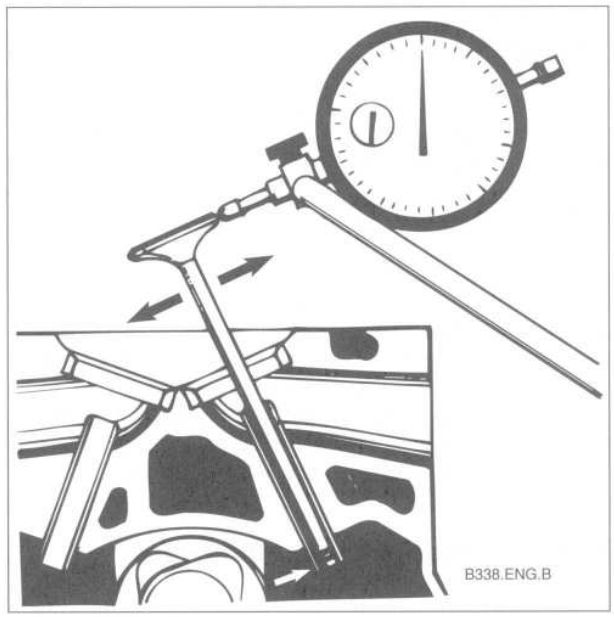

Fig. 39. Valve guide wear being checked with dial indicator. Insert new valve until stem end is flush with end of guide (**white arrow**). See **Table f** for wear limits.

Testing Valves for Leakage

To test the valves for leakage, the camshaft and rocker arm assemblies (where applicable) should first be removed. Install the valve assemblies and the spark plugs in each cylinder. Place the cylinder head on a workbench with the combustion chamber facing upward. Fill each combustion chamber with a thin non-flammable liquid, such as a parts cleaning fluid. After fifteen minutes, check the level of the fluid. If the fluid level in any cylinder drops, that cylinder is not sealing properly.

Valve Stem Oil Seals

The purpose of the valve stem oil seal is to prevent excess oil from entering the combustion chamber. The sign of faulty valve stem oil seals is excessive oil consumption and smoke from the exhaust immediately after starting and during deceleration

NOTE —

Valve stem oil seals should not be reused. If the valves are removed, new valve stem oil seals should be installed.

Valve stem oil seal replacement requires that the cylinder head be fully disassembled as described above under **Cylinder Head Disassembly and Assembly**.

Table f. Valve Guide Specifications

Specifications	M20 Engine	M30 Engine	M50 Engine (1991-1992)	M50TU Engine (1993–on)	M60 Engine
Valve guide wear, maximum (valve tilt clearance measured with new valve)	0.8 mm (0.031 in.)	0.8 mm (0.031 in.)	0.5 mm (0.020 in.)	0.5 mm (0.020 in.)	0.5 mm (0.020 in.)
Valve guide inside diameter, installed (tolerance per ISO allowance H7)					
standard	7.0 mm (0.275 in.)	8.0 mm (0.315 in.)	7.0 mm (0.275 in.)	6.0 mm (0.236 in.)	6.0 mm (0.236 in.)
oversize 1	7.1 mm (0.280 in.)	8.1 mm (0.319 in.)	7.1 mm (0.280 in.)	6.1 mm (0.240 in.)	6.1 mm (0.240 in.)
oversize 2	7.2 mm (0.283 in.)	8.2 mm (0.323 in.)	7.2 mm (0.283 in.)	6.2 mm (0.244 in.)	6.2 mm (0.244 in.)

Table g. Valve Specifications

Specification	M20 Engine	M30 Engine	M50 Engine (1991-1992)	M50TU Engine (1993-later)	M60 (3.0 liter)	M60 (4.0 liter)
Valve head dia.						
intake	42 mm (1.635 in.)	47 mm (1.850 in.)	33.0 mm (1.299 in.)	33.0 mm (1.299 in.)	32.0 mm (1.260 in.)	35.0 mm (1.378 in.)
exhaust	36 mm (1.417 in.)	38 mm (1.496 in.)	30.5 mm (1.201 in.)	30.5 mm (1.201 in.)	28.5 mm (1.122 in.)	30.5 mm (1.201 in.)
Minimum valve head thickness						
intake	1.3 mm (0.051 in.)	1.3 mm (0.051 in.)	N/A	N/A	N/A	N/A
exhaust	2.0 mm (0.079 in.)	2.0 mm (0.079 in.)	N/A	N/A	N/A	N/A
Valve face angle	45°	45°	45°	45°	45°	45°
Valve stem dia. standard						
intake	7.0 mm (0.280 in.)	8.0 mm (0.315 in.)	6.975 mm (0.275 in.)	5.975 –0.015 mm (0.235 –0.0006 in.)	5.975 –0.015 mm (0.235 –0.0006 in.)	5.975 –0.015 mm (0.235 –0.0006 in.)
exhaust	7.0 mm (0.280 in.)	8.0 mm (0.315 in.)	6.975 mm (0.275 in.)	5.960 –0.015 mm (0.2346 –0.0006 in.)	5.960 –0.015 mm (0.2346 –0.0006 in.)	5.960 –0.015 mm (0.2346 –0.0006 in.)
Oversize 1						
intake	7.1 mm (0.280 in.)	8.1 mm (0.319 in.)	7.1 mm (0.280 in.)	6.075–0.015 mm (0.239–0.0006 in.)	6.075–0.015 mm (0.239–0.0006 in.)	6.075–0.015 mm (0.239–0.0006 in.)
exhaust	7.1 mm (0.280 in.)	8.1 mm (0.319 in.)	7.1 mm (0.280 in.)	6.060–0.015 mm (0.239–0.0006 in.)	6.060–0.015 mm (0.239–0.0006 in.)	6.060–0.015 mm (0.239–0.0006 in.)
Oversize 2						
intake	7.2 mm (0.283 in.)	8.2 mm (0.323 in.)	7.2 mm (0.283 in.)	6.175–0.015 mm (0.243–0.0006 in.)	6.175–0.015 mm (0.243–0.0006 in.)	6.175–0.015 mm (0.243–0.0006 in.)
exhaust	7.2 mm (0.283 in.)	8.2 mm (0.323 in.)	7.2 mm (0.283 in.)	6.160–0.015 mm (0.243–0.0006 in.)	6.160–0.015 mm (0.243–0.0006 in.)	6.160–0.015 mm (0.243–0.0006 in.)

NOTE —

BMW special tool no. 11 1 250 (M20, M30, M50 engines) or special tool no. 11 2 090 (M50TU VANOS) is available to remove the valve stem oil seals. As an alternative, standard valve seal removal tools are available from most automotive parts stores. See Fig. 40.

When installing the valve stem oil seals, the use of BMW special tool 11 1 200 is recommended. Lubricate the new seals and install them using hand pressure only. Be sure to install the valve spring seat before installing the seal.

Valve Seats

The valve seats should be resurfaced whenever new valves or valve guides are installed. Cutters are required to resurface the seats. Always check the valves for leaks after reconditioning a valve seat as described above.

NOTE —

Standard size replacement valve seats are not available from BMW. Replacement valve seats are only available from BMW in 0.4 mm oversize (oversized in both height and diameter).

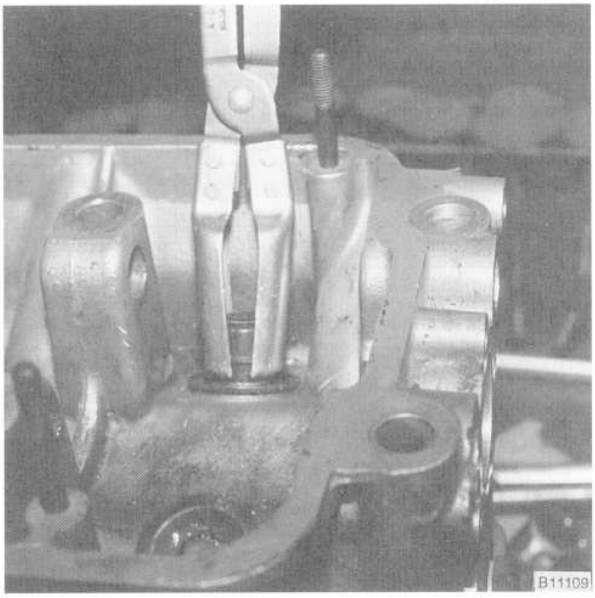

Fig. 40. Valve stem oil seal being removed from valve guide using special removal tool.

NOTE —

- *On M50 engines, BMW recommends that valves with thicker heads be installed if the valve seats are machined more than 0.20 mm (0.008 in.). If thicker valves are not installed, engine compression will be adversely affected.*
- *To determine the amount of material machined from the seat, first insert a new valve into the valve guide and measure the amount of valve stem extending beyond the top of the valve guide. See Fig. 41. Repeat this measurement after cutting the seats. If the difference in the measurements exceeds 0.20 mm (0.008 in.), valves with thicker heads should be installed. Thicker valves are available from BMW in two sizes: 0.20 mm and 0.40 mm.*

Replacing the valve seats requires heating the cylinder head and chilling the valve seats to a specific temperature as listed in **Table i**. When installing new valve seats, they should be installed flush to the cylinder head surface.

NOTE —

International Organization for Standardization (ISO) tolerance classes are given in Table i for machine shop reference. ISO allowances are based on nominal shaft and bore tolerances and should be used to determine proper fits. Most qualified machine shops should have this information available.

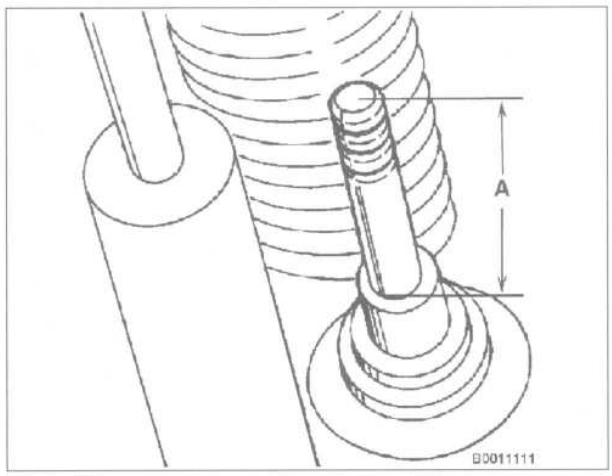

Fig. 41. Before cutting valve seats on M50 engines, measure valve stem protrusion (**A**), then cut seats and make measurement again. Install valves with thicker heads if difference exceeds 0.20 mm (0.008 in.).

Table h lists valve seat dimensions. **Table i** lists valve seat replacement specifications, including correct installation temperatures.

Valve Springs

Valve springs should be checked for squareness and fatigue. To quickly check the springs, line them up in a row. Place a straight edge across the top of the springs. Any spring that is significantly shorter than the others is significantly worn and should be replaced. Use a high quality square to check spring out of squareness. Any spring that is out of square should be replaced.

NOTE —

Valve spring specifications and wear limits are not available from BMW.

Table h. Valve Seat Dimensions

M20, M30 Engine

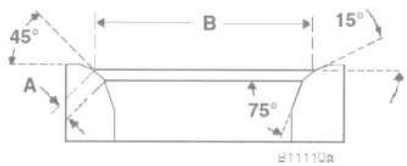

1991-1992 M50 Engine

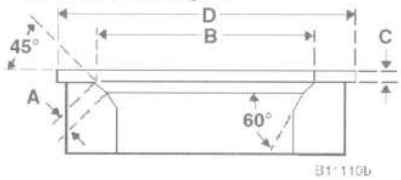

1993— M50/M60 Engines

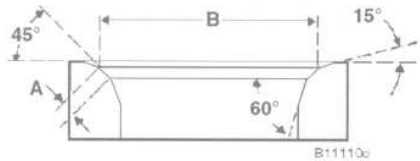

Specification	M20 Engine	M30 Engine	M50 Engine (1991-1992)	M50TU Engine (1993–on)	M60 Engine (3.0 liter)	M60 engine (4.0 liter)
Valve seat angle	45°	45°	45°	45°	45°	45°
Correction angle, outside	15°	15°	N/A	15°	15°	15°
Correction angle, inside	75°	75°	60°	60°	60°	60°
Correction depth (C)	N/A	N/A	0.04 mm (0.016 in.), max.	N/A	N/A	N/A
Correction cutter dia. (D)						
intake	N/A	N/A	35.0 mm (1.378 in.)	N/A	N/A	N/A
exhaust	N/A	N/A	32.5 mm (1.280 in.)	N/A	N/A	N/A
Valve seat width (A)						
intake	1.65 ± 0.35 mm (0.065 ± 0.014 in.)	1.4 ± 0.4 mm (0.055 ± 0.016 in.)	1.4–1.9 mm (0.055–0.075 in.)	1.65 ± 0.25 mm (0.065 ± 0.010 in.)	1.25 ± 0.25 mm (0.065 ± 0.010 in.)	1.25 ± 0.25 mm (0.065 ± 0.010 in.)
exhaust	1.65 ± 0.35 mm (0.065 ± 0.014 in.)	1.7 ± 0.4 mm (0.067 ± 0.016 in.)	1.4–1.9 mm (0.055–0.075 in.)	1.65 ± 0.25 mm (0.065 ± 0.010 in.)	1.65 ± 0.25 mm (0.065 ± 0.010 in.)	1.65 ± 0.25 mm (0.065 ± 0.010 in.)
Valve seat outside dia. (B)						
intake	40.6 mm (1.598 in.)	45.6 mm (1.795 in.)	31.6 mm (1.244 in.)	32.4 ± 0.20 mm (1.276 ± 0.008 in.)	31.5 mm (1.240 in.)	34.5 mm (1.358 in.)
exhaust	34.6 mm (1.362 in.)	36.6 mm (1.441 in.)	29.1 mm (1.146 in.)	29.4 ± 0.20 mm (1.157 ± 0.008 in.)	28.0 mm (1.102 in.)	30.0 mm (1.181 in.)

Table i. Valve Seat Replacement Specifications

Specification	M20 Engine	M30 Engine	M50 Engine (1991-1992)	M50TU Engine (1993–on)	M60 Engine (3.0 liter)	M60 Engine (4.0 liter)
Valve seat insert outside diameter tolerance per ISO allowance:			**g6 for M20/M30 Engines k6 for M50/M60 Engines**			
intake						
standard	43.15 mm (1.688 in.)	48.15 mm (1.8957 in.)	34.1 mm (1.343 in.)	34.1 mm (1.343 in.)	—	—
+ 0.4 mm	43.55 mm (1.7146 in.)	48.55 mm (1.9114 in.)	34.5 mm (1.358 in.)	34.5 mm (1.358 in.)	33.5 mm (1.319 in.)	36.5 mm (1.437 in.)
exhaust						
standard	37.65 mm (1.4823 in.)	40.15 mm (1.5807 in.)	31.6 mm (1.244 in.)	31.6 mm (1.244 in.)	—	—
+ 0.4 mm	38.05 mm (1.4980 in.)	40.55 mm (1.5965 in.)	32.0 mm (1.1260 in.)	32.0 mm (1.1260in.)	30.0 mm (1.181 in.)	32.0 mm (1.260 in.)
Valve seat bore diameter (tolerance per ISO allowance H7)						
intake						
standard	43.00 mm (1.6929 in.)	48.00 mm (1.8898 in.)	34.0 mm (1.339 in.)	34.0 mm (1.339 in.)	—	—
+ 0.4 mm	43.40 mm (1.7086 in.)	48.40 mm (1.9055 in.)	34.4 mm (1.354 in.)	34.4 mm (1.354 in.)	33.4 mm (1.315 in.)	36.4 mm (1.433 in.)
exhaust						
standard	37.50 mm (1.4764 in.)	40.00 mm (1.5748 in.)	31.5 mm (1.240 in.)	31.5 mm (1.240 in.)	—	—
+ 0.4 mm	37.90 mm (1.4921 in.)	40.40 mm (1.5905 in.)	31.9 mm (1.256 in.)	31.9 mm (1.256 in.)	29.9 mm (1.177 in.)	31.9 mm (1.256 in.)
Valve seat insert height (tolerance per ISO allowance H11)						
intake and exhaust						
standard	7.3 mm (0.287 in.)	7.5 +0.1 mm (0.295 +0.004 in.)	7.3 –0.1 mm (0.287 –0.0004)	7.3 –0.1 mm (0.287 –0.0004)	—	—
+ 0.4 mm	7.7 mm (0.303 in.)	7.9 +0.1 mm (0.311 + 0.004 in.)	7.7 –0.1 mm (0.303 –0.004 in.)	7.7 –0.1 mm (0.303 –0.004 in.)	7.7 –0.1 mm (0.303 –0.004 in.)	7.7 –0.1 mm (0.303 –0.004 in.)
Valve seat installation temperatures						
cylinder head	+50°C (+120°F)	+50°C (+120°F)	+50°C (+120°F)	+50°C (+120°F)	+20°C (+68°F)	+20°C (+68°F)
valve seat insert	–150°C (–240°F)	–150°C (–240°F)	–150°C (–240°F)	–150°C (–240°F)	–150°C (–240°F)	–150°C (–240°F)

117 Camshaft Timing Chain

GENERAL 117-1

CAMSHAFT TIMING CHAIN 117-1
To remove camshaft timing chains (M50/M50TU engines) 117-1
To install camshaft timing chains (M50/M50TU engines) 117-7
To remove camshaft timing chain (M30 engine) 117-10
To install camshaft timing chain (M30 engine) 117-12
To check and adjust camshaft timing (M60 engine) 117-14

VANOS (VARIABLE VALVE TIMING) 117-16
To test VANOS operation 117-17
To remove VANOS control unit. 117-18
To install VANOS control unit 117-18

GENERAL

This repair group covers timing chain repair information for the M30, M50 and M60 engines.

Also covered in this repair group is the variable camshaft timing system (VANOS) used on the M50TU engine.

> ***NOTE —***
> *1989 and 1990 525i models equipped with the M20 engine use a camshaft drive belt. See* **118 Camshaft Timing Belt**.

The M30 engine uses a single-row chain to drive the single overhead camshaft. The chain is tensioned by a hydraulic chain tensioner supplied with engine oil.

M50 engines use a set of chains to drive the overhead camshafts. A primary chain is driven off the crankshaft and drives the primary sprocket on the exhaust camshaft. The secondary timing chain drives the intake camshaft. Each chain is tensioned by a hydraulic chain tensioner. See Fig. 1.

M60 engines use a double-row chain to drive the two intake camshaft sprockets on each cylinder bank. The exhaust camshaft sprockets are driven by a second set of double-row chains off the intake camshaft sprockets. The chains are tensioned by three hydraulic chain tensioners, one for each chain.

CAMSHAFT TIMING CHAIN

The timing chains are lubricated by engine oil and do not require maintenance. A worn timing chain and sprockets can lead to noisy operation and erratic valve timing. A faulty timing chain tensioner can also cause a noisy timing chain.

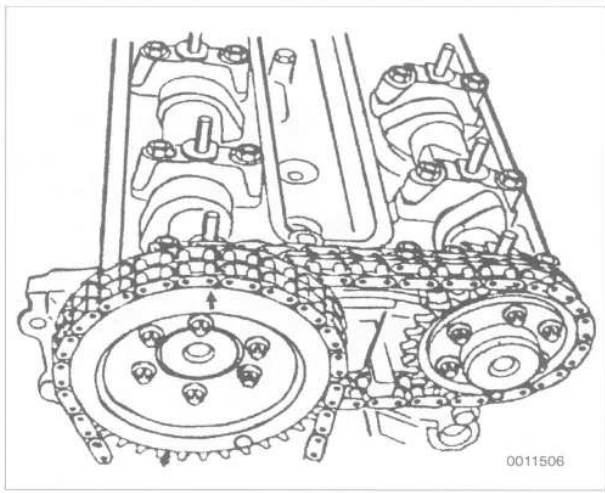

Fig. 1. Cutaway view of camshaft timing chain on M50TU engine. M50 and M60 engines are similar.

To remove camshaft timing chains (M50/M50TU engines)

Special BMW service tools are needed for this procedure. The special tools assure proper timing of the valvetrain, as there are no precise timing marks to set the timing on the camshafts. Read the procedure through before beginning the job.

> ***CAUTION —***
> *If the camshafts are not properly timed, the pistons can contact the valves.*

1. Disconnect the negative (–) battery cable.

> ***CAUTION —***
> *Disconnecting the battery cables may erase fault codes stored in control unit memory.*

2. With the engine cold, drain the engine coolant. Drain the engine block by removing the block drain. See **170 Radiator and Cooling System**.

> ***WARNING —***
> *Allow the cooling system to cool before opening or draining the system.*

3. Remove the alternator cooling air duct.

4. Remove the radiator cooling fan, fan shroud, and radiator. See **170 Radiator and Cooling System**.

> ***NOTE —***
> *The radiator cooling fan nut (32 mm wrench) has left-hand threads.*

5. Remove the two large coolant hoses from the thermostat housing. Remove the engine lifting bracket and the thermostat housing. See Fig. 2.



Fig. 2. Engine lifting bracket and thermostat housing mounting bolts (**arrows**).

6. Remove engine drive belts. See **020 Maintenance Program**.

7. Disconnect the crankcase ventilation hose fitting from the cylinder head cover. See Fig. 3.

8. Remove the top plastic engine covers. See Fig. 4. Disconnect the ignition coil harness connectors from the coils. Remove the ignition coils.



Fig. 3. Crankcase ventilation hose fitting (**arrow**).



Fig. 4. Remove top engine cover by prying out plugs and removing nuts (**A**). Note rubber insulators during cover removal (**arrows**).

9. Remove the cylinder head cover mounting bolts and remove the cylinder head cover. Unclip and remove the baffle cover from above the intake camshaft. See Fig. 5.

> ***NOTE —***
> *Make note of the arrangement of the rubber insulators when removing the cylinder head cover mounting bolts.*



Fig. 5. Oil baffle cover being removed.

10. Disconnect the coolant hose from behind the oil filter housing. See Fig. 6.



Fig. 6. Coolant hose at oil filter housing (**arrow**).

11. Remove the drive belt tensioner roller (upper). See Fig. 7. Then remove the tensioner mounting bolts and remove the tensioner assembly.

> ***CAUTION —***
> *Store the removed drive tensioner in an upright "installed" position. The tensioner is filled with oil and may leak if stored incorrectly.*

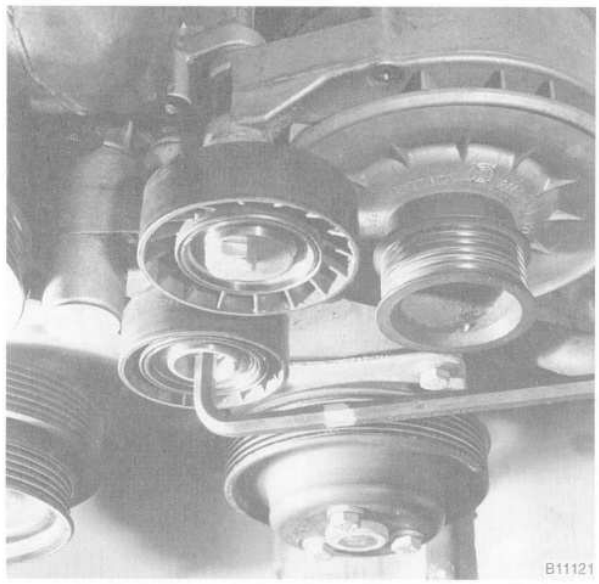

Fig. 7. Drive tensioner roller bolt being removed.

12. Remove the coolant pump pulley.

13. Remove the reference/speed sensor from its mounting on the front timing chain cover and set it aside.

14. Set the engine to approximate TDC by rotating the engine in the normal operating direction until the camshaft lobes at cylinder no. 1 are facing each other. See Fig. 8.

NOTE —
It may be easier to turn the engine over by first removing the spark plugs.

15. Set the engine to TDC by aligning the "0/T" mark (0°TDC) on the front vibration damper with the cast boss on the lower timing chain cover. See Fig. 9.

16. Remove the vibration damper mounting bolts and remove the vibration damper and pulley. See Fig. 10.

17. Secure the crankshaft hub to prevent the crankshaft from turning. Using a 22 mm socket, loosen but do not remove the crankshaft hub bolt.

NOTE —
The crankshaft hub center bolt is tightened to a torque of 410 Nm (300 ft-lb). A heavy duty holding device, such as BMW special tool no. 11 2 150, should be used to hold the crankshaft hub stationary while the nut is loosened. Use a heavy duty 3/4-inch drive socket and breaker bar to break the nut free.

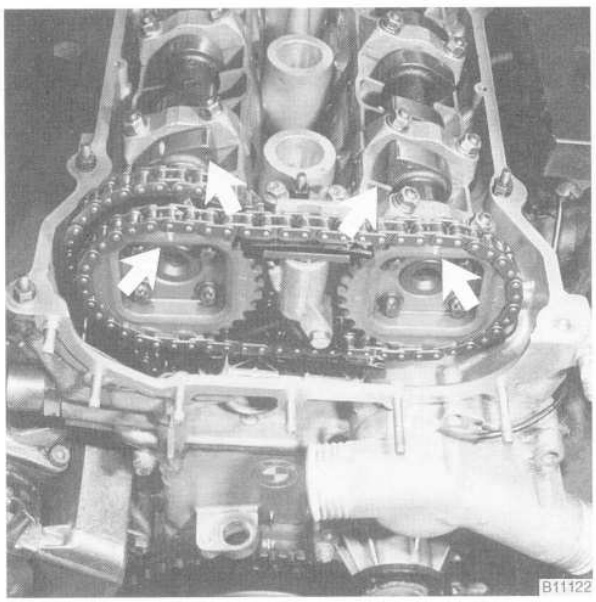

Fig. 8. Engine set to approximate TDC—camshaft lobes face in and sprocket arrows point up (**arrows**).



Fig. 9. 0/T (0°TDC) mark on vibration damper aligned with boss on timing chain cover (**arrow**).

18. Lock the crankshaft in the TDC position by inserting BMW special tool no. 11 2 300 through the transmission bellhousing and into the hole in the flywheel or drive plate. See Fig. 11.

NOTE —

Confirm that the locking tool has been correctly installed by trying to rotate the crankshaft.

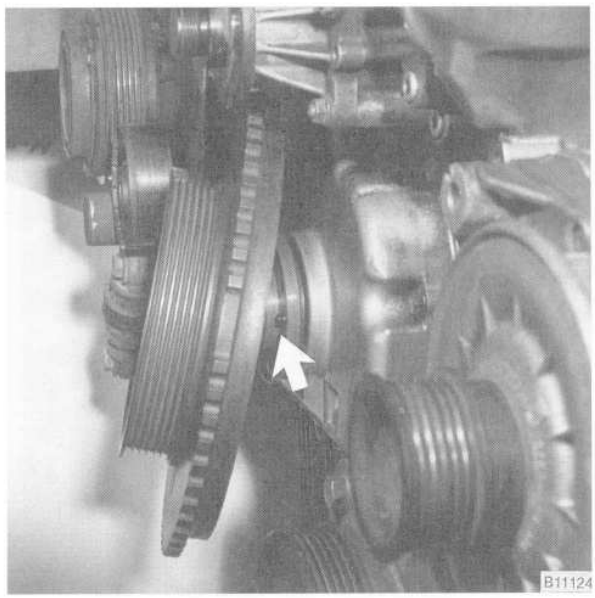

Fig. 10. Vibration damper with drive belt pulley being removed. Note hub locating dowel (**arrow**).

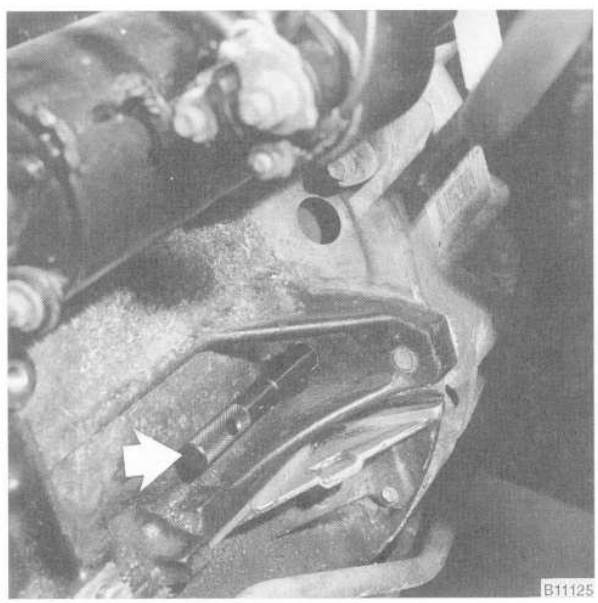

Fig. 11. BMW special tool no. 11 2 300 installed through bellhousing and into flywheel.

19. Remove the crankshaft hub bolt and washer and remove the hub from the crankshaft.

20. Remove the three cylinder head cover mounting studs from across the rear of the head. Lock the camshafts at TDC by mounting BMW special tool no. 11 3 240 over the square ends of the camshafts. Check that the tool is squarely seated on the cylinder head gasket surface. If necessary, rotate the camshafts slightly using a 24 mm wrench.

CAUTION —
The camshafts must be locked in the TDC position using the special service tool, or equivalent, before removing the timing chain. The arrows on the cam sprockets should not be used to set the engine to TDC. The tool holds the camshafts parallel to each other and perpendicular to the valve cover gasket surface.

21. Drain the engine oil and remove the oil pan. See **119 Lubrication System**.

22. Remove the three bolts holding the lower timing chain cover to the cylinder head (use Torx E8 socket). See Fig. 12.

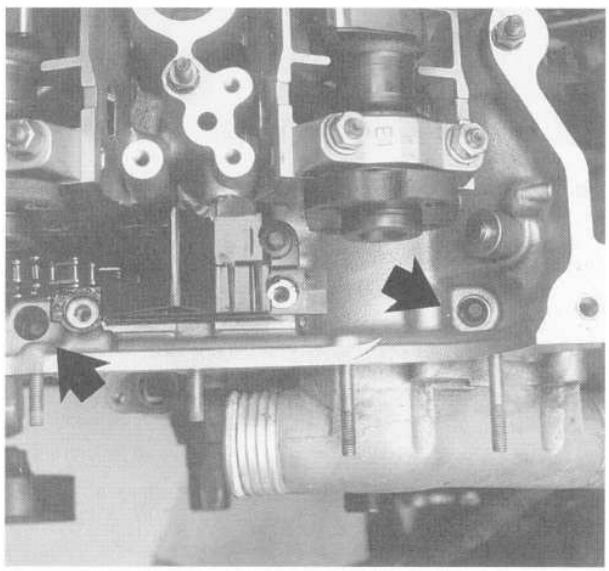

Fig. 12. Cylinder head-to-timing chain cover mounting bolts (**arrows**).

23. Using a drift, drive out the two locating dowels in left and right sides of the lower timing chain cover. Remove the cover mounting bolts and carefully lift the cover off. See Fig. 13.

CAUTION —
Use care when removing the cover from the cylinder head gasket. If the cover is stuck, use a sharp knife to separate it from the head gasket.

NOTE —
The timing chain cover can be removed with the coolant pump installed.

24. On 1993 and later cars, disconnect the harness connector from the VANOS solenoid at the front of the cylinder head. Remove the oil line fitting at the bottom of the VANOS control unit. See Fig. 14.

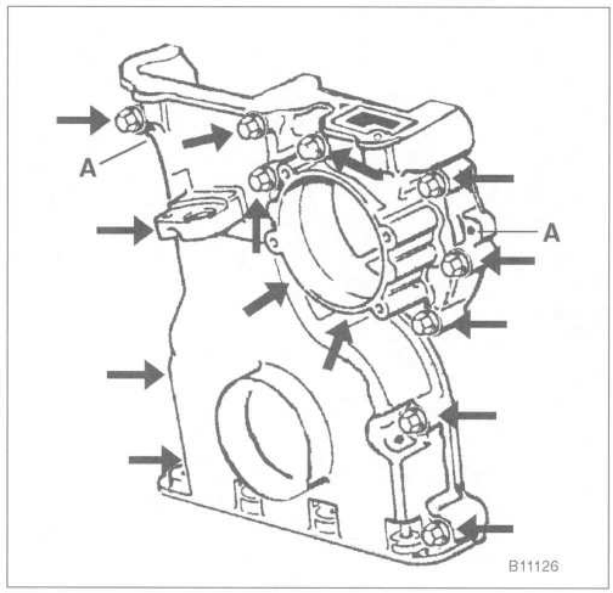

Fig. 13. Lower timing chain cover mounting bolts (**arrows**) and locating dowels (**A**).

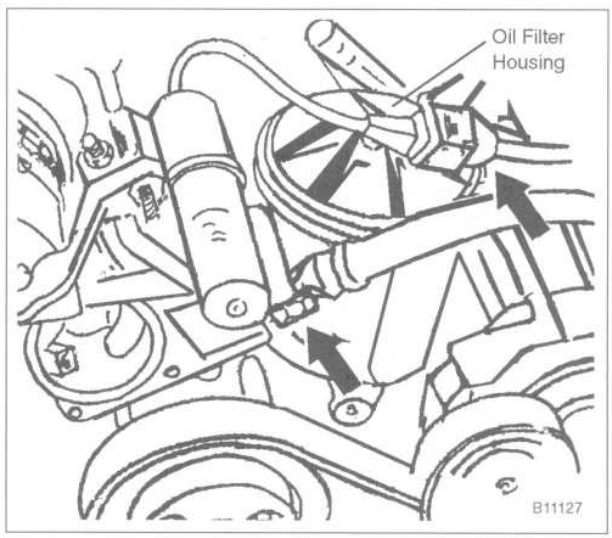

Fig. 14. VANOS solenoid connector and oil supply line banjo bolt (**arrows**).

NOTE —
Wrap the VANOS oil line fitting with a shop rag to absorb any spilled oil.

25. On 1991 and 1992 cars, remove the upper timing chain cover from the front of the cylinder head. See Fig. 15.

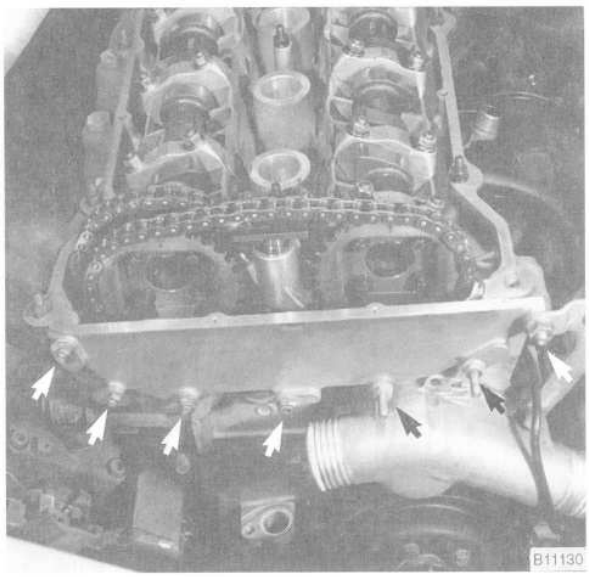

Fig. 15. Upper timing chain cover mounting nuts (**arrows**) on 1991 and 1992 cars.

26. On 1993 and later cars, remove the two access plugs from the VANOS control unit, just in front of the exhaust camshaft sprocket. Remove the exhaust camshaft sprocket mounting bolts (use Torx E10 socket).

NOTE —
Hold the camshaft stationary (at hex on camshaft) when loosening or tightening the camshaft sprocket mounting bolts.

27. Depress the secondary timing chain tensioner and lock it in the down position by inserting BMW special tool no. 11 3 290. Alternatively, a stiff piece of wire can be used. See Fig. 16.

28. On 1991 and 1992 cars, remove intake and exhaust camshaft sprocket mounting bolts using a Torx E10 socket.

29. On 1993 and later cars (VANOS), remove the six mounting nuts from the VANOS control unit and pull the control unit from the cylinder head. Remove the intake camshaft sprocket mounting nuts.

30. Remove both secondary sprockets together with the timing chain from the front of the camshafts. On cars with VANOS, also remove the thrust washer from the intake sprocket. 1991 and 1992 cars (non-VANOS), remove the cylinder identification trigger plate from the front of the intake camshaft.

CAUTION —
The crankshaft must not be allowed to rotate once the timing chain is removed. The pistons can contact the valves.

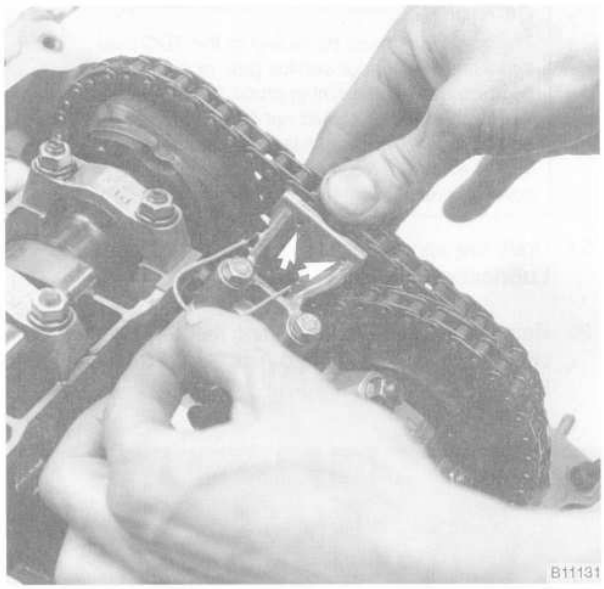

Fig. 16. Secondary timing chain tensioner being locked down. Press tensioner down fully and insert locking wire through holes (**arrow**).

NOTE —
Do not remove the secondary sprockets from the chain unless these parts are being replaced. Wire tie each sprocket to the chain to keep the sprockets timed to each other. Keeping the sprockets timed will simplify installation.

31. Remove the secondary timing chain tensioner.

32. Remove the primary timing chain tensioner from the side of the cylinder head. See Fig. 17.

CAUTION —
Remove the tensioner plug slowly. There is a long spring under tension beneath the plug.

33. Remove the remaining Torx bolt from the timing chain guide. See Fig. 18.

34. Lift the primary chain sprocket off the exhaust camshaft and remove the chain.

35. Inspect the timing chain sprockets. Sprockets that have worn or missing teeth should be replaced. Inspect the guide rail and tensioner rail for deep grooves caused by chain contact. Replace any part that is worn.

NOTE —
- *If any of the sprockets are being replaced due to wear, the chain should also be replaced.*
- *If the crankshaft sprocket requires replacement, the oil pump drive sprocket and chain must be removed as described under* **119 Lubrication System**.

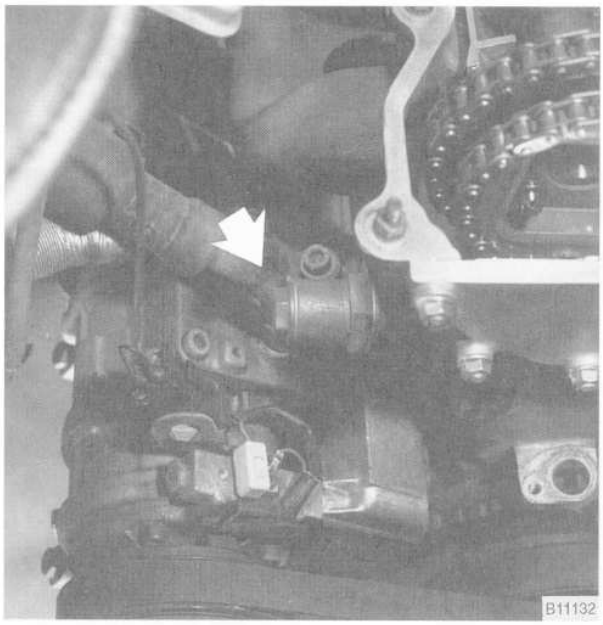

Fig. 17. Primary timing chain tensioner (**arrow**).

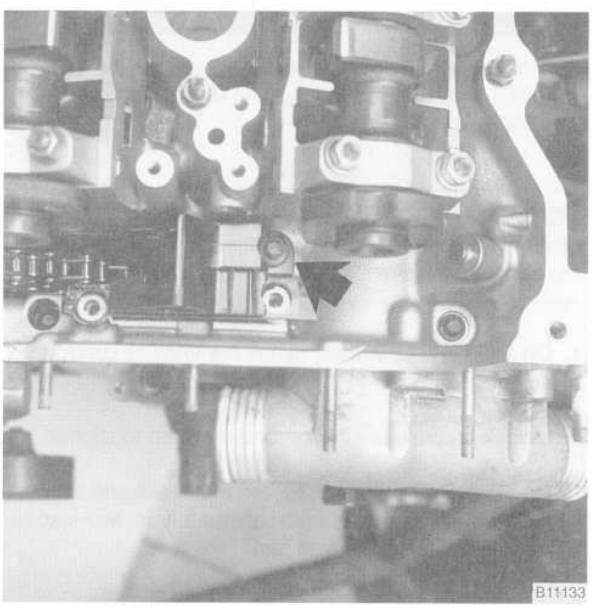

Fig. 18. Timing chain guide mounting bolt (**arrow**).

To install camshaft timing chain (M50/M50TU engine)

1. Install the timing chain to the crankshaft sprocket and tie it up through the cylinder head opening.
2. Using new gaskets, install the front cover.
   - drive the timing cover dowels in just until they protrude slightly from the sealing surface.
   - apply a small bead of silicon sealer (Three Bond 1209 or equivalent) to the corners of the cylinder head where the timing cover meets the head and the block.
   - tap the cover into position to engage the dowels.
   - install the mounting bolts hand tight, including the two outer Torx bolts from above.
   - drive the dowels in flush to the front of the cover.
   - tighten the cover mounting bolts alternately and in stages.

Tightening Torque

- Front timing cover to cylinder block or cylinder head . . . . 10 Nm (89 in-lb)

3. Install the oil pan using a new gasket. See **119 Lubrication System**.
4. Mount the primary timing chain sprocket to the primary chain so that the arrow on the sprocket faces up. Mount the sprocket to the camshaft such that the tapped holes in the camshaft are on the left side of the elongated holes in the sprocket. See Fig. 19.

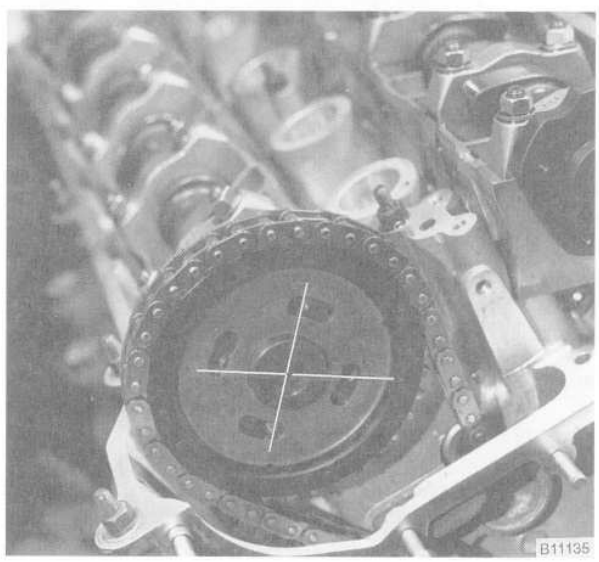

Fig. 19. Primary timing chain sprocket correctly aligned to exhaust camshaft. Elongated sprocket holes should be aligned to left side of threaded camshaft holes.

5. On 1993 and later cars, install BMW special tool no. 11 3 390 into the primary timing chain tensioner sleeve. Thread the tool in finger tight until the slack is removed from the chain. Check that the elongated holes in the primary sprocket are centered to the bolt holes in the camshaft and the chain is free of slack.

NOTE —

BMW special tool no. 11 3 390 is a dummy primary chain tensioner and simulates the function of the hydraulic tensioner.

6. Install the timing chain guide and the secondary chain tensioner. Tighten the mounting bolts.

7. On 1991 and 1992 cars, install the cylinder identification trigger plate to the front of the intake camshaft.

8. Install as an assembly, the secondary chain sprockets and chain so that the arrow(s) on the sprocket(s) are pointing up. Center the mounting holes in the sprockets to the bolt holes in the camshafts. See Fig. 20. On 1993 and later cars, install the thrust washers. Tighten all mounting bolts and/or nuts finger tight only.

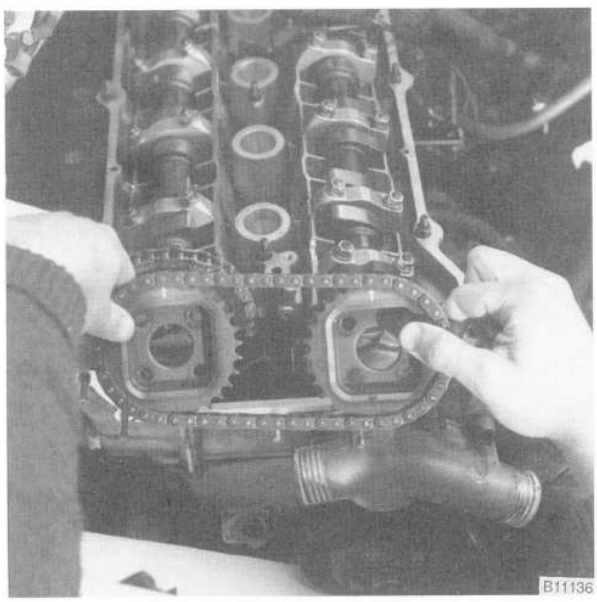

Fig. 20. Secondary chain sprockets and chain being installed on non-VANOS engine. Attach sprockets with arrows pointing up and elongated holes centered.

9. On 1993 and later cars, tighten the intake camshaft sprocket nuts.

Tightening Torque (1993 and later M50TU engine)

- Intake camshaft sprocket stud nut to stud (M6) . . . . . 10 ± 1 Nm (89 ± 9 in-lb)

10. On 1991 and 1992 cars, install the primary chain tensioner so that the cutout in the tensioner piston engages the chain rail as shown in Fig. 21. The chain should be free of slack.

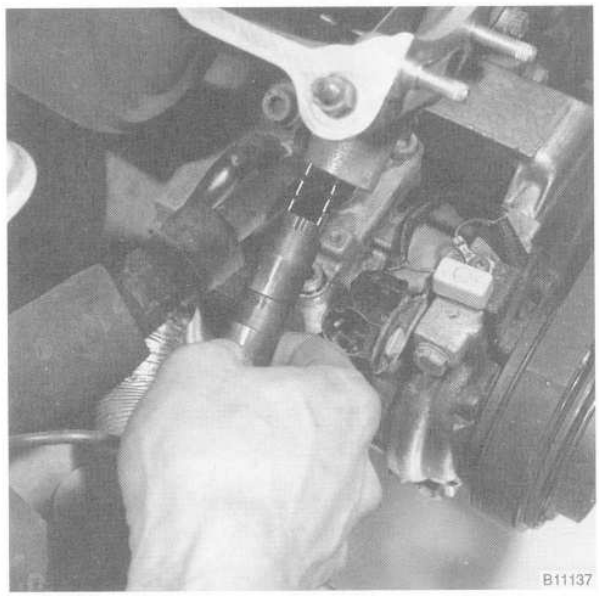

Fig. 21. Primary timing chain tensioner being installed on 1991 and 1992 cars. Piston cutout must be in position shown to engage chain rail.

Tightening Torque (1991 and 1992 M50 engine)

- Primary camshaft timing chain tensioner to tensioner sleeve . . . . . 50 Nm (37 ft-lb)

11. On 1993 and later cars, install the VANOS control unit as described later in this repair group.

12. Unlock and release the secondary chain tensioner.

13. On 1991 and 1992 cars, tighten the intake and exhaust timing chain sprocket bolts alternately in two stages, working at the intake side first.

Tightening Torque (1991 and 1992 M50 engine)

- Secondary timing chain sprockets to camshafts (Torx bolts)
  stage 1 . . . . . .5 Nm (44 in-lb)
  stage 2 . . . . . 22 Nm (17 ft-lb)

14. On 1991 and 1992 cars, install the front timing chain cover to the cylinder head using a new gasket. Apply a small amount of liquid gasket sealer (Three Bond 1209 or equivalent) to the cover alignment dowels.

15. On 1993 and later cars, preload the primary chain by tightening BMW special tool no. 11 3 390 (dummy chain tensioner) to 1.3 Nm (11 in-lb). Then tighten the exhaust camshaft sprocket bolts alternately in two stages.

Tightening Torque

- 1993 and later M50TU engine
  Exhaust camshaft sprockets to camshafts (Torx bolts)
  stage 1 . . . . . 5 Nm (44 in-lb)
  stage 2. . . . . 22 Nm (17 ft-lb)

16. Remove the flywheel locking tool from the transmission bellhousing. Remove the camshaft locking tool from the rear of the cylinder head.

17. Install the crankshaft hub and washer while aligning the woodruff key. Hold the hub stationary and tighten the mounting bolt. Install the vibration damper and pulley, making sure that the locating pin in the hub engages the hole in the vibration damper.

NOTE —
When installing the crankshaft hub mounting bolt, the stepped (shouldered) side of the washer should face the hub.

Tightening Torques

- Crankshaft hub
  to crankshaft. . . . . 410 ± 20 Nm (300 ± 15 ft-lb)
- Vibration damper and pulley
  to crankshaft hub . . . . . 22 Nm (17 ft-lb)

18. Turn the engine over by hand in the direction of rotation at least two full rotations. Reinstall the camshaft and crankshaft locking tools to check engine timing. Remove the locking tools if no faults are found.

19. On 1993 and later cars, remove BMW special tool 11 3 390 (dummy tensioner) from the side of the cylinder head. Install the primary chain tensioner so that the cut-out in the tensioner piston engages the chain rail as shown above in Fig. 21. Install and tighten the access plugs in the VANOS control unit.

Tightening Torques

- Primary camshaft timing chain tensioner
  to tensioner sleeve . . . . . 50 Nm (37 ft-lb)
- Access plugs
  to VANOS control unit . . . . . 50 ± 5 Nm (30 ± 3 ft-lb)

20. Install the cylinder head cover mounting studs. Install the oil baffle cover. Install the cylinder head cover.

Tightening Torque

- Cylinder head cover
  to cylinder head . . . . . 10 Nm (89 in-lb)

21. Installation of the remaining parts is the reverse of removal. When installing the thermostat, make sure the arrow or vent hole faces up. Refill the cooling system as described in **170 Radiator and Cooling System**. Install the oil pan as described in **119 Lubrication System**. Fill the engine with oil and install a new oil filter as described in **020 Maintenance Program**. Additional tightening torques are given below.

NOTE —
Be sure to install the ground wires at the cylinder head cover mounting studs and at the front of the cylinder head and thermostat housing, where applicable.

Tightening Torques

- Coolant drain plug
  to cylinder block . . . . . 40 Nm (30 ft-lb)
- Radiator cooling fan
  to coolant pump . . . . . 40 Nm (30 ft-lb)
- Radiator drain screw to radiator . . . . 2.5 Nm (22 in-lb)
- Upper timing chain cover to cylinder head (M50 engine)
  M6 nut . . . . . 10 Nm (89 in-lb)
  M8 bolt. . . . . 22 Nm (17 ft-lb)
- VANOS control unit to cylinder head (M50TU engine)
  M6 nut . . . . . 10 Nm (89 in-lb)
  M8 bolt. . . . . 22 Nm (17 ft-lb)
- VANOS oil supply pipe
  to VANOS control unit. . . . . 32 Nm (24 ft-lb)

To remove camshaft timing chain (M30 engine)

The M30 engine uses a single chain to actuate the overhead camshaft. A hydraulic tensioner is used to tension the chain.

1. Working beneath rear seat cushion, disconnect the negative (–) terminal of the battery.

> ***CAUTION —***
> *Disconnecting the battery cables may erase fault codes stored in control unit memory.*

2. With the engine cold, drain the engine coolant from the radiator and from the cylinder block. See **170 Radiator and Cooling System**.

WARNING —
Allow the cooling system to cool before opening or draining the system. Hot coolant can scald and burn.

NOTE —
The cylinder block drain is on the exhaust side of the engine, near cylinder no. 5.

3. Remove the radiator cooling fan and the radiator fan shroud. See **170 Radiator and Cooling System**.

NOTE —
The radiator cooling fan nut (32 mm wrench) has left-hand threads.

4. Loosen the intake air boot hose clamps at the intake manifold, the air flow sensor, and the air cleaner. Remove the boots while disconnecting any hoses or fittings in the boots. See Fig. 22.

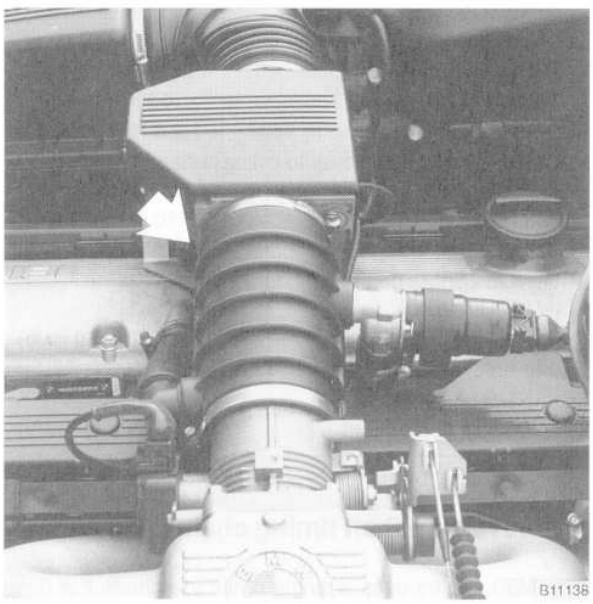

Fig. 22. Intake air boot to be removed (**arrow**).

NOTE —
Some hoses may be secured with one-time crimp-type hose clamps. The clamps may be pried loose with a small screwdriver. Replace the clamps with standard screw-type clamps.

5. Remove the air flow sensor by disconnecting the harness connector and removing the retaining clips from the underside of the meter. See Fig. 23.

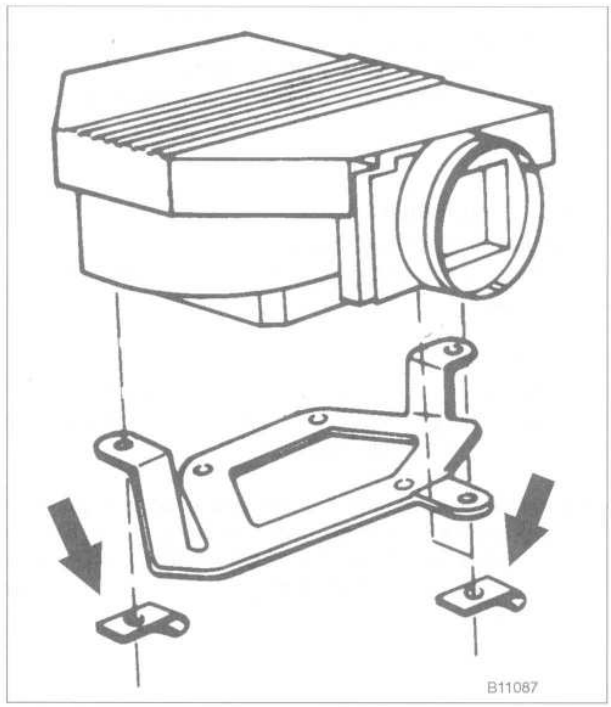

Fig. 23. Air flow sensor mounting clips (**arrows**).

6. Remove the cylinder head cover mounting nuts. Disconnect the crankcase breather hose and remove the cover.

7. Remove the distributor cap and rotor from the front of the camshaft. Remove the rotor adaptor from the camshaft.

8. Remove the bolts from the upper timing chain cover. See Fig. 24. Carefully separate the cover from the cylinder head.

CAUTION —
Use care when removing the cover from the cylinder head gasket. If the cover is stuck, use a sharp knife to separate it from the head gasket.

9. Remove all V-belts. See **020 Maintenance Program**.

10. Remove the coolant pump pulley from the pump. Remove the reference/speed sensor mounting bolt and pull the sensor from its mount on the front timing chain cover.

11. Remove the power steering pump and its brackets. Hang the power steering pump from the chassis using a stiff wire. See **320 Steering and Wheel Alignment**.

12. Secure the crankshaft hub/vibration damper to prevent the crankshaft from turning. Using a 36 mm socket, loosen but do not remove the crankshaft hub center nut.

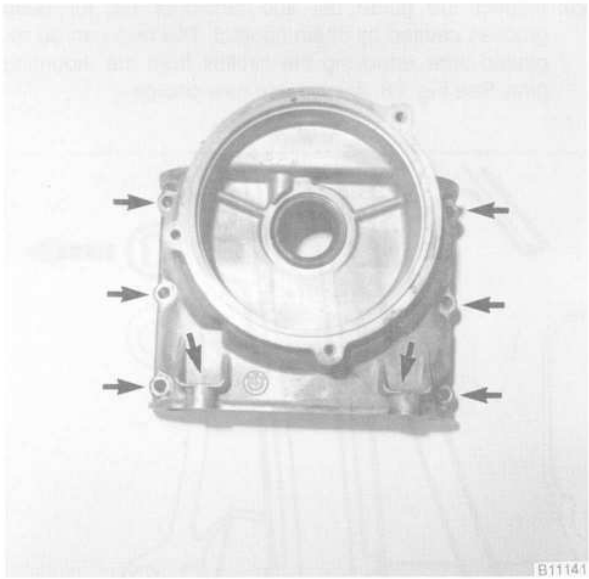

Fig. 24. Upper timing chain cover mounting bolt holes (**arrows**).

NOTE —

The crankshaft hub center nut is tightened to a torque of 440 Nm (318 ft-lb). A heavy duty holding device, such as BMW special tool no. 11 2 220, should be used to hold the crankshaft hub stationary. Use a heavy duty 3/4-inch drive socket and breaker bar to break the nut free.

13. Remove the holding device and rotate the crankshaft clockwise until the engine is at Top Dead Center (TDC or 0/T) on the compression stroke of the No.1 cylinder.

NOTE —

At TDC, the 0/T mark on the vibration damper will be aligned with the cast boss on the lower timing chain cover and the camshaft sprockets bolts will be straight up and down with the locating dowel in the lower left corner of the sprocket. See Fig. 25.

14. Remove the timing chain tensioner from the side of the upper timing chain cover. Be ready to catch the piston spring as the tensioner is removed. Pull the tensioner piston from its bore.

NOTE —

Check the removed piston for free movement of the check ball by shaking the piston. The ball should rattle freely. Blow air into the closed end of the piston. No air should pass. Blow air into the slotted guide end of the piston. Air should pass freely. If any faults are found, try disassembling and cleaning the piston. If the piston cannot be made to operate correctly, it should be replaced.

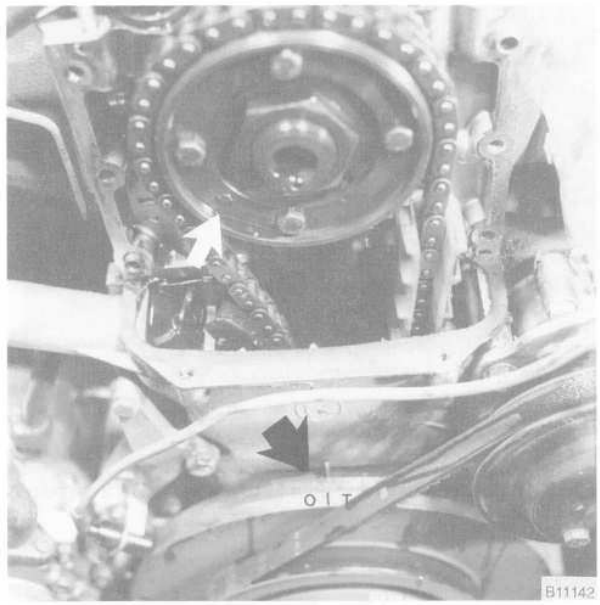

Fig. 25. 0/T (top dead center) mark on vibration damper aligned with mark on timing chain cover (**arrow**). Note position of sprocket locating dowel.

15. Without disturbing the position of the crankshaft, remove the hub/vibration damper mounting nut and the hub/damper assembly from the front of the crankshaft. Remove the woodruff key from the crankshaft.

NOTE —

- *Note the orientation of the woodruff key in the keyway. Replace the woodruff key if it is damaged.*
- *If the hub/vibration damper assembly is difficult to remove, first remove the pulley and damper mounting bolts. Remove the pulley and the damper and then use a puller on the hub. Do not try to lever the vibration damper off, as this may distort the harmonic balance of the damper.*

16. Remove the mounting bolts from the lower timing chain cover.

17. Working from beneath the engine, remove the oil pan mounting bolts that are threaded into the timing chain cover. See Fig. 26. Loosen the remainder of the oil pan mounting bolts. Using a sharp knife, separate the oil pan gasket from the cover.

18. Remove the bolts from the camshaft sprocket and remove the sprocket. See Fig. 27. Carefully remove the chain from the sprockets and tensioning rails.

19. Inspect the timing chain sprockets. Sprockets that have worn or missing teeth should be replaced.

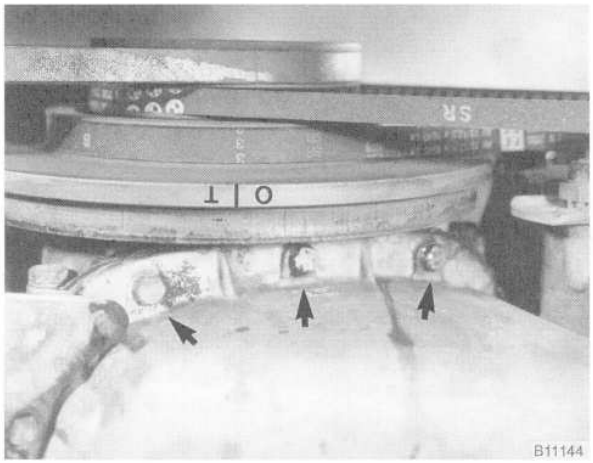

Fig. 26. Front oil pan mounting bolts (**arrows**) as viewed from below.

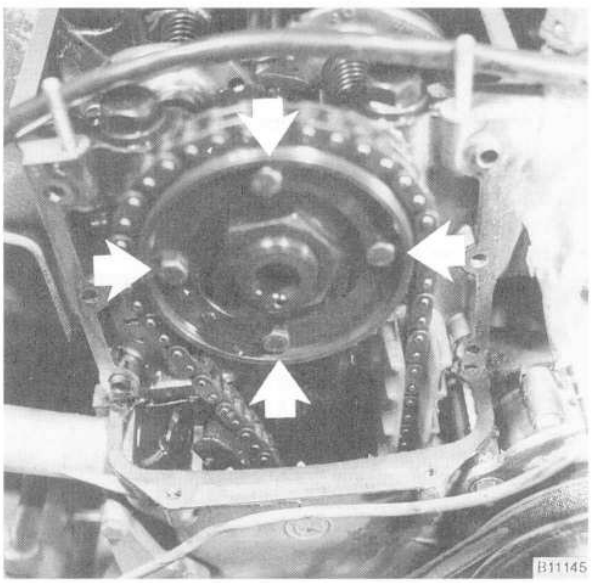

Fig. 27. Camshaft sprocket mounting bolts (**arrows**).

> ***CAUTION —***
> *Do not rotate the crankshaft or the camshaft while the timing chain is removed. The pistons can contact the open valves*

NOTE —

- *If any of the sprockets are being replaced due to wear, the chain should also be replaced.*
- *If the crankshaft sprocket requires replacement, the oil pan and the oil pump drive sprocket must be removed as described in* **119 Lubrication System**. *The crankshaft sprocket can be removed from the crankshaft using a puller. Prior to installing the replacement sprocket, it must first be heated in an oil bath to a maximum temperature of 390° F (200° C). At this temperature, the sprocket can be driven onto the crankshaft while aligning the woodruff keyway.*

20. Inspect the guide rail and tensioner rail for deep grooves caused by chain contact. The rails can be replaced after removing the circlips from the mounting pins. See Fig. 28. Always use new circlips.

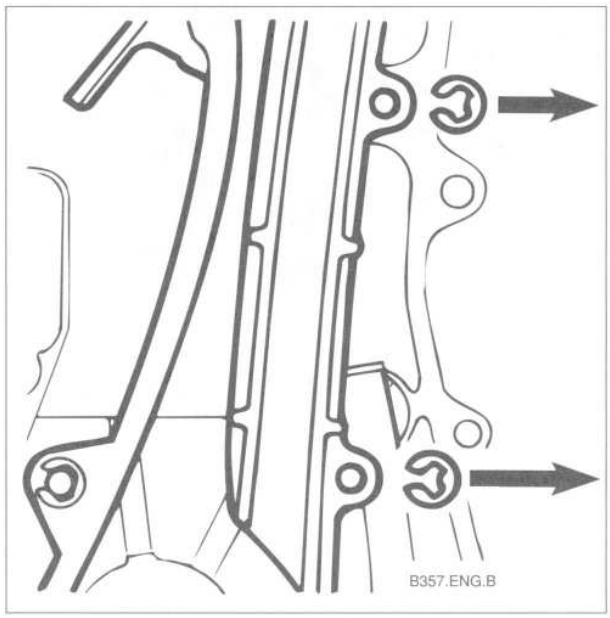

Fig. 28. Guide rail mounting circlips.

To install camshaft timing chain (M30 engine):

1. Install the timing chain, guiding it up through the guide rails and cylinder head gasket. Make sure the chain is properly engaged on the crankshaft sprocket.

2. Install a new crankshaft oil seal in the lower timing chain cover and apply a light coat of engine oil to the seal. Temporarily install the lower cover. Temporarily install the crankshaft woodruff key together with the crankshaft hub/vibration damper. Check that both the camshaft and the crankshaft are set at Top Dead Center (TDC) as shown earlier in Fig. 25.

3. Install the camshaft sprocket with the chain to the camshaft so that all chain slack is on the tensioner side of the chain. Tighten the sprocket mounting bolts.

Tightening Torque

- Camshaft sprocket to camshaft . . . . . 10 ± 1 Nm (89 ± 9 in-lb)

4. Remove the hub/vibration damper and the lower timing chain cover.

5. Apply a light coat of gasket sealer to the lower camshaft timing chain cover gaskets. Install the gaskets on the cylinder block. Apply a light coating of sealant to the exposed portion of the oil pan gasket. Apply an extra amount of sealer (Three Bond Silicon 1207, or equivalent) to each corner of the oil pan/cylinder block surface area.

6. Apply a light coat of engine oil to the lip of the crankshaft oil seal in the lower cover. Install the cover and loosely install its mounting bolts.

NOTE —

Various sizes of bolts are used in the lower timing chain cover. See Fig. 29.

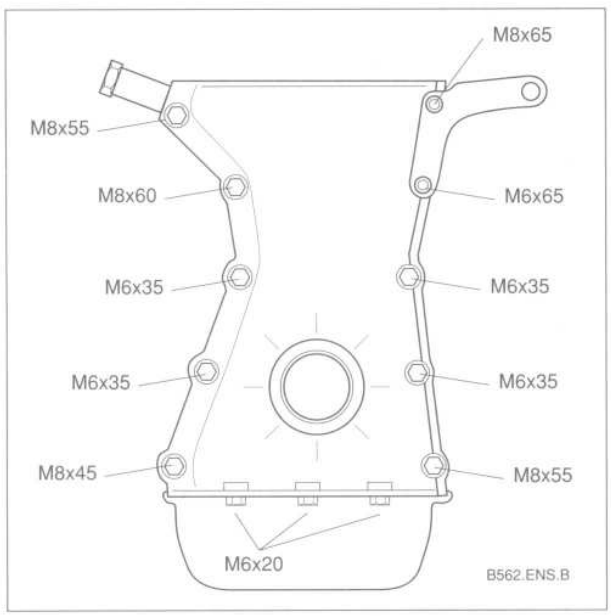

Fig. 29. Lower timing chain cover mounting bolt locations.

7. Loosely install the power steering pump bracket.

8. When all brackets and bolts are installed, tighten the front cover and oil pan bolts in an alternating pattern.

Tightening Torques

- Lower timing chain cover to cylinder block
  M6 bolts . . . . . 10 ± 1 Nm (89 ± 9 in-lb)
  M8 bolts . . . . . 22 ± 2 Nm (16 ± 1 ft-lb)
- Oil pan to cylinder block . . . . . 10 ± 1 Nm (89 ± 9 in-lb)

9. Install the camshaft timing chain tensioner piston, the spring, a new seal, and the chain tensioner plug. The tapered end of the spring should face the plug. Leave the plug a little loose.

NOTE —

Install the camshaft timing chain tensioner piston so that the cutout in the piston engages the chain rail. See Fig. 30.

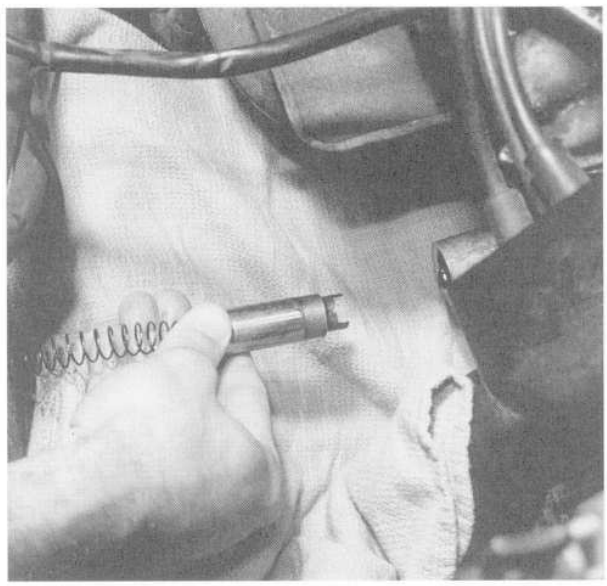

Fig. 30. Timing chain tensioner being installed with cutout positioned to properly engage chain rail.

10. Pour a small amount of oil down the side of the camshaft timing chain cover. Move the tensioner rail back and forth slowly until oil runs out past the plug and resistance can be felt at the rail. Tighten the plug.

Tightening Torque

- Camshaft timing chain tensioner
  to front timing chain cover . . . . . 40 Nm (30 ft-lb)

11. Install the crankshaft hub/vibration damper to the crankshaft, while aligning the keyway with the key. Hold the hub stationary and tighten the nut.

12. Turn the engine over two complete revolutions and recheck the timing marks.

Tightening Torque

- Crankshaft hub
  to crankshaft . . . . . 440 ± 10 Nm (317 ± 7 ft-lb)
- Vibration damper and pulley
  to crankshaft hub . . . . . 22 ± 2 Nm (16 ± 1 ft-lb)

13. Apply a light coat of sealer to the two upper camshaft timing chain cover gaskets. Set the gaskets into position on the cover. Apply a sealer (Three Bond Silicon 1207, or equivalent) to each corner of the cylinder head/upper timing chain cover surface area. See Fig. 31.

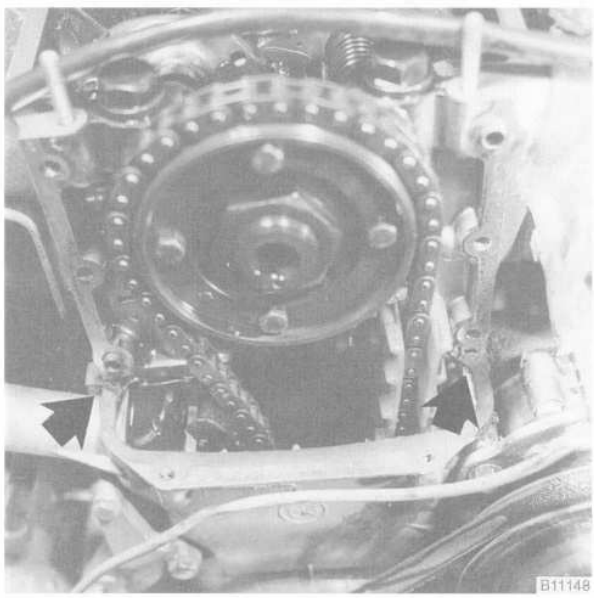

Fig. 31. Apply sealer (**arrows**) to corners before installing chain cover.

14. Apply a light coat of engine oil to the lip of the camshaft oil seal in the upper timing chain cover. Install the cover and hand-tighten the mounting bolts. Tighten the bolts in stages.

NOTE —
Upper timing chain cover mounting bolts vary in size. See Fig. 29 for correct bolt orientation.

Tightening Torque
- Front timing chain cover to cylinder head and lower timing chain cover . . . . . 10 Nm (89 in-lb)

15. Install the cylinder head cover.

Tightening Torque
- Cylinder head cover to cylinder head . . . . . 10 Nm (89 in-lb)

16. Install the coolant pump pulley.

17. Install all engine drive belts. See **020 Maintenance Program**.

18. Install the radiator fan, fan shroud, thermostat housing, and refill the cooling system. See **170 Radiator and Cooling System**.

19. Install the ignition components. Use a thread-locking compound on the ignition rotor adaptor bolt.

Tightening Torque
- Ignition rotor adaptor to camshaft (install with thread locking compound) . . . 23 ± 1 Nm (17 ± 1 ft-lb)

20. Reconnect the battery. Check all fluid levels.

To check and adjust camshaft timing (M60 engine)

Special BMW service tools are needed for this procedure. Read the procedure through before beginning the job. If the camshafts are not properly timed, the pistons can contact the valves.

1. Disconnect negative (–) battery cable.

CAUTION —
Disconnecting the battery cables may erase fault codes stored in control unit memory.

2. Remove radiator cooling fan and fan shroud. See **170 Radiator and Cooling System**.

NOTE —
The radiator cooling fan nut (32 mm wrench) has left-hand threads.

3. Remove spark plugs. See **020 Maintenance Program**.

4. Remove cylinder head covers from left and right cylinder heads. See **116 Cylinder Head and Valvetrain**.

5. Remove camshaft oil pipes from top of left and right cylinder heads. See Fig. 32.

6. Remove timing chain tensioner from side of right timing chain cover. Install in its place BMW special tool no. 11 3 390. Thread special tool in until no slack is present in chain, tightening to 1.3 Nm or 12 in-lb.

NOTE —
- *BMW special tool no. 11 3 390 is a dummy primary chain tensioner and simulates the function of the hydraulic tensioner.*
- *Assume left /right orientation as sitting in driver's seat.*

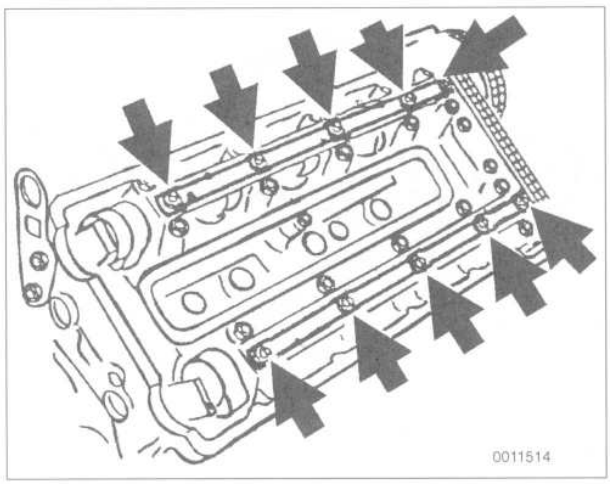

Fig. 32. Camshaft oil pipe mounting nuts (**arrows**). Remove pipes from both cylinder heads.

7. Set engine to TDC by rotating engine in normal operating direction. See Fig. 33.
   - arrows on intake camshaft sprockets point up.
   - camshaft lobes at cylinder no. 1 face each other
   - mark on vibration damper aligns with cast boss on front timing chain cover.

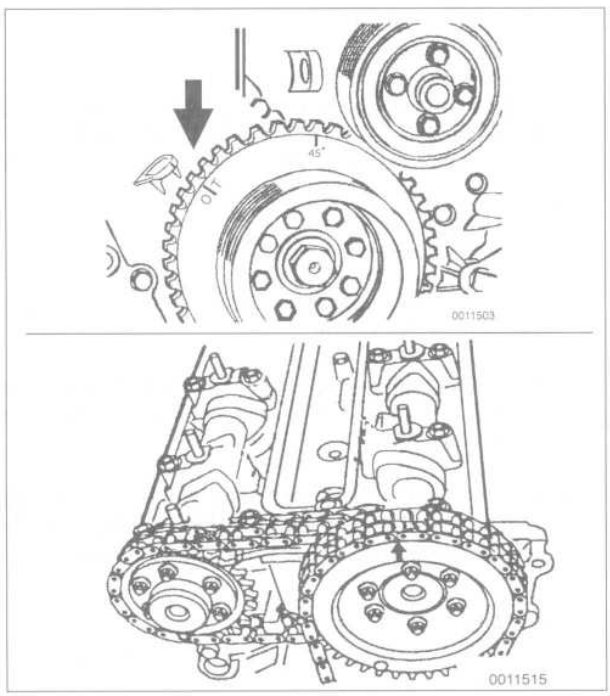

Fig. 33. Engine set to TDC: O/T mark on vibration damper aligns with mark on front timing chain cover (top). Arrow on intake camshaft sprocket points up (right cylinder head shown). Note cyl. no.1 camshaft lobe position.

8. Loosen three accessible bolts on all camshaft sprockets at left and right cylinder heads.

NOTE —
Hold the camshaft stationary (at hex on camshaft) when loosening or tightening the camshaft sprocket mounting bolts.

9. Turn engine over one complete revolution. Loosen remaining bolts on camshaft sprockets.

10. Turn engine over to TDC again. Hold crankshaft and camshafts at TDC position using BMW special tools. See Fig. 34. Turn camshafts at hex slightly to ensure proper fit of camshaft locking tools.

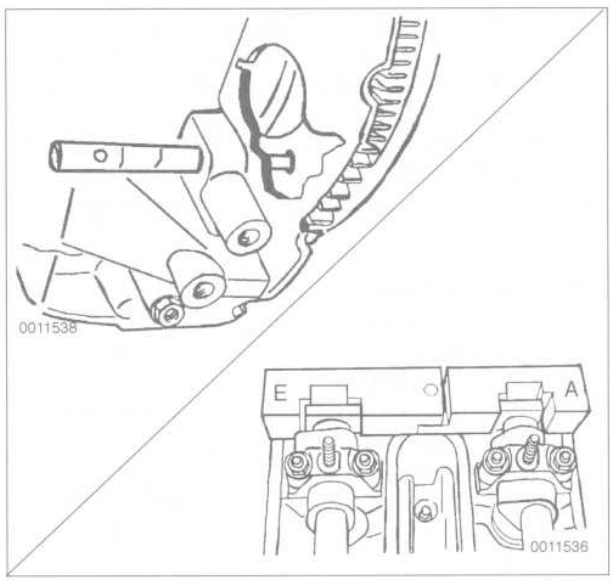

Fig. 34. Lock crankshaft at TDC using BMW special tool no. 11 2 300 (left). Lock camshafts at TDC using BMW special tools 11 2 442/446 (cyl. 5-8) and tools 11 2 445/441 (cyl. 1-4). Install camshaft tools with letter A on exhaust side and letter E on intake side.

CAUTION —
The camshafts must be locked in the TDC position at the rear of the camshafts. The arrows on the sprockets should not be used to set the engine at TDC.

11. Tighten top three camshaft sprocket bolts using the sequence listed.

Tightening Torques

- Camshaft sprocket tightening sequence
  1. exhaust, left cylinder head . . . . . .15 Nm (11 ft-lb)
  2. exhaust, right cylinder head . . . . . .15 Nm (11 ft-lb)
  3. intake, left cylinder head . . . . . .15 Nm (11 ft-lb)
  4. intake, right cylinder head . . . . . .15 Nm (11 ft-lb)

NOTE —

Assume left and right orientation as sitting in driver's seat.

12. Remove the crankshaft and camshaft locking tools. Turn the engine over in normal operating direction one complete revolution. Tighten the remaining sprocket mounting bolts using the sequence and torque listed earlier.

13. Remove the dummy chain tensioner and install the chain tensioner.

14. The remainder of installation is the reverse of removal.

Tightening Torques

- Timing chain tensioner to timing chain cover . . . . . 40 Nm (30 ft-lb)
- Camshaft lubrication pipe to camshaft bearing caps . . . . . 10 Nm (89 in-lb)
- Cylinder head cover to cylinder head/ timing chain cover
  - M6 . . . . . 10 Nm (89 in-lb)
  - M7 . . . . . .15 Nm (11 ft-lb)
- Radiator cooling fan to coolant pump . . . . . 40 Nm (30 ft-lb)
- Spark plug to cylinder head . . . . 23±3 Nm (17±2 ft-lb)

VANOS (VARIABLE VALVE TIMING)

1993 and later 525i models are equipped with a variable valve timing system, called VANOS. This system is controlled by the Motronic DME 3.3.1 engine management system and dynamically adjusts intake camshaft timing based on engine load, engine speed and engine temperature.

The main components of the VANOS system are the control unit with piston housing and integral spool valve, and the modified intake camshaft. See Fig. 35.

When the engine is running, the piston housing is supplied with pressurized engine oil. At idle, the solenoid is in the off position (de-energized) and valve timing is maintained in the normal position. When the solenoid is energized, the gear cup piston moves forward to advance the camshaft by 12.5°.

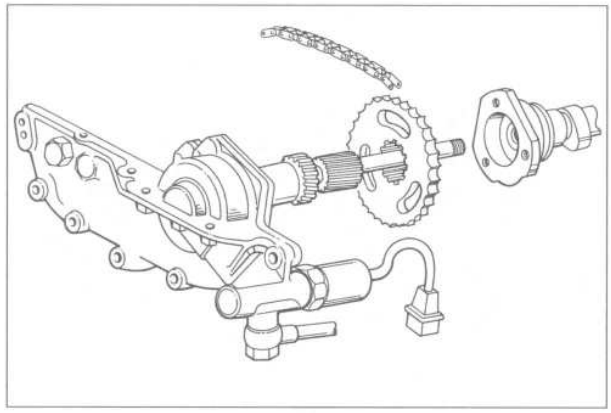

Fig. 35. VANOS control unit with modified intake camshaft.

WARNING —

Special BMW service tools are required to check and repair the VANOS system. Read the procedures through before beginning the job.

To test VANOS system operation

There are 3 special tools required to check VANOS operation; an electrical test lead (BMW special tool no. 12 6 410), an air line fitting (BMW special tool no. 11 3 450), and a crankshaft TDC locking tool (BMW special tool no. 11 2 300).

The test lead is used to power the solenoid, simulating the ground signal from the DME control unit. The air line fitting takes the place of the oil supply pipe fitting and simulates oil pressure. The locking tool positions and locks the crankshaft at TDC.

1. Remove the alternator cooling air duct.

2. Disconnect the crankcase ventilation hose fitting from the cylinder head cover.

3. Remove the top plastic engine covers. Disconnect the ignition coil harness connectors from the coils. Remove the ignition coils.

4. Remove the cylinder head cover mounting bolts and remove the cylinder head cover. Unclip and remove the oil baffle cover from above the intake camshaft.

NOTE —

Note the arrangement of the cylinder head cover bolt insulators and gaskets during removal.

5. Set the engine to approximate TDC by rotating the engine in the normal operating direction until the camshaft lobes at cylinder no. 1 are facing each other. See Fig. 8, given earlier.

6. Set the engine to TDC by aligning the "0/T" mark (0°TDC) on the front vibration damper with the cast boss on the lower timing chain cover. See Fig. 9, given earlier.

7. Lock the crankshaft in position by inserting BMW special tool no. 11 2 300 through the transmission bellhousing and into the hole in the flywheel or drive plate. See Fig. 36.

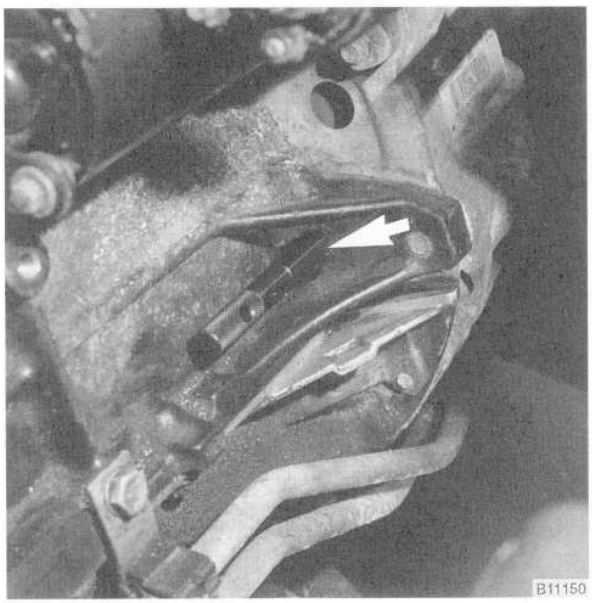

Fig. 36. BMW special tool no. 11 2 300 installed through bellhousing and into flywheel.

NOTE —

Confirm that the locking tool has been correctly installed by trying to rotate the crankshaft.

8. Remove the oil line fitting from the bottom of the VANOS control unit.

NOTE —

Wrap the VANOS oil line fitting with a shop rag to absorb leaking oil.

9. Using the hollow bolt and seals from the oil supply line, install BMW special tool no. 11 3 450 (air line fitting) and connect a supply of compressed air (30-115 psi) to the fitting.

10. Measure and record the distance between the trigger plate edge and the side of the secondary timing chain tensioner. See Fig. 37.

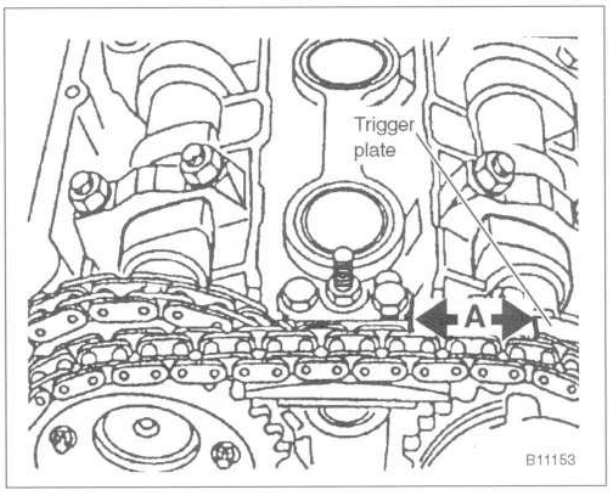

Fig. 37. VANOS reference measurement (dimension **A**) between trigger plate (sender gear) and side of secondary chain tensioner.

11. Disconnect the harness connector from the VANOS solenoid. Connect BMW special tool no. 12 6 410 (electrical test lead) to the VANOS solenoid connector.
    - Connect the positive (+) test lead to the positive (+) terminal of the battery. Connect the negative (–) test lead to chassis ground. The solenoid should audibly click and the intake camshaft should advance.

> ***CAUTION —***
>
> - *Be sure to connect the test harness polarity correctly. If the polarity is reversed, the internal diode in the VANOS solenoid will be destroyed. Although the solenoid will still function with a faulty diode, a fault code may be set in the DME memory.*
>
> - *To confirm voltage polarity, turn the ignition on and check for positive (+) battery voltage at the terminal corresponding to the red/white wire in the main harness connector. Check that the positive terminal (+) in the main connector corresponds to the same terminal in the solenoid connector that is being connected to the battery.*

12. With the solenoid actuated, measure and record the new distance between the trigger plate edge and the side of the secondary timing chain tensioner, as shown above in Fig. 37.

13. The difference between the first measurement (step 11) and the second measurement (step 13) should be at least 8.5 mm (0.3346 in.). If any faults are found, the solenoid may be faulty, or the hydraulic control unit may be faulty or incorrectly installed.

14. Check the VANOS solenoid by removing it from the control unit. Check that the solenoid plunger and the control unit plunger move freely. Install the solenoid using the tightening torque given below.

NOTE —

- *The solenoid is available as a replacement part. If the control unit plunger is sticking, the complete control unit will have to be replaced.*
- *If the VANOS system does not advance correctly and no other faults can be found, it is possible that the VANOS control unit may have been installed incorrectly—especially if the camshaft sprockets have previously been removed for other repairs. Check the installation by removing and reinstalling the control unit as described later.*

15. Remove the crankshaft locking tool. Remove the special test equipment. Install the oil supply line using new seals and reconnect the solenoid connector. The remainder of installation is the reverse of removal.

Tightening Torque

- Cylinder head cover to cylinder head . . . . . 10 Nm (89 in-lb)
- VANOS oil supply line to VANOS control unit . . . . . 32 Nm (24 ft-lb)
- VANOS solenoid to VANOS control unit . . . . . 30 Nm (22 ft-lb)

To remove VANOS control unit

Special BMW service tools are required to remove the VANOS control unit. Read the procedure through before starting the job.

1. Remove the alternator cooling air duct.
2. Disconnect the crankcase ventilation hose fitting from the cylinder head cover.
3. Remove the top plastic engine covers. Disconnect the ignition coil harness connectors from the coils. Remove the ignition coils.
4. Remove the cylinder head cover mounting bolts and remove the cylinder head cover. Unclip and remove the oil baffle cover from above the intake camshaft.

NOTE —

Make note of the mounting bolt insulator arrangement during removal of the cylinder head cover.

5. Set the engine to TDC by rotating the engine in the normal operating direction until the camshaft lobes at cylinder no. 1 are facing each other and the "0/T" mark (0°TDC) on the vibration damper lines up with the cast boss on the lower timing chain cover. See Fig. 38.

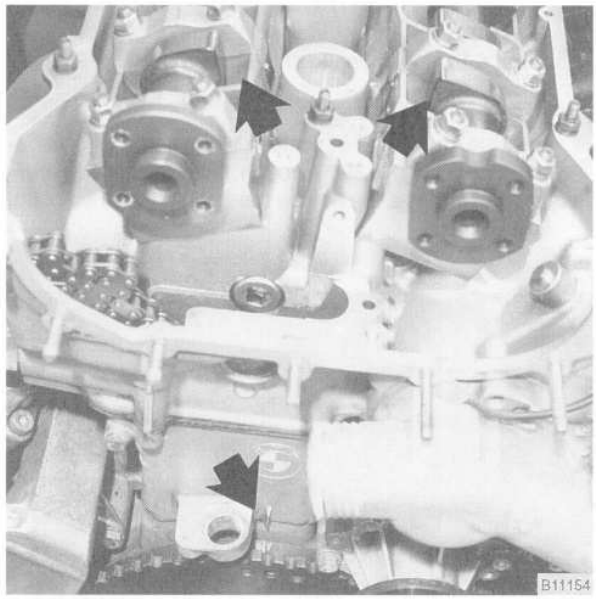

Fig. 38. Engine set to TDC—camshaft lobes face in and 0/T mark (0°TDC) on vibration damper aligns with boss on cover (arrows). Camshaft sprockets shown removed.

6. Lock the crankshaft at TDC by inserting BMW special tool no. 11 2 300 through the transmission bellhousing and into the flywheel or drive plate. See Fig. 36 above.

NOTE —

Confirm that the locking tool has been correctly installed by trying to rotate the crankshaft.

7. Remove the three cylinder head cover mounting studs from the rear of the head. Lock the camshafts at TDC by mounting BMW special tool no. 11 3 240 over the square ends of the camshafts. Check that the tool is squarely seated on the cylinder head gasket surface. If necessary, rotate the camshafts slightly using a 24 mm wrench.

CAUTION —

The camshafts must be locked in the TDC position using the special service tool or an equivalent before removing the timing chain. The arrows on the sprockets should not be used to accurately set the engine to TDC. The special tool holds the camshafts parallel to each other and perpendicular to the valve cover gasket surface.

8. Disconnect the harness connector and oil line fitting from the bottom of the VANOS control unit.

NOTE —

Wrap the VANOS oil line fitting with a shop rag to absorb leaking oil.

9. Remove the two access plugs from VANOS control unit, just in front of the exhaust camshaft sprocket. Loosen the four exhaust camshaft sprocket mounting bolts using a Torx E10 socket.

NOTE —
Removal of the access plugs allows the lower exhaust camshaft sprocket mounting bolts to be accessed.

10. Depress the secondary timing chain tensioner and lock it down by inserting a stiff piece of wire into the holes in the tensioner as shown in Fig. 39.

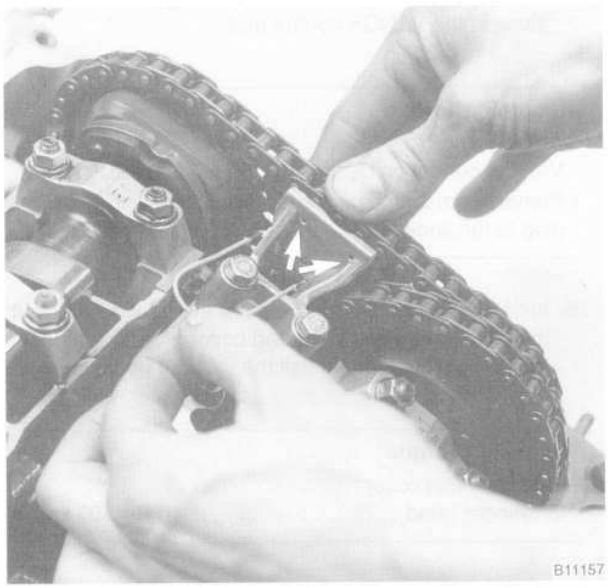

Fig. 39. Secondary timing chain tensioner being locked down. Press tensioner down and insert locking wire through holes (arrow).

11. Remove the VANOS control unit mounting nuts and bolt and slide the control unit off the front of the cylinder head.

To install VANOS control unit

CAUTION —
Incorrect installation of the VANOS control may result in damage to the engine valvetrain.

1. Lock the camshafts and the crankshaft in the TDC position with the BMW special tools as describe above in the removal procedure.

CAUTION —
The camshafts and crankshaft must be locked in the TDC position with the BMW special tools no. 11 2 300 and 11 3 240. If the camshafts and crankshaft are not positioned exactly at TDC, the valves can contact the pistons when the engine is turned over.

NOTE —
Be sure that the secondary timing chain tensioner is locked down and the exhaust camshaft mounting bolts are loose before proceeding.

2. Remove the primary timing chain tensioner from the side of the cylinder head. See Fig. 40. Install BMW special tool no. 11 3 390 into the primary timing chain tensioner sleeve. Thread the tool in finger tight until the slack is removed from the chain.



Fig. 40. Primary timing chain tensioner (**arrow**).

CAUTION —
Remove the tensioner slowly. There is a long spring under tension beneath the end plug.

NOTE —
BMW special tool no. 11 3 390 is a dummy primary chain tensioner and simulates the function of the tensioner.

3. Apply a small amount of liquid gasket sealer (Three Bond 1209 or equivalent) to the VANOS housing alignment dowels on the front of the cylinder head. Install a new gasket.

4. Push the VANOS piston gear cup into the VANOS housing until it bottoms out in the housing.

5. Slide the VANOS control unit into place just until the VANOS gear cup piston (internal splines) meshes with the camshaft gear. Do not push the control unit fully into position.

6. Turn the secondary timing chain sprockets so that they contact the right-hand stop (clockwise as viewed from the front of the engine).

7. While slowly pushing the VANOS control unit towards the camshaft, turn the secondary sprockets counterclockwise **only enough** to mesh the gear cup (external splines) with the camshaft sprocket splines.

> ***CAUTION —***
> *It is critical that the secondary sprockets be turned only the minimum amount necessary to engage the gear cup. If this procedure is done incorrectly, the VANOS system may not function correctly and engine damage could result.*

8. Slide the VANOS unit all the way in until it is fully seated. Install and tighten the VANOS control unit nuts.

NOTE —
As the control unit is installed, the secondary gears will rotate in the counterclockwise direction. It may be necessary to guide sprockets counterclockwise as the control unit is installed.

9. Connect the harness connector to the VANOS solenoid. Using new seals, install the oil line fitting.

Tightening Torques
- VANOS control unit to cylinder head
  M6 nut . . . . . 10 Nm (89 in-lb)
  M8 bolt . . . . . 22 Nm (17 ft-lb)
- VANOS oil supply line
  to VANOS control unit . . . . . 32 Nm (24 ft-lb)

10. Slowly unlock and release the secondary chain tensioner.

11. Preload the primary chain by tightening BMW special tool no. 11 3 390 (dummy chain tensioner) to 1.3 Nm (11 in-lb). Then tighten the exhaust camshaft sprocket mounting bolts alternately in two stages.

Tightening Torque
- 1993 and later M50TU engine
  Secondary timing chain sprockets to camshafts (Torx bolts)
  stage 1 . . . . . .5 Nm (44 in-lb)
  stage 2. . . . . .22 Nm (17 ft-lb)

12. Remove the flywheel locking tool from the transmission bellhousing. Remove the camshaft locking tool from the rear of the cylinder head.

13. Turn the engine over by hand at least two full crankshaft rotations. Reinstall the camshaft locking tool and the flywheel locking tool to make sure all adjustments are correct. If the settings are correct, remove the locking tools.

14. Remove BMW special tool 11 3 390 (dummy chain tensioner) from the side of the cylinder head. Install the primary chain tensioner so that the cutout in the tensioner piston engages the chain rail as shown earlier in Fig. 21. Using new seals, install and tighten the access plugs in the VANOS control unit.

Tightening Torque
- Access plugs to
  VANOS control unit. . . . . 50 ± 5 Nm (30 ± 3 ft-lb)
- Primary camshaft timing chain tensioner
  plug to tensioner sleeve . . . . . 50 Nm (37 ft-lb)

15. Install the oil baffle cover above the intake camshaft. Install the three cylinder head cover mounting studs to the rear of the head. Install the cylinder head cover.

Tightening Torque
- Cylinder head cover
  to cylinder head . . . . . 10 Nm (89 in-lb)

16. Installation of the remaining parts is the reverse of removal.

NOTE —
Be sure to install the ground wires at the cylinder head cover mounting studs and at the front of the cylinder head.

118 Camshaft Timing Belt

GENERAL 118-1

CAMSHAFT TIMING BELT REPLACEMENT (M20 ENGINE) 118-1

To remove camshaft drive belt (M20 engine) . 118-1
To install camshaft drive belt (M20 engine) . . . 118-3

GENERAL

The 1989 and 1990 525i models use an overhead camshaft that is actuated by a toothed rubber drive belt. See Fig. 1. Due to belt composition and high under-hood temperatures, the belt is subject to wear. BMW recommends that the belt be replaced at least every 50,000 miles, every four years, or anytime belt tension is relieved.

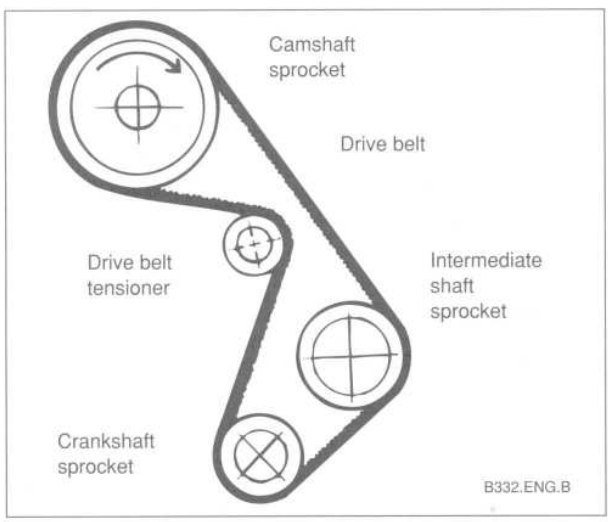

Fig. 1. Camshaft drive belt configuration with tensioner and sprockets.

> ***CAUTION —***
> *If the belt fails in service, the pistons will contact and bend the valves.*

CAMSHAFT TIMING BELT REPLACEMENT (M20 ENGINE)

To remove camshaft drive belt (M20 engine)

1. With the engine cold, drain the coolant and then remove the radiator and the radiator cooling fan. See **170 Radiator and Cooling System.**

> ***WARNING —***
> *Allow the cooling system to cool before opening or draining the system.*

> ***NOTE —***
> *The radiator cooling fan nut (32 mm wrench) has left-hand threads.*

2. Remove the metal coolant cross pipe and its hoses from the front of the engine. The pipe is held in place with two bolts.
3. Remove the distributor cap, the ignition rotor, and the black protective cover from behind the rotor. See **120 Ignition System—DME.** Place the cap out of the way.
4. Loosen the coolant pump pulley mounting bolts.
5. Remove all engine V-belts (alternator, air conditioning compressor, power steering pump). See **020 Maintenance Program.**
6. Remove the coolant pump pulley bolts and the pulley.
7. Remove the alternator bracket from the upper drive belt cover. See Fig. 2.
8. Remove the rubber guard from the side of the upper drive belt cover.

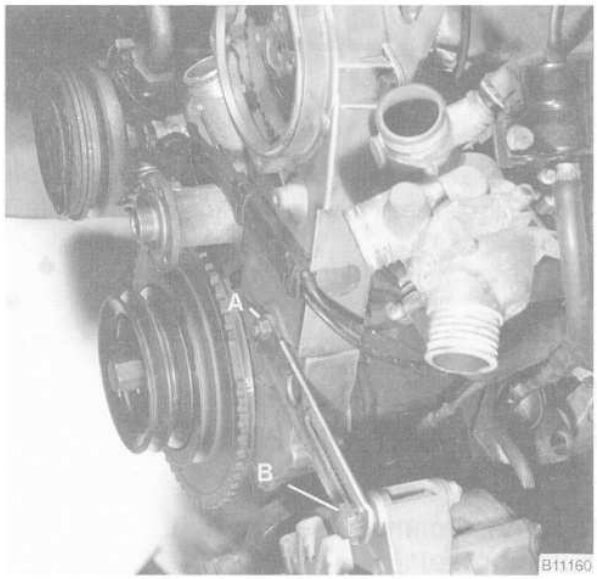

Fig. 2. Remove alternator bracket by removing mounting nut (**A**) and alternator tensioning bolt (**B**).



Fig. 3. Upper camshaft drive belt cover mounting bolts (**arrows**).

9. Remove the two mounting bolts from the upper cover. Unclip and lift the wiring duct off the front of the cover.

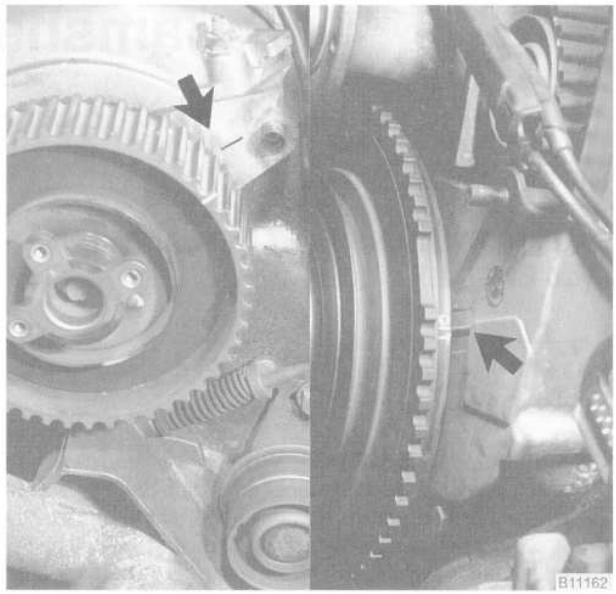

Fig. 4. Camshaft sprocket aligned with mark on cylinder head (**left arrow**) and Top Dead Center (TDC) mark on vibration damper aligned with mark on lower drive belt cover (**right arrow**).

10. Lift the cover out together with the engine lifting bracket. See Fig. 3.

11. Using a socket wrench (22 mm) on the center crankshaft hub bolt, rotate the crankshaft clockwise until the engine is at Top Dead Center (TDC or 0/T) of the No. 1 cylinder. See Fig. 4.

NOTE —
At TDC, the "0/T" mark on the vibration damper will align with the boss on the lower camshaft drive belt cover. The mark on the camshaft drive belt sprocket will align with the mark on the cylinder head. See Fig. 4.

12. Remove the six bolts that hold the lower drive belt pulley and the vibration damper to the front of the crankshaft. Remove the pulley and the damper.

13. Remove the lower camshaft drive belt cover mounting bolt together with the cover.

14. Loosen the upper bolt that secures the belt tensioner to the front of the engine. Loosen the tensioner lower mounting nut at the base of the long stud.

15. Using a long screwdriver, push the tensioner in as far as it will go to relieve the belt tension and then tighten the upper bolt. See Fig. 5. Remove the belt from the sprockets.



Fig. 5. Push in on the tensioner with screwdriver, then tighten top bolt (**arrow**).

> ***CAUTION —***
> *Once the belt is removed, do not disturb the camshaft or crankshaft position. Rotation of either shaft could result in engine damage.*

16. Inspect the camshaft belt sprocket and the tensioner pulley. If the pulley catches, is noisy, or has radial (side-to-side) or axial (in-and-out) play, or does not spin freely, it should be replaced.

To remove the tensioner, first remove the upper mounting bolt and swing the tensioner down until the spring tension is relieved. Then remove the lower mounting nut and the tensioner. When installing the new tensioner, make sure the spring assembly correctly engages the hole in the tensioner and the detent in the coolant pump. See Fig. 6.

To install camshaft drive belt (M20 engine)

1. Check that the crankshaft and camshaft timing marks are correctly aligned. See Fig. 4 above. Also check that the notch on the inner cover aligns with the mark on the sprocket. See Fig. 7.

2. Install the new belt beginning at the crankshaft sprocket, working in a counterclockwise direction without slack, slipping the belt over the intermediate shaft and the camshaft sprockets, and the camshaft belt tensioner pulley. All of the belt slack should be at the tensioner.

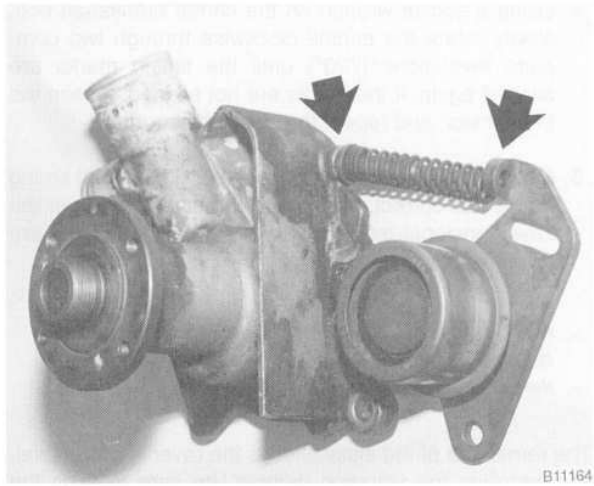

Fig. 6. Camshaft drive belt tensioner and coolant pump assembly. Tensioner spring must engage hole in tensioner and detent in pump (**arrows**).

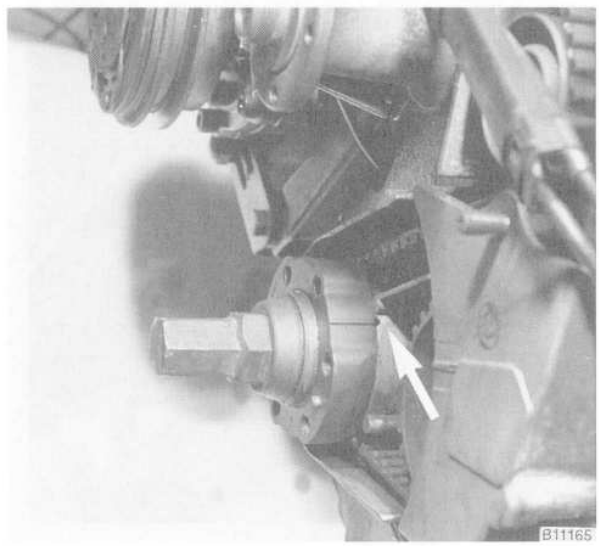

Fig. 7. Crankshaft hub aligned with mark on front engine cover (**arrow**).

> ***CAUTION —***
> *Do not use any tools to force the camshaft drive belt onto the pulleys.*

3. With the belt correctly positioned on the sprockets, slowly loosen the camshaft belt tensioner pulley upper retaining bolt so that the belt is tensioned.

4. Using a socket wrench on the center crankshaft bolt, slowly rotate the engine clockwise through two complete revolutions (720°) until the timing marks are aligned again. If the marks are not aligned, loosen the belt tension and repeat the above procedure.

5. Once the alignment of crankshaft and camshaft timing marks are correct, first torque the upper and then the lower tensioner mounting bolts. Tightening torques are given below.

NOTE —
Rotating the engine automatically tensions the belt to the correct tightness.

The remainder of the installation is the reverse of removal. When installing the vibration damper, be sure to align the crankshaft hub locating pin to the hole in the vibration damper. See Fig. 8.

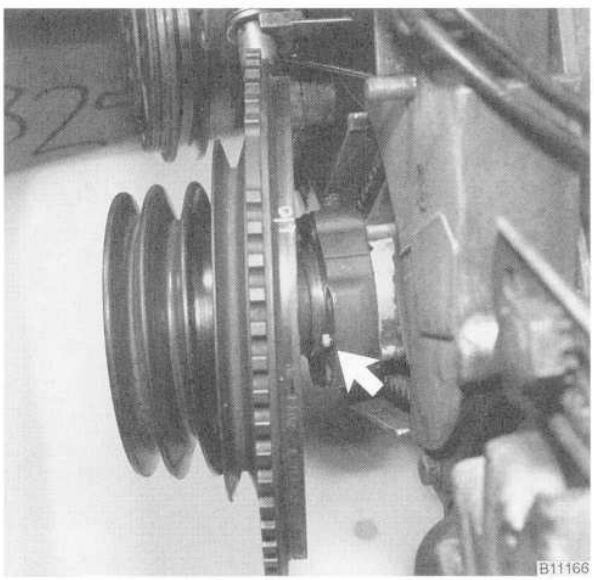

Fig. 8. Crankshaft hub locating pin (**arrow**).

Install the engine V-belts and adjust belt tension as described in **020 Maintenance Program**. Place a label in the engine compartment noting camshaft drive belt replacement date and odometer reading. Refill the cooling system as described in **170 Radiator and Cooling System**.

Tightening Torques

- Camshaft drive belt tensioner to cylinder block . . . . . 22 ± 2 Nm (16 ± 1 ft-lb)
- Camshaft drive belt covers (upper and lower) to cylinder block
  - M6 nuts or bolts . . . . . .9 to 11 Nm (6.5 to 8 ft-lb)
  - M8 nuts or bolts . . . . . 22 ± 2 Nm (16 ± 1 ft-lb)
- Vibration damper to crankshaft hub
  - M8 bolts . . . . . 22 ± 2 Nm (16 ± 1 ft-lb)
- Camshaft sprocket to camshaft . . . . . 65 to 70 Nm (47 to 50 ft-lb)

119 Lubrication System

GENERAL 119-1

TROUBLESHOOTING 119-1
- To test oil pressure 119-1
- To test oil pressure warning system 119-2
- To test oil level sensor 119-2

OIL PAN 119-3
- To remove and install oil pan (M20 engine) 119-3
- To remove and install oil pan (M30 engine) 119-4
- To remove and install oil pan (M50 engine) 119-5
- To remove and install oil pan (M60 engine) 119-6

OIL PUMP 119-7
- To remove and install oil pump 119-7

GENERAL

Engine oil pressure is generated by a gear-type pump mounted to the bottom of the engine block. On 1989 and 1990 525i models (M20 engine), the oil pump is shaft driven by the intermediate shaft. On 1991 and later 525i models (M50 engine) and all 535i models (M30 engine), the oil pump is chain driven by the crankshaft.

NOTE—
Oil change procedure and oil filter replacement are covered in **020 Maintenance Program.**

The oil pan and the oil pump can be removed with the engine installed, although engine lifting equipment is necessary for some applications.

All engines are equipped with an oil pressure warning system and an oil level warning system to help prevent serious engine damage. Other safety features include a filter bypass to guard against bursting the filter due to over pressure and an oil pump pressure relief valve to prevent excessive system pressure.

TROUBLESHOOTING

The lubrication warning system consists of an oil pressure switch mounted in the oil circuit, an oil level sensor mounted in the oil pan, an instrument panel warning light, and graphic check control displays. The check control display will also warn the driver if either the oil level sensor or the oil pressure sensor are faulty or disconnected.

CAUTION—
If the check control displays ENGINE OIL PRESS after the engine is started, or if the red oil pressure warning light comes on or flashes on while driving, always assume that the oil pressure is low.

To test oil pressure

1. Disconnect the harness connector from the oil pressure switch. Thoroughly clean around the switch and then remove it. See Fig. 1. Install in its place an oil pressure gauge.

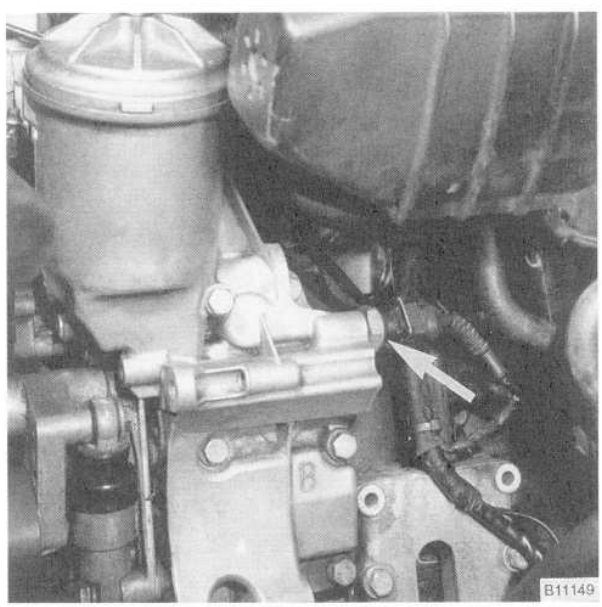

Fig. 1. Oil pressure switch location (**arrow**) on M50 engine. Switch locations vary depending on engine.

Oil pressure switch locations

- 525i, M20 engine . . . . . beneath right engine mount
- 535i, M30 engine . . . . . rear corner of engine, left side
- 525i, M50, M60 engine. . . . . oil filter housing

CAUTION —
Some oil may drain out as the oil pressure switch is removed. Use a rag to soak up any spills and install the gauge as quickly as possible.

2. With the gauge installed, start the engine and check the oil pressure. Oil pressure specifications are listed below.

NOTE —
For the most accurate test results, the engine oil should be new and of the correct grade.

Lubrication system specifications

- Oil pressure
  at idle . . . . . 0.5-2.0 bar (7-28 psi)
  at maximum engine speed . . . .4.0-5.0 bar (57-71psi)

3. If testing shows low oil pressure, one or more of the following conditions may be indicated: 1) worn or faulty oil pump 2) worn or faulty bearings or 3) severe engine wear. All of these conditions indicate the need for major repairs.

To test oil pressure warning system

When the ignition is turned on, the oil pressure warning light comes on. When the engine is started and the oil pressure rises, the oil pressure switch opens and the warning light goes out.

NOTE —
Make sure the oil level is correct before doing the tests listed below.

1. Turn the ignition switch on. The warning light on the instrument panel should light up. Remove the connector from the oil pressure switch. The light should go out and the check control should display "OIL PRESS SENSOR".

NOTE —
If the light does not go out, the wiring to the switch is most likely grounded somewhere between the switch terminal and the warning light. See **600 Electrical System—General** *for electrical wiring troubleshooting information.*

2. If the warning light does not light when the ignition is on, remove the connector from the oil pressure switch and use a jumper wire to ground the connector terminal to a clean metal surface.

NOTE —
If the warning light comes on, check the switch as described in the next step. If the warning light does not come on, the wiring circuit to the dash light or the light itself is faulty.

3. To test the switch, connect an ohmmeter between the terminal in the switch body and ground. With the engine off, there should be continuity. With the engine running, oil pressure should open the switch and there should be no continuity. Replace a faulty switch.

WARNING —
Keep in mind that low oil pressure may be preventing the switch from turning the light out. If the light remains on while the engine is running, check the oil pressure as described above. Do not operate the engine until the problem is corrected. The engine may be severely damaged.

Tightening Torque

- Oil pressure switch
  (lubricate threads) . . . . . 40 Nm (29 ft-lb)

To test oil level sensor

The oil level sensor is similar in operation to the fuel level sensor in the fuel tank. When the oil level falls below a safe level, a warning is displayed in the check control module. Check that the oil level is correct before testing the sensor.

The oil level sensor is mounted in the oil pan and contains two switches. The static switch senses the oil level when the engine is off and the ignition is on and the dynamic switch senses the level when the engine is running.

1. Disconnect the negative (–) terminal from the battery.

2. Check that the oil level is correct on the dipstick.

3. With the ignition key off, peel back the rubber boot from the main engine harness connector and then separate the connector:
   - On 525i and 535i models, the engine connector is near the left shock tower. See Fig. 2.
   - On 530i and 540i models, the connector is on the right cylinder head, beneath the top engine cover.



Fig. 2. Main harness connector being separated at bulkhead on 525i model.

4. Working at the side of the connector leading to the sensor, make the resistance checks given below. See Fig. 3. If any faults are found, the sensor should be replaced.

Oil Level Sensor Continuity Test

Test terminals	Test results
Blue/yellow wire and ground (static switch)	
correct oil level	1k ±1% ohms (switch open)
low oil level	0-0.2 ohm (switch closed)
Blue/white wire and ground (dynamic switch)	
low oil level	no continuity (switch open)

NOTE —

- *Use a new O-ring when replacing the oil level sensor.*
- *On models with the oil level sensor mounted in the bottom of the oil pan, drain the engine oil before removing the sensor.*

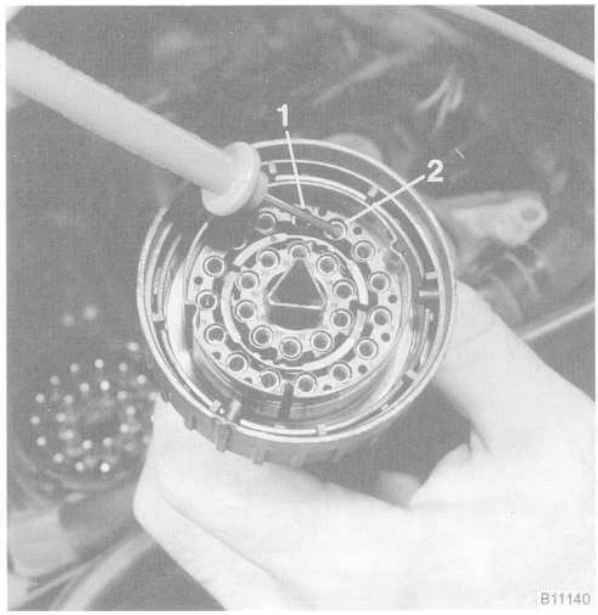

Fig. 3. Oil level sensor being tested through main harness connector. Blue/yellow wire (**1**) is for dynamic switch and blue/white wire (**2**) is for static switch.

OIL PAN

On all engines, the oil pan can be removed with the engine installed. On M30 and M60 engines, oil pan removal requires engine lifting equipment for raising the engine off its mounts.

To remove and install oil pan (M20 engine)

1. Drain the engine oil as described in **020 Maintenance Program.**
2. Disconnect the oil level sensor harness connector.
3. Remove the bellhousing reinforcement plate. See Fig. 4.
4. Remove the oil pan retaining bolts and lower the oil pan.
5. Remove the three oil pump mounting bolts that hold the pump to the engine block. Lower the pump into the pan.

> *WARNING —*
> *If the oil pan does not separate easily from the engine cylinder block, a few taps with a rubber mallet should break it free. Do not pry the oil pan loose.*

6. Withdraw the oil pan and the oil pump.



Fig. 4. Bellhousing reinforcement plate mounting bolts (**arrows**).

Installation is the reverse of removal. Thoroughly clean all the old gasket material from the mating surfaces. Position the oil pump and the oil pan onto the block and install the oil pump as described below under **Oil Pump**. Coat the mating surfaces on the timing case cover and the end cover with a non-hardening sealing compound. Tighten all oil pan bolts evenly in stages. Reconnect the oil level sensor harness connector. Fill the engine with oil as described in **020 Maintenance Program**.

Tightening Torques

- Oil pan to engine block. . . . . 10 Nm (89 in-lb)
- Oil pump to engine block . . . . . 22 Nm (16 ft-lb)

To remove and install oil pan (M30 engine)

1. Drain the engine oil as described in **020 Maintenance Program.**
2. Disconnect the oil level sensor harness connector.
3. Remove the radiator cooling fan and the fan shroud. See **170 Radiator and Cooling System**.

   NOTE —
   The radiator cooling fan nut (32 mm wrench) has left hand threads.

4. Remove the air cleaner housing from the car.
5. Remove the coolant expansion tank mounting bolts. Disconnect the overflow hose and the coolant level sensor harness connector from the expansion tank.
6. On cars with automatic transmission, remove the brackets that hold the ATF cooler lines to the oil pan and cylinder block.
7. Working from below, remove the engine splash guard.
8. Remove the bellhousing reinforcement plate. See Fig. 4.
9. Without disconnecting any fluid lines, remove the power steering pump with bracket from the engine. Support the pump from the body using stiff wire.
10. Disconnect the exhaust pipe-to-transmission support bracket.
11. Working at transmission support bracket, remove nuts holding rubber mounts to support bracket.
12. Using an engine lifting device at the front and rear engine lifting points, raise the engine just until the weight of the engine is supported.
13. Working from below, remove the engine mount retaining nuts and ground strap (if applicable). Then raise the engine as much as possible.
14. Remove the oil pan retaining bolts and lower the oil pan.

    WARNING —
    If the oil pan does not separate easily from the engine cylinder block, a few taps with a rubber mallet should break it free. Do not pry the oil pan loose.

15. Rotate the crankshaft so that no. 6 connecting rod journal is at its highest point (TDC) and withdraw the oil pan. Rotate the crankshaft as the pan is being removed, if necessary.

Installation is the reverse of removal. Thoroughly clean all the old gasket material from the mating surfaces. Coat the mating surfaces on the timing case cover and the end cover with a sealing compound. Install the oil pan using a new gasket. Tighten the oil pan mounting bolts evenly in stages. Reconnect the oil level sensor harness connector. Fill the engine with oil as described in **020 Maintenance Program**.

Tightening Torques

- Oil pan to engine block . . . . . 9-11 Nm (6.5-8 ft-lb)
- Engine motor mount bracket to motor mount . . . . . 45 Nm (33 ft-lb)

To remove and install oil pan (M50 engine)

1. Drain the engine oil as described in **020 Maintenance Program**.

2. Disconnect the oil level sensor harness connector.

3. Remove the radiator cooling fan and the fan shroud. See **170 Radiator and Cooling System**.

   NOTE —
   The radiator cooling fan nut (32 mm wrench) has left hand threads.

4. Release the drive belt tension and remove the engine drive belt. See Fig. 5.

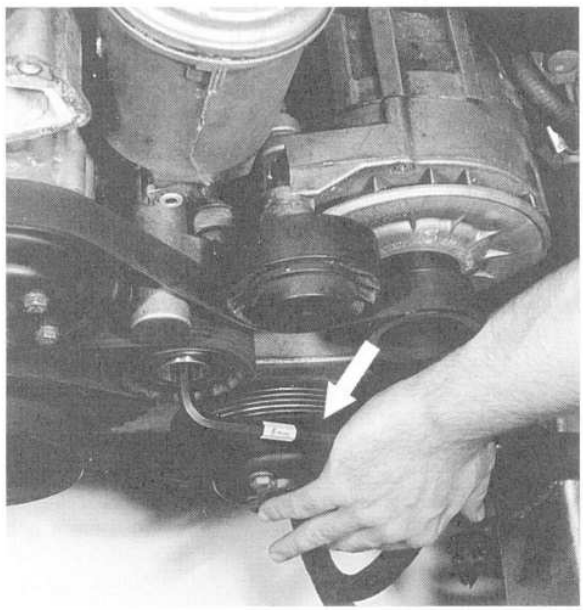

B11143

Fig. 5. To remove poly-ribbed drive belt, pry cover from front of tensioner. Then using 8mm hex key, turn tensioner clockwise (**arrow**) to release tension and slip belt off pulleys.

5. Without disconnecting any fluid lines, remove the power steering pump and its bracket from the engine block. See Fig. 6. Support the pump from the body using stiff wire.

6. Remove the oil dipstick guide tube mounting bolt and remove the tube. See Fig. 7.

   NOTE —
   The guide tube is sealed in the block using an O-ring. Check that the O-ring comes out with the tube. Use a new O-ring when installing the tube.

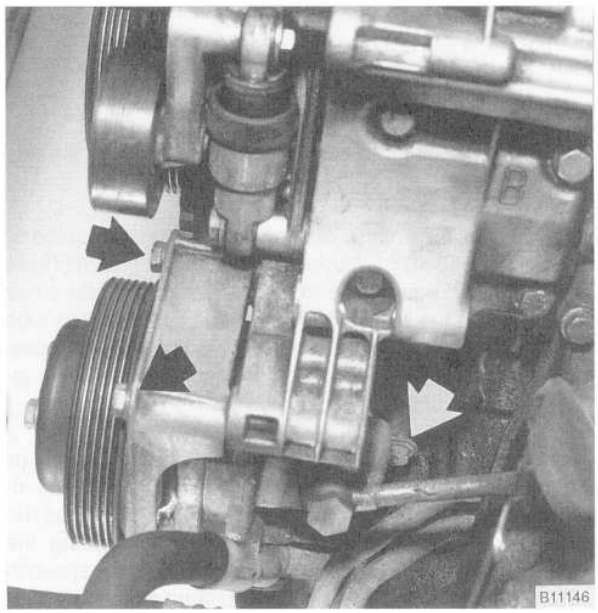

B11146

Fig. 6. Power steering pump mounting bolts (**arrows**).

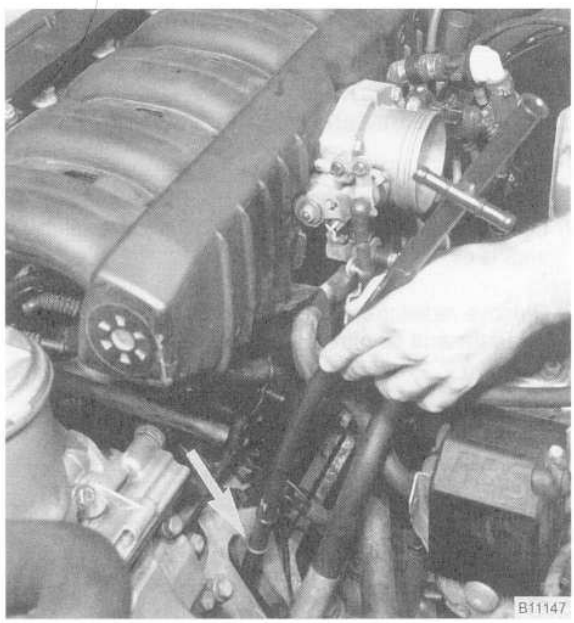

B11147

Fig. 7. Oil dipstick guide tube being removed. Use a new O-ring (**arrow**) during installation.

7. On cars with automatic transmission, remove the brackets that hold the ATF cooler lines to the oil pan and cylinder block.

8. Remove the oil pan mounting bolts and lower the oil pan to the subframe crossmember.

WARNING —
If the oil pan does not separate easily from the engine cylinder block, a few taps with a rubber mallet should break it free. Do not pry the oil pan loose.

9. Unbolt the oil pump pickup tube from the oil pump and then remove the oil pan from the rear.

Installation is the reverse of removal. When installing the oil pan, apply a bead of non-hardening sealing compound (Three Bond®1207B or equivalent) to the front and rear end cover seam areas on the block. Position the oil pump pickup tube and the oil pan onto the block and install the pickup tube using a new gasket. Be sure the tab on the gasket faces down towards the intake of the pickup tube.

Tighten the oil pan bolts evenly in stages. Reconnect the oil level sensor harness connector. Use a new O-ring when installing the dipstick guide tube. Fill the engine with oil as described in **020 Maintenance Program**. After adding the engine oil, start and run the engine. Raise the engine speed to 2,500 rpm until the oil pressure warning lamp goes out (about 5 seconds).

Tightening Torque
- Oil pan to engine block. . . . . 10 Nm (89 in-lb)

To remove and install oil pan (M60 engine)

1. Disconnect negative (–) terminal at battery.
2. Loosen oil filter cover at top of oil filter housing. Drain engine oil.
3. Remove radiator cooling fan and fan shroud. See **170 Radiator and Cooling System**.

NOTE —
The radiator cooling fan nut (32 mm wrench) has left hand threads.

4. Remove oil dipstick guide tube completely.

NOTE —
The guide tube is sealed in the oil pan using an O-ring. Check that the O-ring comes out with the tube. Use a new O-ring when installing the tube. Also note the "top" marking on the guide tube clamping bracket during installation.

CAUTION —
Do not reuse the nut at the guide tube clamping bracket. It is a single-use nut and should be replaced.

5. Remove engine and transmission splash pans from beneath car.
6. Disconnect harness connector at oil level sensor.
7. Remove oil pan lower section. See Fig. 8.

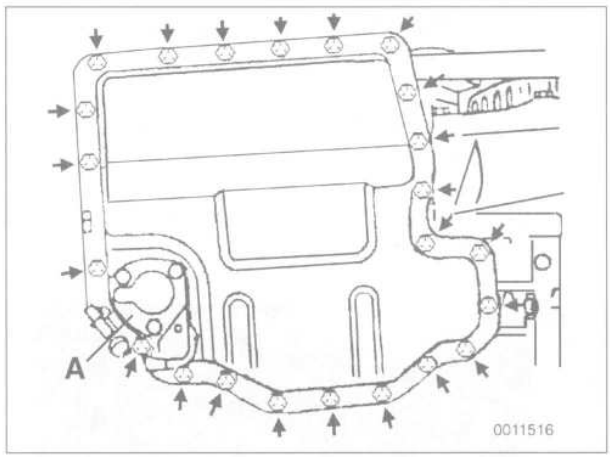

Fig. 8. Oil pan lower section mounting bolts (**arrows**) on M60 engine. Oil level sensor shown at **A**.

8. Remove the engine drive belt. See **020 Maintenance Program**.
9. Without disconnecting any fluid lines, remove power steering pump and its bracket from engine block. Support the pump from the body using stiff wire.
10. Using an engine lifting device at front and rear engine lifting points, raise engine with lifting equipment and support engine.
11. Remove engine mount retaining nuts and ground strap from left and right mounts.
12. Remove ATF cooler line brackets from oil pan and cylinder block.
13. Raise engine off mounts as much as possible with lifting equipment.
14. Remove center nut at oil pump sprocket and remove sprocket from pump. Remove oil pump mounting bolt and nuts and remove oil pump. See Fig. 9.

CAUTION —
Do not reuse the oil pump mounting nuts. They are single-use nuts and should be replaced.

15. Remove oil pump pipes from engine block. See **Oil Pump**.
16. Remove oil return line fitting (banjo bolt) at top of oil pan.

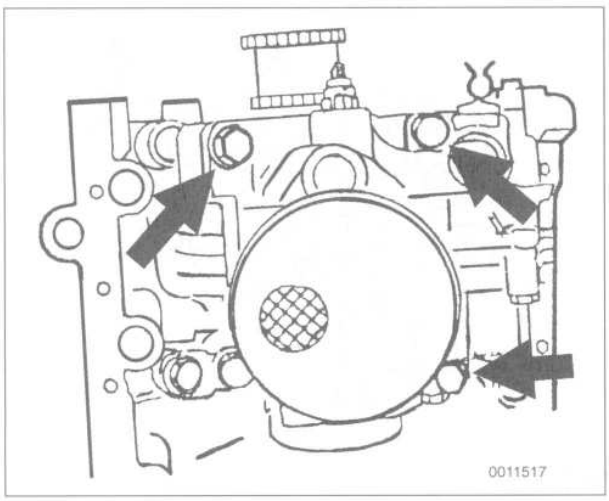

Fig. 9. Oil pump mounting bolt and nuts (**arrows**) on M60 engine. Oil pump drive sprocket shown removed.

17. Remove bolts from upper oil pan and lower oil pan.

> ***CAUTION —***
> *If the oil pan does not separate easily from the cylinder block, a few taps with a rubber mallet should break it free. Do not pry the oil pan loose.*

Installation is the reverse of removal. When installing the upper oil pan, apply a bead of non-hardening sealing compound (Three Bond®1207B or equivalent) to the front and rear end cover seam areas on the block. Install the oil pump pipes using new O-rings. Install the oil pump and tension the drive chain as described below under **Oil Pump**.

> ***NOTE —***
> *When mounting the oil pans, note that the longer M6 bolts (20 mm) are used in the upper pan and the slightly shorter M6 bolts (18 mm) are used in the lower pan.*

Reconnect the oil level sensor harness connector. Use a new O-ring when installing the dipstick guide tube. Reinstall the ground wire at the engine mount. Fill the engine with oil as described in **020 Maintenance Program**.

Tightening Torques

- Engine mount to mount carrier..... 47 Nm (35 ft-lb)
- Oil pan to engine block
  M6 bolt ..... 10 Nm (89 in-lb)
- Oil pump sprocket to pump shaft .... 47 Nm (35 ft-lb)
- Oil pump to engine block
  (use new nuts) ..... 22 Nm (17 ft-lb)
- Oil return line to oil pan
  (banjo bolt)..... 30 Nm (22 ft-lb)

OIL PUMP

The oil pump is mounted to the bottom of the cylinder block inside the engine oil pan. When the engine is running, oil is drawn from the oil pan by the oil pump's pickup tube and circulated through the engine.

To remove and install oil pump

1. Remove the oil pan as described earlier.

2. On M30, M50 and M60 engines, remove the oil pump sprocket mounting nut. See Fig. 10. Lift the sprocket off together with the drive chain.

> ***NOTE —***
> *On M50 engines, the oil pump sprocket nut has left hand threads.*

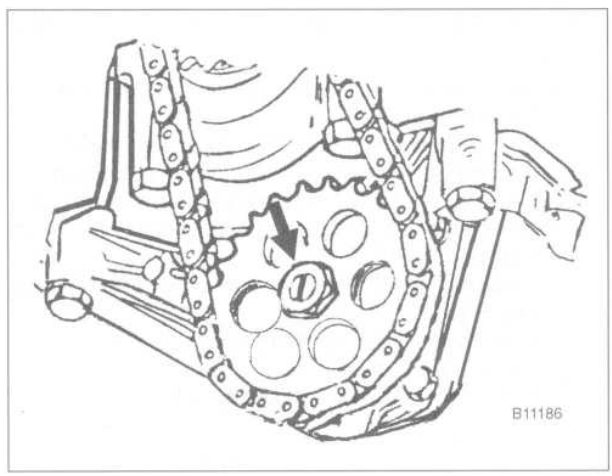

Fig. 10. Oil pump sprocket mounting nut on M50 engine. Oil pump sprocket on M30 and M60 engine is similar.

3. Remove the oil pump mounting bolts and withdraw the pump. Note any spacers between pump and engine block.

4. On M60 engines, remove the two oil pipes from the engine block. Inspect the O-rings on the pipes and replace if crushed or deformed. See Fig. 11.

5. Remove the oil pump cover and check for wear or scoring. Spin the oil pump shaft and check that the gears turn smoothly. If the gears spin with difficulty or any wear is present, the pump should be replaced.

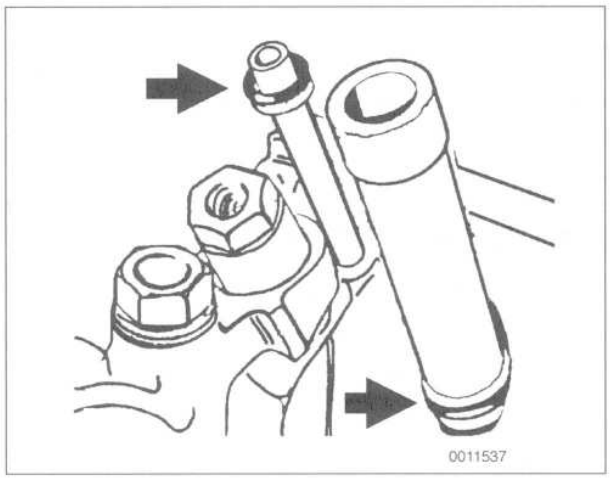

Fig. 11. Oil pipes on M60 engine. Inspect O-rings (**arrows**) and replace as necessary.

6. Installation is the reverse of removal, noting the following:
   - Align sprocket splines to oil pump shaft splines before tightening sprocket nut.
   - M50 engines: check that oil pump locating dowels are correctly positioned in block before installing pump.
   - M60 engines: Before installing pump, install oil pipes into the block. Turn threaded spacer on pump fully to stop. See Fig 12.
     Install pump and tighten two nuts on left side of pump. See Fig. 13.
     Adjust chain slack by turning spacer using hex wrench. See Fig. 14.
     Install and tighten final mounting bolt.

Tightening Torques

- Oil pump to engine block . . . . . 22 Nm (16 ft-lb)
- Oil pump sprocket to oil pump shaft
  M30 engine . . . . . 25 Nm (18 ft-lb)
  M50 engine (left-hand thread). . . . . 25 Nm (18 ft-lb)
  M60 engine . . . . . 47 Nm (35 ft-lb)

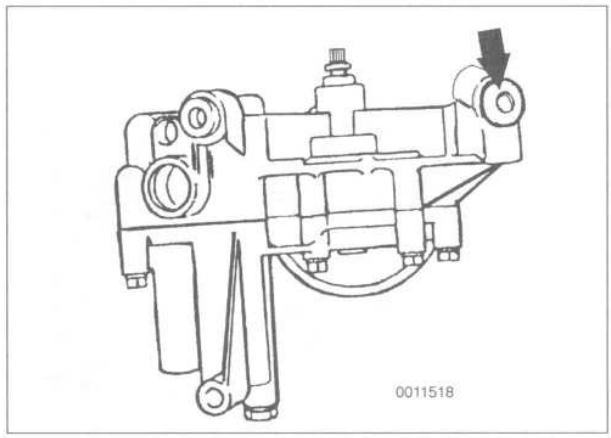

Fig. 12. Before installing oil pump on M60 motor, turn threaded spacer (**arrow**) to stop.

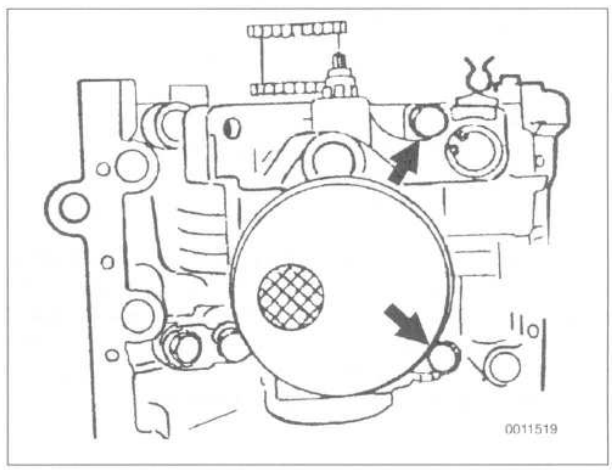

Fig. 13. Tighten oil pump mounting nuts (**arrows**) before adjusting chain slack.

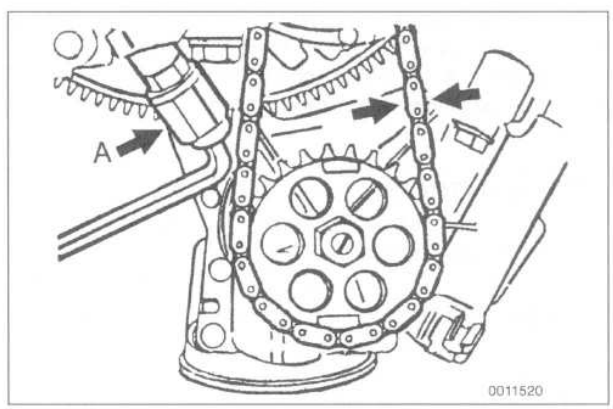

Fig. 14. Adjust chain slack by turning threaded spacer (**A**).

120 Ignition System—DME

GENERAL 120-1
Disabling Ignition System 120-2
Warnings and Cautions. 120-2

TROUBLESHOOTING 120-3
Basic Troubleshooting Principles 120-3
To check for spark (M20/M30 engines only) . . . 120-3

IGNITION SYSTEM SERVICE 120-3
To test ignition coil, cap, rotor, and wires (M20/M30 engines) 120-3
Distributor Cap, Rotor, and Spark Plug Wires, Replacing (M20/M30 engine) 120-4
To test ignition coil (M50/M60 engines) 120-5
Testing crankshaft position/rpm sensor 120-5
Ignition Firing Order 120-6
Knock Sensors. 120-6

IGNITION SYSTEM CIRCUIT SCHEMATICS 120-7

TABLES

a. Ignition System Resistance Specifications (M20/M30 engines) 120-4
b. Ignition System Resistance Specifications (M50/M60 engines) 120-6

GENERAL

This repair group covers troubleshooting and testing of the ignition specific components of the DME engine management system. Additional DME troubleshooting and testing is covered in **130 Fuel Injection—DME**.

The DME engine management system (also known as Motronic) controls both the fuel and the ignition functions through a single electronic control module (ECM). Various versions of DME are used on the cars covered by this manual.

NOTE —

- *Spark plug replacement is covered in* **020 Maintenance Program**.
- *All of the information in this repair group labeled "Motronic" or "DME" applies to all versions, unless specifically noted otherwise.*

DME Engine Management Systems

- 525i
  1989-1990 (M20 engine) . . . . . DME 1.3
  1991-1992 (M50 engine) . . . . . DME 3.1
  1993-1995 (M50TU engine) . . . . . DME 3.3.1
- 535i (M30 engine) . . . . . DME 1.3
- 530i/540i (M60 engine) . . . . . DME 3.3

Ignition timing is electronically controlled and not adjustable. The DME control module uses engine load, engine speed, coolant temperature, and intake air temperature as the basic inputs for timing control. On cars with DME 3.3 and DME 3.3.1, knock detection is also an input to the DME control module.

The initial ignition point is determined by the crankshaft position/rpm sensor during cranking. Once the engine is running, timing is continually adjusted based on operating conditions. Fig. 1 shows a DME ignition characteristic map. A map similar to the one shown is digitally stored in the Motronic control module.

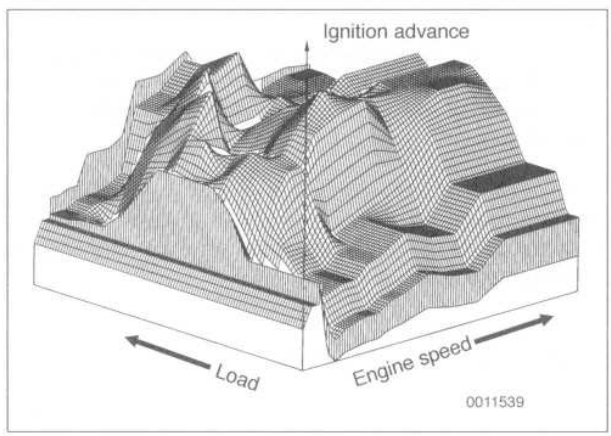

Fig. 1. Motronic ignition characteristic map.

WARNING —
The ignition system is a high-energy system operating in a dangerous voltage range that could prove to be fatal if exposed terminals or live parts are contacted. Use extreme caution when working on a car with the ignition on or the engine running.

On M20 and M30 engines, a distributor cap is mounted to the front of the cylinder head and the ignition rotor is driven directly off the front of the camshaft. The only function the distributor serves is to distribute high voltage to the spark plugs. There are no adjustments that can be made. See Fig. 2.

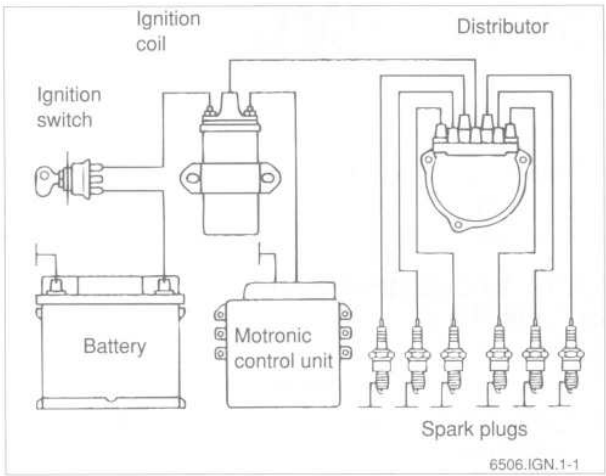

Fig. 2. Ignition system for Motronic 1.3 systems.

On M50 and M60 engines, a direct ignition system is used—there is no distributor cap or ignition rotor. Individual coils are mounted directly above each spark plug. Each coil can be selectively controlled by the DME control module on a cylinder-by-cylinder basis. On 1993 and later M50 engines and M60 engines, the DME system also incorporates knock sensors to monitor and control ignition knock or ping.

Disabling Ignition System

The ignition system operates in a lethal voltage range and should therefore be disabled any time service or repair work is being done on the engine that requires the ignition to be switched on.

The DME engine management system can be disabled by removing the fuel pump relay and the DME main relay. The relays are located in the E-box in the right rear of the engine compartment. See Fig. 3.

Warnings and Cautions

The DME system contains sensitive electronic components. To protect the system and for general safety, the following warnings and cautions should be observed during ignition system troubleshooting, maintenance, or repair work.

WARNING —

- *Do not touch or disconnect any of the high tension cables at the coil, distributor, or spark plugs while the engine is running or being cranked by the starter. Fatal voltages are present.*
- *Before operating the starter without starting the engine (for example when making a compression test) always disable the ignition. See* **Disabling Ignition System**.

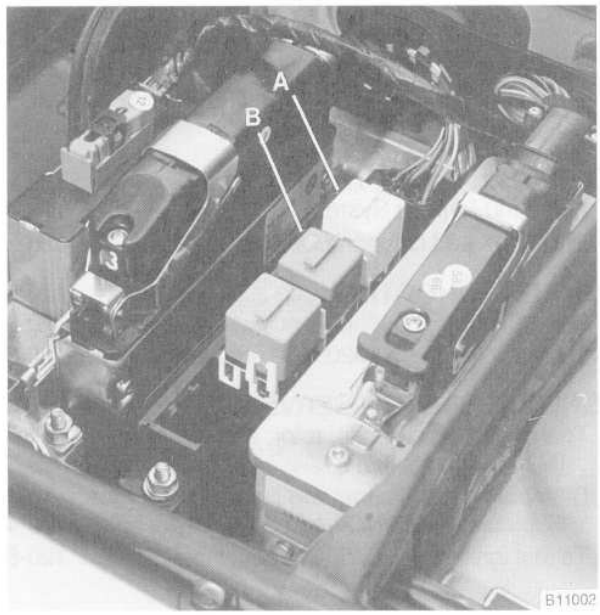

Fig. 3. DME main relay (**A**) and fuel pump relay (**B**) in right rear of engine compartment (E-Box). M50 engine shown, other engines are similar.

CAUTION —

- *Connect or disconnect ignition system wires, multiple connectors, and ignition test equipment leads only while the ignition is off. Switch multimeter functions or measurement ranges only with the test probes disconnected.*
- *On M20 and M30 engines, do not disconnect terminal 4 (center terminal) from the coil or remove the distributor cap to disable the ignition.*
- *Do not disconnect the battery while the engine is running.*
- *Many of the tests of ignition system components require the use of high-impedance test equipment to prevent damage to the electrical components. A high impedance digital multimeter should be used for all voltage and resistance tests. An LED test light should be used in place of an incandescent-type test lamp.*
- *Do not connect test instruments with a 12-volt supply to terminal 15 (+) of the ignition coil. The voltage backflow can damage the DME control module. In general, make test connections only as specified by BMW, as described in this manual, or as described by the instrument's manufacturer.*

TROUBLESHOOTING

Poor driveability may have a variety of causes. The fault may lie with the ignition system, the fuel system, parts of the emission control system, or a combination of the three. Because of the interrelated functions of these systems and their effects on each other, it is often difficult to know where to begin looking for problems. For this reason, effective troubleshooting should always begin with an interrogation of the On-Board Diagnostic (OBD) system. See **100 Engine–General**.

NOTE —

- *The OBD system detects and stores coded fault information for emissions-related malfunctions. The fault codes can be "read out" using BMW special service equipment or alternatively via flashes (blink codes) from the Check Engine light in the instrument cluster. This procedure is described in* **100 Engine—General**.

Basic Troubleshooting Principles

An engine that starts and runs indicates that the ignition system is fundamentally working—delivering voltage to the spark plugs. A hard-starting or poor-running engine, however, may indicate a problem with how well the spark is delivered. A faulty coil(s), cracked or deteriorated spark plug wires, a worn or cracked distributor cap or rotor, and worn or fouled spark plugs are all causes of reduced spark intensity and inefficient combustion.

WARNING —

Inefficient combustion (rich air/fuel mixture) can cause the catalytic converter to overheat and plug. An overheated catalytic converter can also be a fire hazard.

To check for spark (M20/M30 engines only)

On engines with distributor ignition, the most fundamental step in troubleshooting a no-start condition is to determine if the spark plugs are making spark. The battery should be fully charged when making the test.

NOTE —

On M50 and M60 engines with individual coils, checking for spark is difficult. Try removing the plugs and inspecting for differences between them. A non- or poor-firing plug can either be wet with fuel and/or black and sooty. Note that on late cars the fuel injector will be electrically disabled if a faulty coil is detected.

1. Turn the ignition off and remove a connector from one of the spark plugs. Connect it to a known good spark plug, preferably a new plug.

WARNING —

Do not hold the spark plug or its connector, even if using insulated pliers. The ignition system is a high-energy system operating in a dangerous voltage range which could prove to be fatal if exposed terminals or live parts are contacted.

2. Position the plug so that the outer electrode is grounded on the engine.

CAUTION —

Any test set-up other than the one described above may cause damage or inconclusive tests.

3. While a helper briefly actuates the starter, look and listen for a spark.

NOTE —

A bright blue spark indicates a good spark. A yellow-orange spark indicates a weak spark. Test the coil, the spark plug wires, the distributor cap and rotor and replace any faulty components found. If there is no spark, begin by testing the crankshaft position/rpm sensor.

WARNING —

- *If ignition system failure is not the problem, the engine may start during this test. Be prepared to turn off the ignition immediately. Running the engine with a spark plug wire disconnected may damage the catalytic converter.*

IGNITION SYSTEM SERVICE

To test ignition coil, cap, rotor, and wires (M20/M30 engines)

1. Connect a voltmeter between terminal 15 (+) of the ignition coil and ground, see Fig. 4. Turn the ignition on and check for voltage.
   - If battery voltage is not present, check the wire between terminal 15 and the ignition switch. See **Electrical Wiring Diagrams**.

CAUTION —

The wiring to terminal 15 (+) of the coil (via the ignition switch) is not fused. Use care when testing this circuit.

2. Label and remove the wiring from the coil. Use an ohmmeter to test the coil primary and secondary circuits. Resistance values are listed in **Table a**.

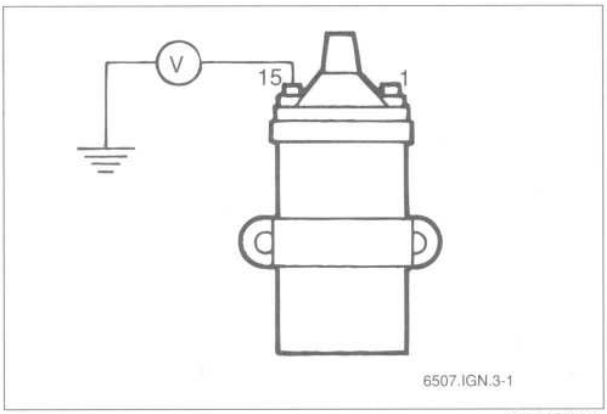

6507.IGN.3-1

Fig. 4. Check for battery voltage at coil between terminal 15 and ground with ignition key on.

Table a. Ignition System Resistance Specifications (M20/M30 engines)

	Terminals	Resistance
Coil primary	1 (–) and 15 (+)	0.50 kΩ ±10%
Coil secondary	15 (+) and 4 (center tower)	6.0 kΩ ±10%
Spark plug ends	—	5.0 ± 1.0 kΩ
Spark plug wires	—	0 Ω (approx.)
Distributor cap suppression connectors	—	1.0 ± 0.2 kΩ
Rotor	—	1.0 kΩ

3. Inspect the coil housing for hairline cracks or leaks. If any faults are found, the coil should be replaced.

4. Check the resistance of the spark plug end connectors as well as the individual wires. Wires or connectors with too much resistance should be replaced. Check for corrosion at the connections. Resistance values are listed in **Table a**.

5. Remove the distributor cap and check the condition of the ignition rotor. See **Table a** for rotor resistance values.

6. Check the resistance of the removed distributor cap between the tower and its matching contact inside of the cap. The resistance should be nearly zero ohms.

7. Replace any faulty components found.

NOTE —

On models with Motronic 1.3, a failed DME control module can sometimes damage the ignition coil. Be sure to check the ignition coil anytime a faulty DME 1.3 control module is replaced and a no-start condition still exists.

NOTE —

- *On M20 engines, check for excessive oil residue in the distributor cap or on the rotor. If any signs of oil residue are present, the camshaft oil seal may be leaking and should be replaced.*
- *Spark plug wire ends are available individually through an authorized BMW dealer parts department.*

Distributor Cap, Rotor, and Spark Plug Wires, Replacing (M20/M30 engine)

BMW does not specify a replacement interval for the distributor cap and rotor. Worn and corroded contacts or poor insulation that allows the spark to short to ground are the primary reasons for replacement of these components.

Each spark plug wire leads from a specific terminal on the distributor cap to a specific spark plug. A cylinder number label should be attached to each spark plug wire.

NOTE —

To facilitate easier removal of the cap and rotor, it is recommended that the radiator cooling fan and fan shroud first be removed as described. See **170 Radiator and Cooling System**.

The distributor cap is held in place with three screws. See Fig. 5. Carefully remove the plastic shield from the cap and then loosen the captive screws. Leave the spark plug wires in the old cap. Mount the new cap and tighten the screws. Change over one wire at a time from the old cap to the new one.



6212

Fig. 5. Distributor cap mounting screws (**arrows**).

NOTE —

Spark plug wires must be installed so that the spark plugs fire in the following order: 1-5-3-6-2-4. The rotor turns in a clockwise direction when viewed from the front and cylinder no. 1 is at the front of the engine.

To remove the rotor mounting screws use a 3mm allen wrench.

On M20 engines, remove the dust shield and inspect the large O-ring on the rear of the shield. See Fig. 6. If the O-ring is crushed or damaged, it should be replaced. Installation of the rotor and cap is the reverse of removal. Do not over tighten the rotor mounting screws.

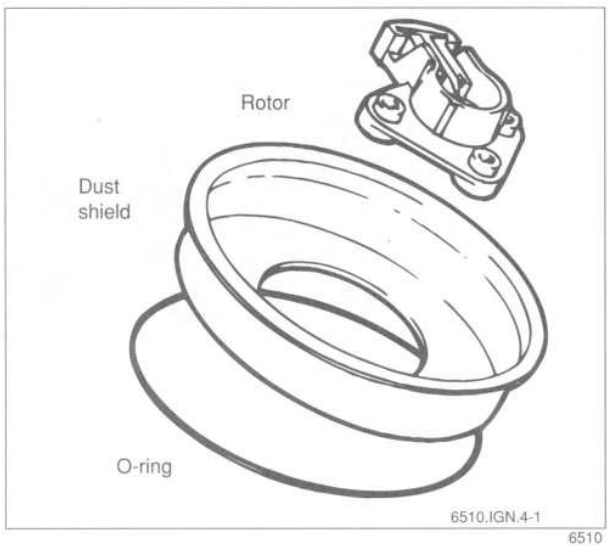

Fig. 6. Ignition rotor, distributor cap dust shield and O-ring on M20 engine.

Tightening Torque

- Ignition rotor to rotor adaptor. . . . . 2.8±0.2 Nm (25±1.8 in-lb)

NOTE —

The inductive pickup (cylinder identification sensor) on the spark plug wire is used to sequence the fuel injectors. See **130 Fuel Injection–DME**.

To test ignition coil (M50/M60 engines)

1. Remove the plastic engine cover(s) from the top of the engine by prying off the nut covers and removing the cover mounting nuts.

2. Disconnect the harness connector from the coil. Connect a voltmeter between terminal 15 (+) in the harness connector and ground. See Fig. 7. Turn the ignition on and check for battery voltage.
   - If battery voltage is not present, check the wire between terminal 15 and the ignition switch. See **Electrical Wiring Diagrams**.

3. Turn the ignition off.

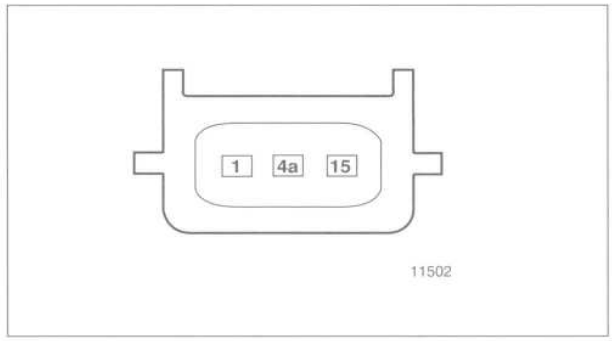

Fig. 7. Ignition coil harness connector terminal identification for M50 and M60 engines.

CAUTION —

The wiring to terminal 15 of the coil (via the ignition switch) is not fuse protected. Use care when testing this circuit.

4. Use an ohmmeter to test the coil primary. Resistance values are listed in **Table b**.

Table b. Ignition Coil Resistance (M50/M60 engines)

	Terminals	Resistance
Coil primary	1 (–) and 15 (+)	0.4-0.8 Ω
Coil secondary	N.A.	N.A.

5. Remove the coil and inspect the coil housing for hairline cracks or leaking casting material. If any faults are found, the coil should be replaced.

NOTE —

On "May and Christe" manufactured coils, check carefully for thermal stress cracks or signs of leaking casting material. If any of these faults are found, the coil should be replaced before it causes damage to the DME ECM.

Testing crankshaft position/rpm sensor

The crankshaft position/rpm sensor is mounted to the front of the engine and reads a toothed wheel on the front of the crankshaft. Engine speed is determined by the rate at which the wheel's teeth pass the sensor. Crankshaft position is determined by the missing-teeth gap on the pulse wheel. If the DME control module does not receive a crankshaft position signal during cranking the engine will not start.

1. Disconnect the sensor harness connector.

2. Using an ohmmeter, check the resistance between the terminals 1 and 2 in the sensor end of the connector. See Fig. 8.

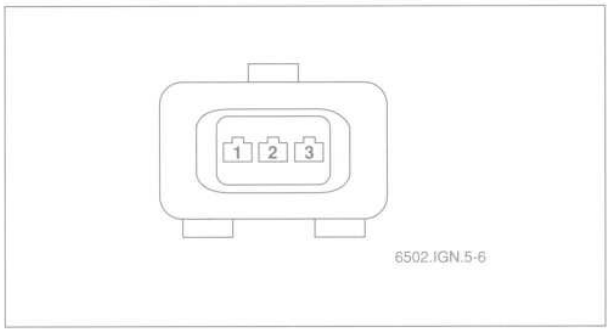

Fig. 8. Crankshaft position/rpm sensor connector (**arrow**).

Crankshaft position/rpm sensor specifications

- Coil resistance (approx.) terminals 1 and 2
  M20/M30 engines . . . . . 540 ± 10% ohms
  M50/M60 engines . . . . . 1280 ± 10% ohms
- Air gap (sensor distance from toothed wheel) . . . . . 1.0 ± 0.3 mm (0.04 ± 0.01 in.)

3. If the resistance is not correct, the sensor is faulty and should be replaced.

NOTE —

To replace a faulty sensor, remove the sensor mounting bolt using a 5 mm hex wrench. Cut wire ties as necessary to the remove wiring. When installing the new sensor, be sure the wiring is rerouted in the same orientation. Secure the sensor using new wire ties.

Tightening Torque

- Crankshaft position/rpm sensor to mounting bracket . . . . . 7 ± 1 Nm (62 ± 9 in-lb)

Ignition Firing Order

On M20 and M30 engines, spark plug wires must be installed so that the spark plugs fire in a specified order. The rotor turns in a clockwise direction when viewed from the front with the cap removed. Fig. 9 shows the correct routing of the spark plugs wires in the distributor cap.

NOTE —

- *On 6-cylinder engines, cylinder no. 1 is at the front of the engine.*
- *On 8-cylinder engines, cylinder no. 1 is at the front of the engine on the right-hand cylinder head.*

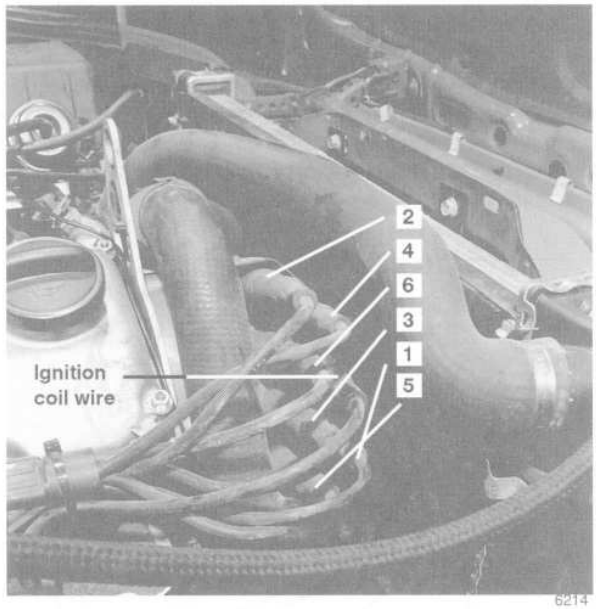

Fig. 9. Spark plugs wires correctly installed in distributor cap (M20/M30 engines).

Ignition Firing Order

- M20, M30, M50 engines 1-5-3-6-2-4
- M60 engines 1-5-4-8-6-3-7-2

Knock Sensors

Knock sensors are used on DME 3.3 and later engine management systems. M50 engines use two knock sensors and the M60 engines use four sensors. The knock sensors are bolted to the cylinder block and monitor the combustion chamber for engine-damaging knock. If knock is detected, the ignition point is retarded accordingly via the DME control module. On M50 engines, the knock sensors are accessible after removing the top engine covers. On M60 engines, access to the knock sensor requires removal of the intake manifold.

CAUTION —

On DME 3.3 and 3.3.1 engines, do not interchange the knock sensor harness connectors. Serious engine damage may result if the sensors are monitoring the wrong cylinders. If the connectors need to be removed, be sure to label them before disconnecting.

NOTE —

- *Knock sensor function is monitored by the On-board diagnostic system. If a knock sensor is detected to be faulty, an appropriate diagnostic trouble code (DTC) may be stored in memory. See* **100 Engine—General** *for information on retrieving DTCs.*
- *On M60 engines, intake manifold removal procedures are described as part of cylinder head removal in* **113 Cylinder Head Removal and Installation**.

IGNITION SYSTEM CIRCUIT SCHEMATICS

Fig. 10 through Fig. 13 show DME ignition system electrical schematics. Additional electrical circuits, can be found at the rear of this manual under **Electrical Wiring Diagrams**.

WARNING —
Do not touch or disconnect any of the high tension cables from the coil, distributor, or spark plugs while the engine is running or being cranked by the starter. Fatal voltages are present.

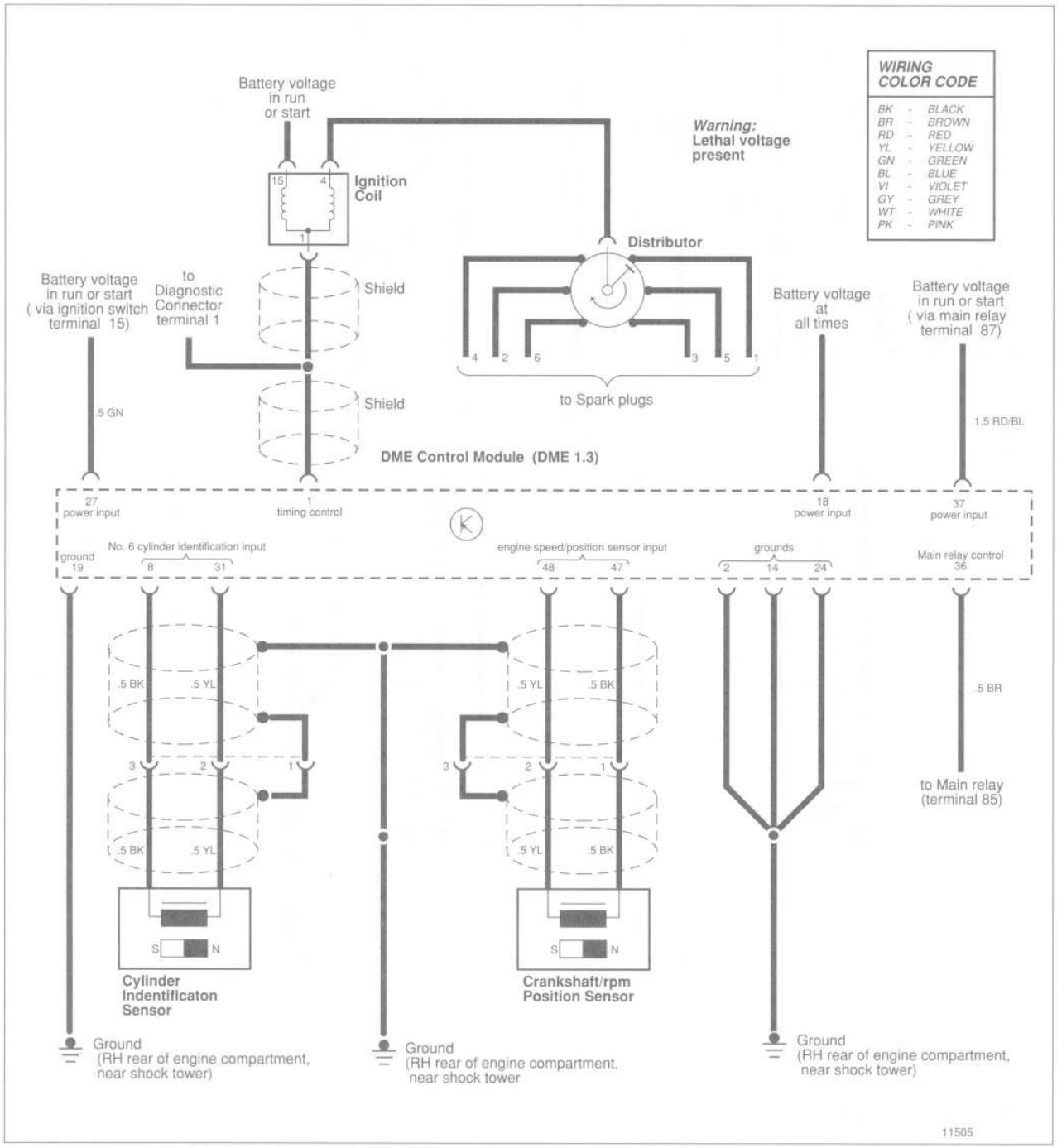

Fig. 10. DME ignition system circuit for 1989-1990 525i and 1989-1993 535i models (DME 1.3).

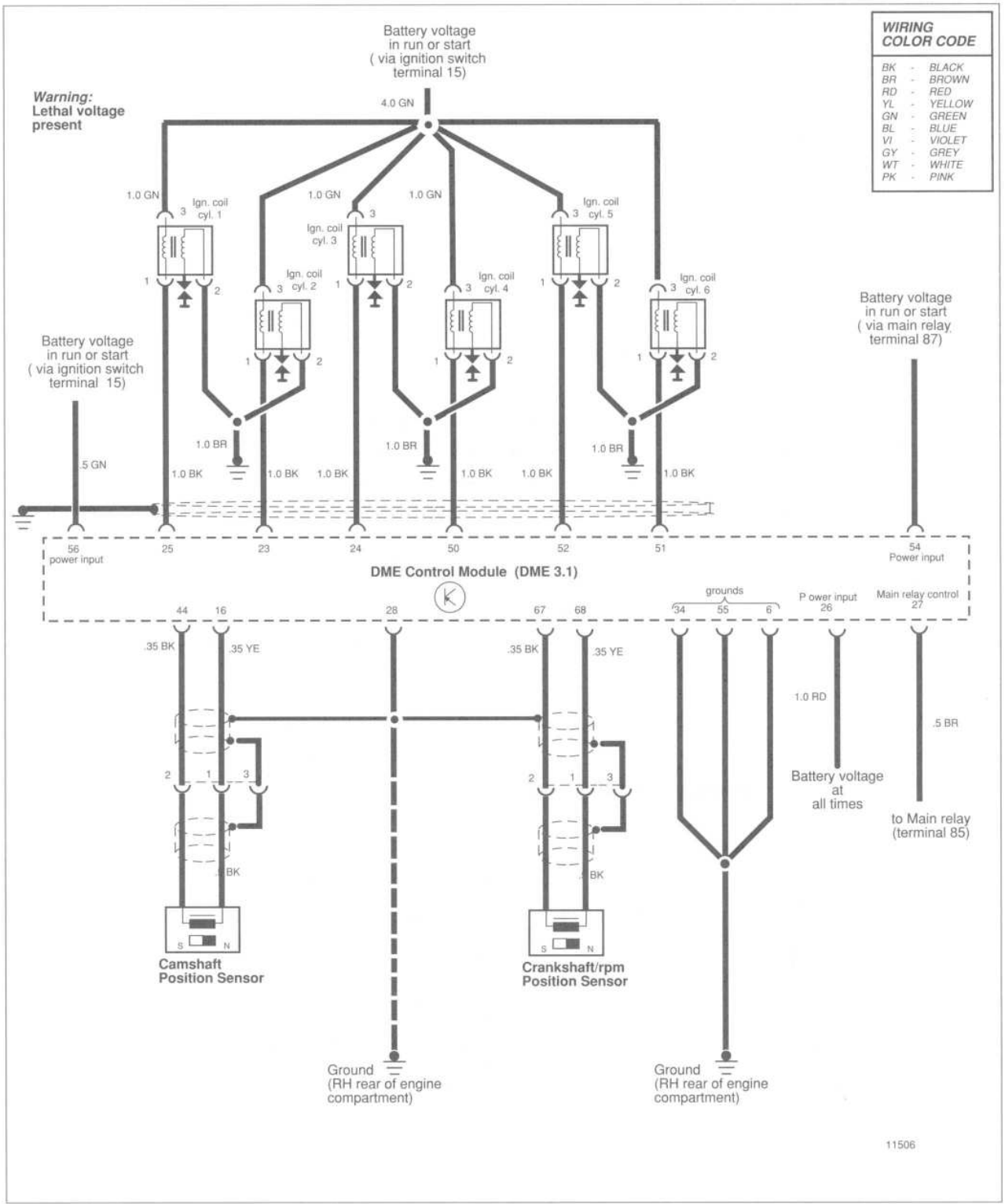

Fig. 11. DME ignition system circuit for 1991 and 1992 525i models (DME 3.1).

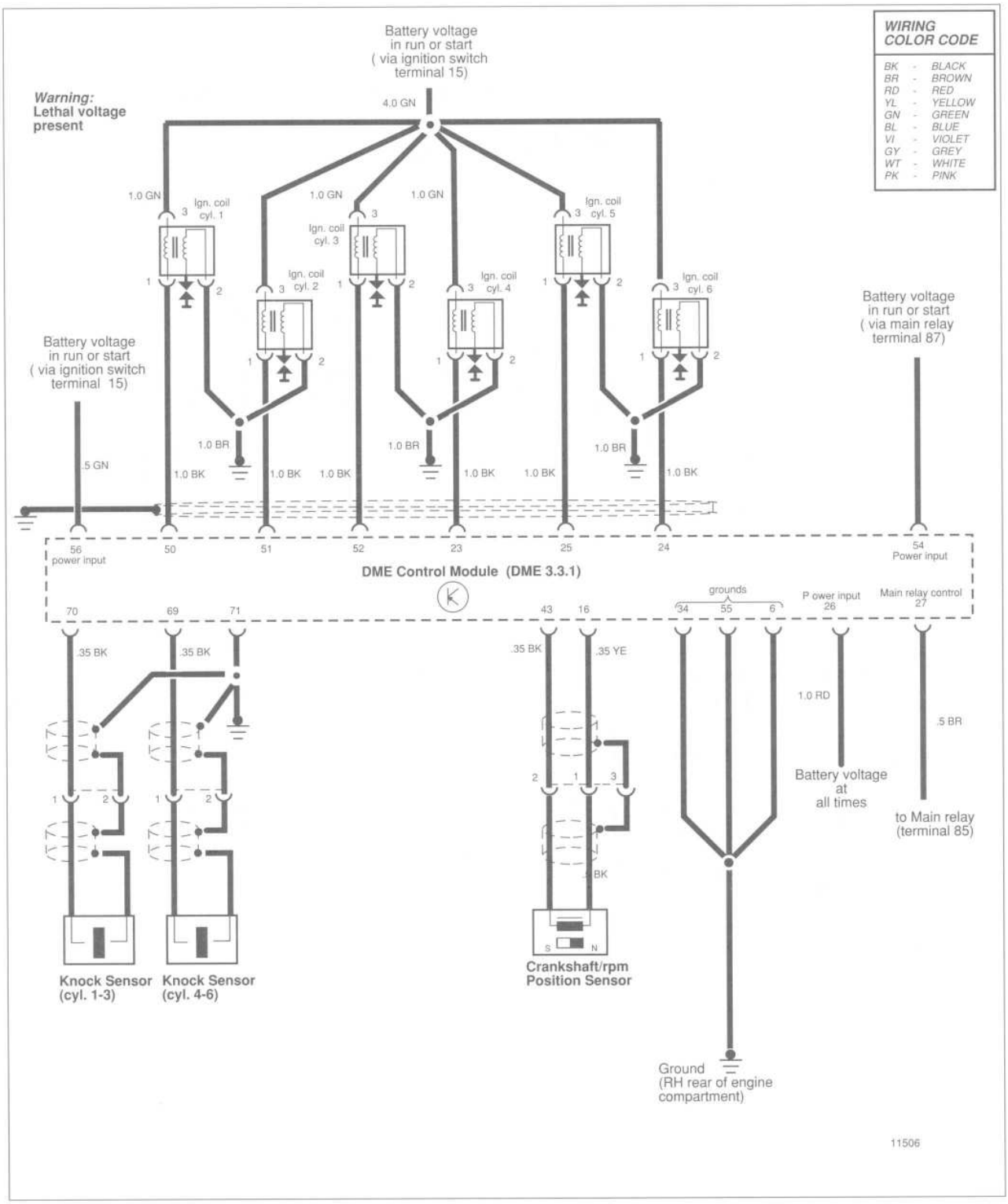

Fig. 12. DME ignition system circuit for 1993 and later 525i models (DME 3.3.1).

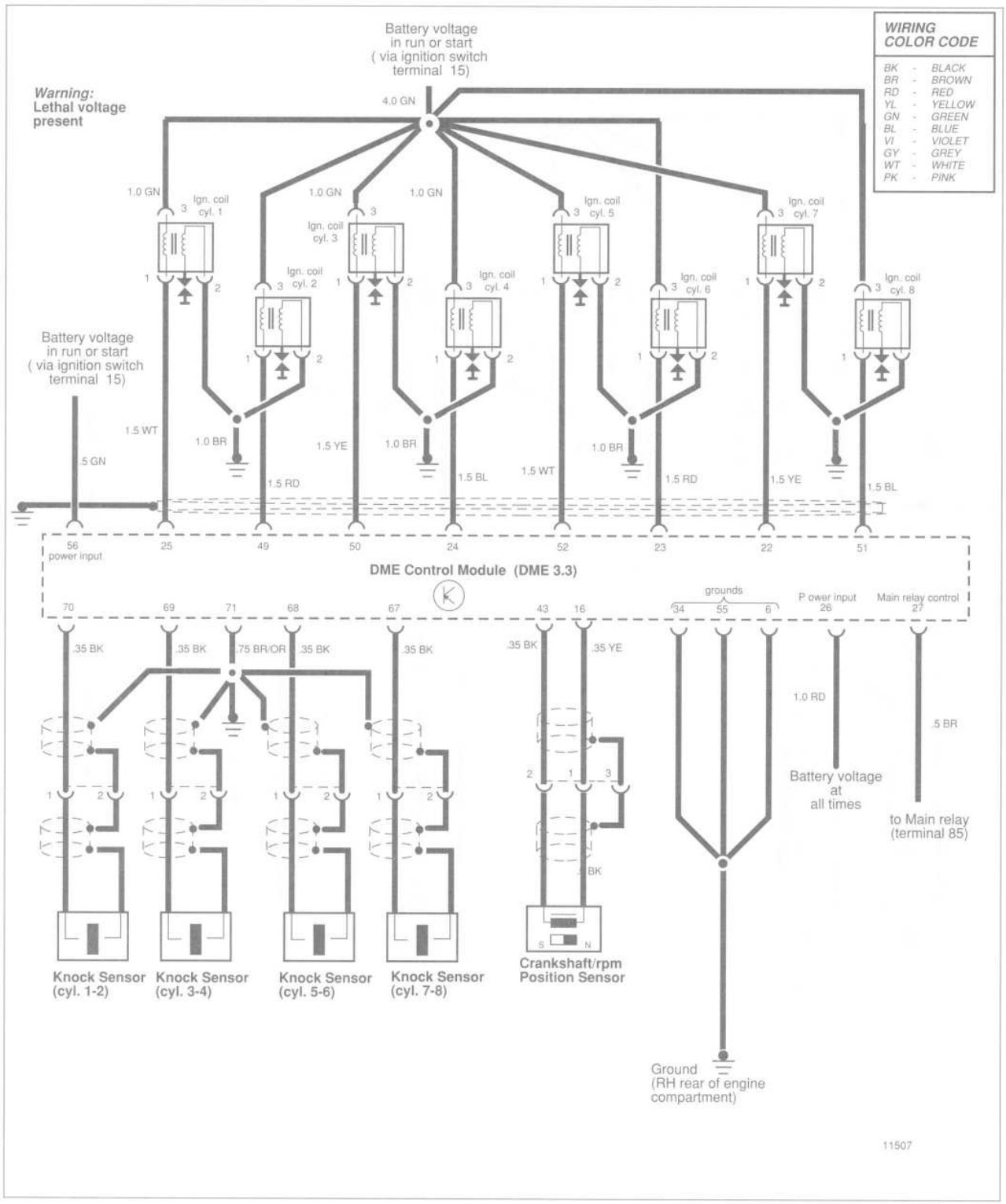

Fig. 13. DME ignition system circuit for 530i and 540i models (DME 3.3).

121 Battery, Starter, Alternator

GENERAL 121-1

CHARGING SYSTEM TROUBLESHOOTING 121-1
Charging System Quick-Check 121-1
To check static current draw 121-2
Battery Open-Circuit Voltage Test 121-2
Battery Load Voltage Test 121-2

STARTER TROUBLESHOOTING 121-2

BATTERY CHARGING 121-3

ALTERNATOR SERVICE 121-3
To check charging system 121-3
To remove and install alternator 121-4
To remove and install voltage regulator 121-5
To inspect and replace brushes 121-5

STARTER SERVICE 121-6
To remove and install starter (M20, M30, M50 engines) 121-6
To remove and install starter (M60 engine) 121-6
To remove and install solenoid switch 121-6

TABLES
a. Open-Circuit Voltage and Battery Charge 121-2
b. Battery Load Test–Minimum Voltage 121-2

GENERAL

The charging system consists of a belt-driven alternator with integral voltage regulator and a battery.

Various alternators, voltage regulators, starters, and batteries are used in the E34 5-series cars. It is important to replace components according to the original equipment specification. Check with an authorized BMW dealer for specific application and parts information.

WARNING —

- *Wear goggles, rubber gloves, and a rubber apron when working around batteries and battery acid (electrolyte). Battery acid contains sulfuric acid and can cause skin irritation and burning. If acid is spilled on your skin or clothing, flush the area at once with large quantities of water. If electrolyte gets into your eyes, flush them with large quantities of clean water for several minutes and call a physician.*
- *Batteries that are being charged or are fully charged give off explosive hydrogen gas. Keep sparks and open flames away. Do not smoke.*

CAUTION —

- *Always disconnect the negative (–) battery cable first and reconnect it last. Cover the battery post with an insulating material whenever the terminal is removed.*
- *Never reverse the battery terminals. Even a momentary wrong connection can damage the alternator or electrical components. If the polarity markings on the battery are not visible, confirm the polarity of the battery using a voltmeter.*

CHARGING SYSTEM TROUBLESHOOTING

Charging system diagnostics requires special test equipment. If the test equipment is not available, charging system fault diagnosis can be performed by an authorized BMW dealer or other qualified repair shop.

Charging System Quick-Check

As a quick-check, use a voltmeter to measure voltage across the battery terminals with the key off and then again with the engine running. The battery voltage should be about 12.6 volts with key off and approximately 14.0 volts with the engine running. If the voltage does not increase when the engine is running, there is a fault in the charging system.

NOTE —

The regulated voltage (engine running) should be between 13.8 and 14.8, depending on temperature and operating conditions. If the voltage is higher than 14.8 volts, the voltage regulator is most likely faulty.

Check for clean and tight battery cables. Check the ground cable running from the negative (–) battery terminal to the chassis and the ground cable running from the engine to the chassis. Check the alternator drive belt for looseness or wear.

NOTE —

Battery location varies depending on model and model year. On 1989-1991 525i models, the battery is mounted in the engine compartment. On 1992 and later 525i models and all 530i, 535i and 540i models, the battery is mounted beneath the rear seat.

To check static current draw

If the battery discharges over time, there may be a constant drain or current draw on the battery. A small static drain on the battery is normal, but a large drain will cause the battery to quickly discharge. Make a static current draw test as the first step when experiencing battery discharge.

1. Make sure ignition and all electrical accessories are switched off.
2. Disconnect battery negative (–) cable.
3. Connect a digital ammeter between battery negative post and negative battery cable to measure current. See Fig. 1.

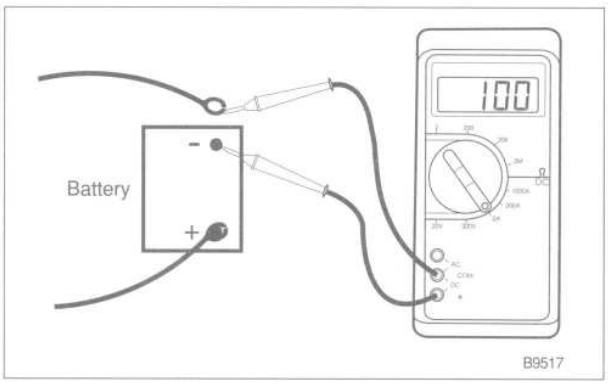

Fig. 1. Electrical system static current draw being measured.

A range of about 0 to 100 milliamps is normal, depending on the number of accessories that need constant power. A current of 500 milliamps (0.5 amp) or more may indicate a problem. To determine the circuit or component causing the problem, remove one fuse at a time until the current drops to a normal range.

Battery Open-Circuit Voltage Test

Before making the test, load the battery with 15 amps for one minute with a battery load-tester or turn on the headlights for about one minute without the engine running. Then disconnect the battery negative (–) cable and connect a digital voltmeter across the battery terminals. Open-circuit voltage levels are given in **Table a.**

If the open-circuit voltage is OK but the battery still lacks power for starting, make a load voltage test. If the open-circuit voltage is below 12.4 volts, recharge the battery and retest.

Table a. Open-Circuit Voltage and Battery Charge

Open-circuit voltage	State of charge
12.6 V or more	Fully charged
12.4 V	75% charged
12.2 V	50% charged
12.0 V	25% charged
11.7 V or less	Fully discharged

Battery Load Voltage Test

A battery load tester is required for a load voltage test. The test is made by applying a high resistive load to the battery terminals and then measuring battery voltage. The battery should be fully charged for the most accurate results. Disconnect the battery cables when making the test. If the voltage is below that listed in **Table b**, the battery should be replaced.

> ***WARNING —***
> *Always wear protective goggles and clothing when performing a load test.*

Table b. Battery Load Test–Minimum Voltage (apply 200 amp load for 15 seconds)

Ambient temperature	Voltage
80°F (27°C)	9.6 V
60°F (16°C)	9.5 V
40°F (4°C)	9.3 V
20°F (-7°C)	8.9 V
0°F (-18°C)	8.5 V

STARTER TROUBLESHOOTING

If the starter fails to operate when the ignition is in the start position, check the starter wires, terminals, and ground connections for good contact. To make the most accurate check of the battery cables and starter wiring, make a voltage drop test on the cables and wiring as described in **600 Electrical System—General.**

> ***NOTE —***
> *Repeat starter motor failure may be caused by a faulty ignition switch. A faulty switch can cause the starter to continue to run after the key is released.*

Check for battery voltage at terminal **50** of the starter motor with the key in the start position. See Fig. 2. If voltage is not present, check the wiring between the ignition switch and the starter terminal. If voltage is present and no other visible wiring faults can be found, the problem is most likely internal in the starter motor.

NOTE —

*On cars with automatic transmission, a starter relay and a neutral safety switch is used to prevent the engine from starting in gear positions other than park or neutral. If voltage is not present at terminal **50** with the key in the start position, check these components.*

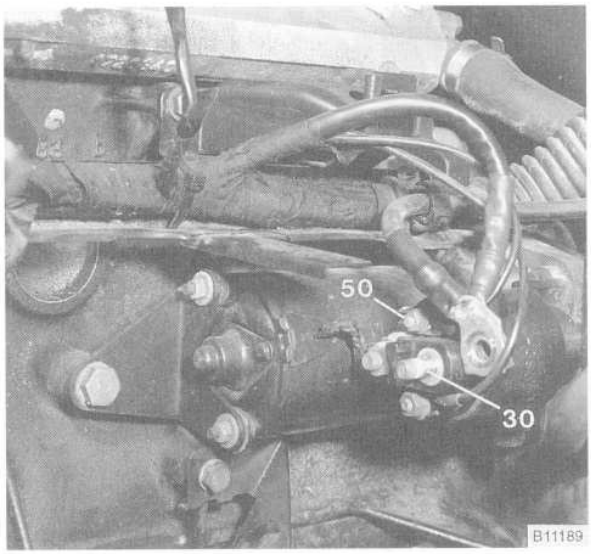

Fig. 2. Starter wiring terminal identification.

If the solenoid audibly clicks but the motor does not turn, switch on the lights and turn the key to the start position. If the lights go out while starting, the starter may have a short circuit. If the lights stay on, the solenoid is most likely the cause of the fault.

If the starter turns the engine slowly, check the wires, terminals and ground connections of the battery and starter for good contact. If no faults can be found, the starter may be worn and should be replaced.

BATTERY CHARGING

Discharged batteries can be recharged using a battery charger. Prolonged charging causes gassing that will evaporate the electrolyte to a level that can damage the battery. It is best to use a low-current charger (6 amp or less) to prevent battery damage caused by overheating.

WARNING —

The gasses given off by the battery during charging are explosive. Do not smoke. Keep open flames away from the top of the battery, and prevent electrical sparks by turning off the battery charger before connecting or disconnecting it.

CAUTION —

- *Electrolyte can damage the car. If electrolyte is spilled, clean the area with a solution of baking soda and water.*
- *Always allow a frozen battery to thaw before attempting to recharge it.*
- *Always disconnect both battery cables during battery charging. This will prevent damage to the alternator and any solid-state components. Do not exceed 16.5 volts at the battery.*

ALTERNATOR SERVICE

Before checking the alternator and regulator, make sure the battery is fully charged and capable of holding a charge. Check that the battery terminals are clean and tight and the alternator drive belt is properly tensioned and not severely worn.

To check charging system

1. Turn ignition key on. Check that the charge warning lamp comes on.

   NOTE —

   If the warning light does not come on, repair any wiring or bulb faults before continuing to check the charging system.

2. Remove the terminal cover from the rear of alternator.
3. Check for battery voltage between ground and terminal **B+** at back of alternator. Then turn ignition on and check for battery voltage between terminal **D+** and ground. If voltage is not present at either point, check for wiring for faults. See Fig. 3.

   NOTE —

   Terminal B+ is supplied battery voltage directly from the battery. Terminal D+ is supplied battery voltage via the charge warning bulb when the key is on or the engine is running.

4. If no faults are found up to this point, test alternator output.
5. If a load tester is not available, a crude output test can be done by running engine at about 2000 rpm and turning on electrical loads (fans, lights and rear window defroster, wipers). When fully loaded, battery voltage should be at least 12.0 VDC.

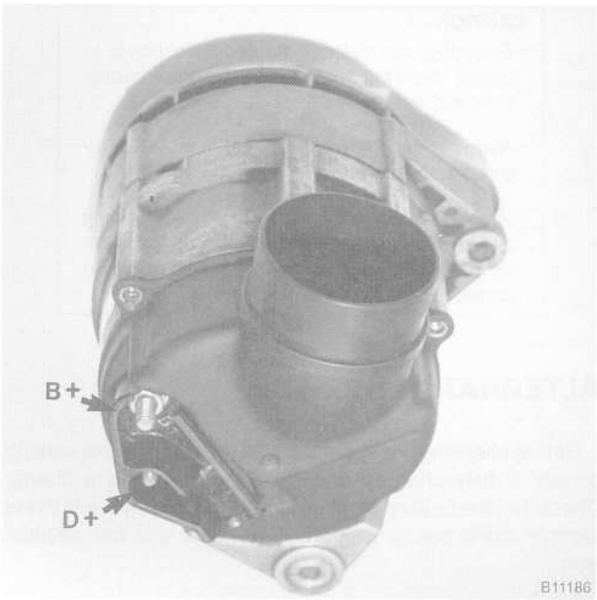

Fig. 3. Alternator terminal designation.

To remove and install alternator

Various alternators with different current ratings and from different manufacturers are installed on E34 5-series cars. Replacement alternators should be of the same make and rating as originally installed. Alternator manufacturer and ampere rating are marked on the alternator housing.

1. Disconnect negative (–) battery cable.
2. Remove alternator cooling duct and air filter housing assembly from car. Disconnect wiring from rear of alternator.
3. Remove radiator cooling fan and fan shroud. On M60 engines, remove radiator mounting clips from top of radiator. See **170 Radiator and Cooling System**.

NOTE —

The radiator cooling fan nut (32 mm wrench) has left-hand threads.

4. Remove alternator drive belt. See **020 Maintenance Program**.
5. On M60 engines, unbolt oil filter housing from front of engine.
6. Working at rear of alternator, disconnect alternator ducting. Remove terminal cover and disconnect wiring from alternator.

NOTE —

On M60 engines, disconnect the alternator ducting and loosen the lower pivot bolt from below. It will be necessary to remove the engine splash pan(s) to access the underside of the engine.

7. Remove upper adjustment mounting bolt and lower bolt(s) from alternator. Protect front of radiator with heavy cardboard or sheet metal. See Fig. 4.

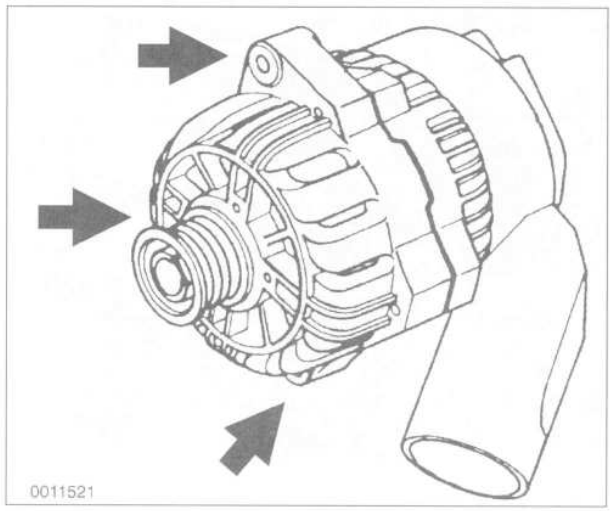

Fig. 4. Alternator mounting bolts (**arrows**). Alternator from M60 engine shown, other alternators are similar.

8. On M20, M30, and M50 engines, remove alternator using care not to damage radiator.
9. On M60 engines, remove coolant pump pulley. Pull oil filter housing forward while rotating upper alternator mounting clockwise and under oil filter housing mounting. See Fig. 5. Rotate alternator forward and then out of engine compartment, using care not to damage radiator.
10. Installation is reverse of removal.

NOTE —

On M50 engines, BMW special tool no. 12 3 100 is available to aid in the removal and installation of the alternator pulley. The special socket tool facilitates holding the alternator shaft with a hex key while loosening and tightening the pulley nut.

Tightening Torques

- D+ wire to alternator . . . . . 6 Nm (53 in-lb)
- B+ wire to alternator . . . . . 14 Nm (10 ft-lb)
- Pulley to alternator
  - M20, M30 engines . . . . . 45 Nm (33 ft-lb)
  - M50/M60 engine . . . . . 55 Nm (41 ft-lb)

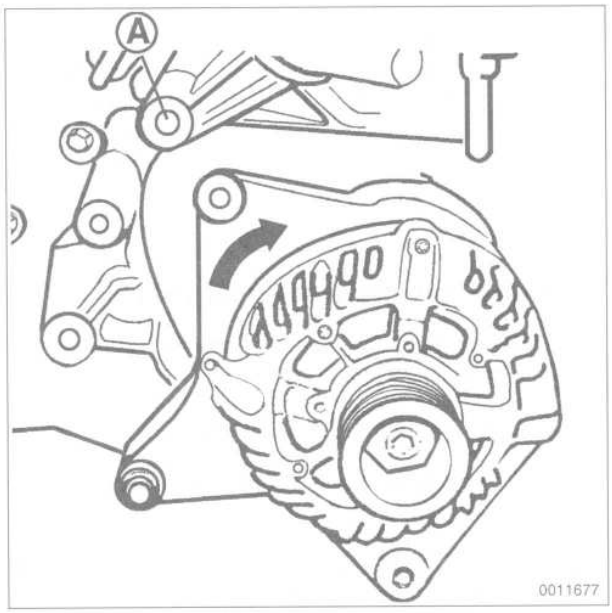

Fig. 5. On M60 engines, remove alternator by pulling oil filter housing (**A**) forward. Then roll alternator clockwise (**arrow**) under oil filter housing.

To remove and install voltage regulator

Different types of voltage regulators were installed on the E34 5-series cars. Installation of the wrong type can damage the electrical system.

1. Disconnect negative (–) cable from battery.
2. Disconnect the ducting from rear of alternator. Remove wiring cover and ducting from rear of alternator
3. Remove voltage regulator mounting screws and remove regulator from alternator. See Fig. 6.

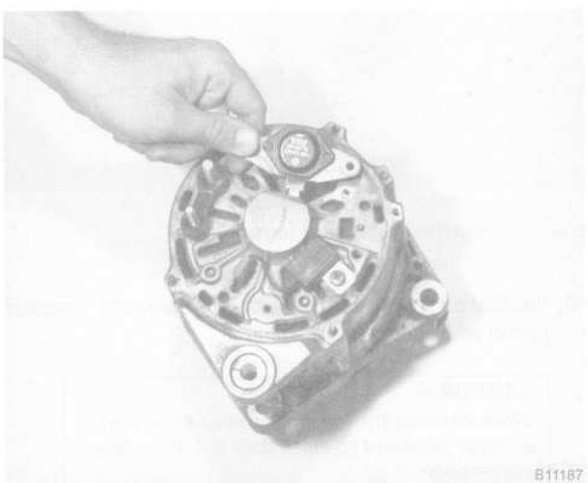

Fig. 6. Voltage regulator being removed.

4. Installation is reverse of removal. Clean brush contact surfaces in alternator and inspect brush protrusion.

To inspect and replace brushes

1. Remove voltage regulator as described above.
2. Clean brush contact surfaces and measure brush protrusion. See Fig. 7.

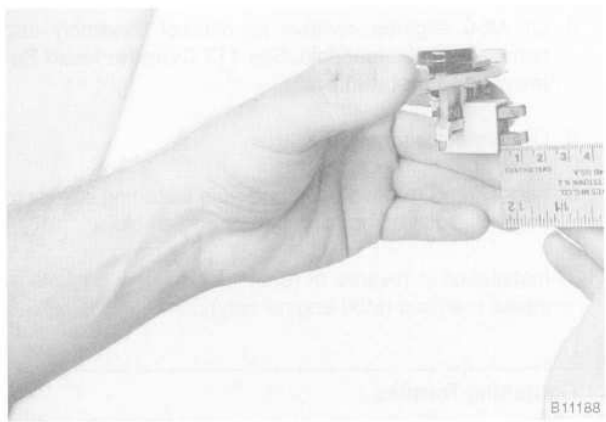

Fig. 7. Regulator brush protrusion being measured.

Voltage Regulator

- Brush protrusion (minimum) . . . . . 5 mm ($^1/_4$ in.)

3. To replace brushes, carefully and as quickly as possible, unsolder brush lead from brush holder terminal, withdrawing brush from holder at same time.

> ***CAUTION —***
> *Regulator brushes are not available as replacements parts for all versions of regulators. Check with an authorized BMW dealer for the latest in parts information before unsoldering the brushes.*

4. Remove any traces of solder from brush holder terminal.
5. Fit spring into brush holder and insert new brush.
6. Guide brush lead into terminal and solder into place. Check for free movement of brushes when solder cools.
7. Check brush slip rings in alternator for wear. Lightly clean slip rings using fine abrasive cloth.
8. Reinstall regulator and alternator.

STARTER SERVICE

To remove and install starter (M20, M30, M50 engines)

1. Disconnect negative (–) battery cable.
2. On M30 engines, remove coolant expansion tank.
3. Remove alternator cooling duct.
4. On M50 engines, remove air cleaner assembly and complete intake manifold. See **113 Cylinder Head Removal and Installation**.
5. Disconnect wiring from starter.
6. Loosen and remove bolts and nuts fastening starter to transmission bell housing and/or engine block.
7. Installation is reverse of removal. Use new gaskets at intake manifold (M50 engine only).

Tightening Torques

- Battery positive cable to starter . . . . . 8 Nm (71 in-lb)
- Intake manifold to cylinder head (M50 engine) . . 15 ± 2 Nm (11 ± 1 ft-lb)
- Starter to engine block . . . . . 50 Nm (37 ft-lb)
- Support bracket to starter (M50 engine) . . . . . 5 Nm (44 in-lb)
- Support bracket to engine block (M50 engine) . . . . . 47 Nm (35 ft-lb)
- Wire to terminal 30H . . . . . 5 Nm (44 in-lb)
- Wire to terminal 50 . . . . . 6 Nm (53 in-lb)
- Wire to terminal 30 . . . . . 12 Nm (9 ft-lb)

To remove and install starter (M60 engine)

1. Disconnect negative (–) battery cable.
2. Working from below, remove engine splash pans and heat shields from right side of engine.
3. Remove heat shield from front suspension crossmember.
4. Remove heat shield from rear of starter motor.
5. Disconnect wiring from starter. Label wiring as necessary.
6. Loosen and remove starter bolts from transmission side.
7. Installation is reverse of removal.

Tightening Torques

- Battery positive cable to starter . . . . . 8 Nm (71 in-lb)
- Starter to engine block . . . . . 50 Nm (37 ft-lb)
- Wire to terminal 30H . . . . . 5 Nm (44 in-lb)
- Wire to terminal 50 . . . . . 6 Nm (53 in-lb)
- Wire to terminal 30 . . . . . 12 Nm (9 ft-lb)

To remove and install solenoid switch

1. Disconnect negative (–) cable from battery and remove starter as described above.
2. Remove cover from solenoid switch.
3. Disconnect field winding strap between starter motor and solenoid switch.
4. Remove solenoid switch mounting screws, and separate solenoid from the starter. See Fig. 7.

NOTE —
The 3 solenoid screws are tight. Use an impact screw driver to loosen the screws.

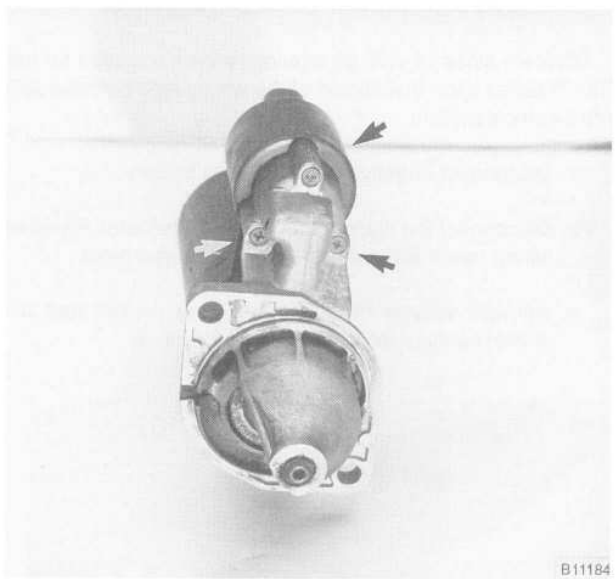

Fig. 8. Solenoid mounting screws (**arrows**).

5. Installation is reverse of removal. Lubricate solenoid piston with light grease.

CAUTION —
When installing the field winding strap to the starter motor, position it so that it does not contact the starter body.

130 Fuel Injection–DME

GENERAL 130-1
- Principle of Operation 130-2
- Basic Engine Settings 130-2
- Fault Diagnosis 130-3
- Warnings and Cautions 130-3

FUEL PRESSURE TESTS 130-3
- Relieving Fuel Pressure and Connecting Pressure Gauge 130-4
- System pressure, checking 130-4
- Residual pressure, checking 130-5
- Fuel pressure regulator response to engine load, checking 130-5

ELECTRICAL CHECKS AND COMPONENT TESTING 130-5
- Main relay, testing 130-5
- Engine coolant temperature (ECT) sensor, testing 130-7
- Intake air temperature sensor, testing (M50 and M60 engines) 130-7
- Throttle position switch, checking (M20 and M30 engines) 130-8
- Throttle position sensor, checking (M50 and M60 engines) 130-8
- Air Flow Sensor 130-9
- Air flow sensor, checking (M20 and M30 engines) 130-9
- Air flow sensor, checking (M50 engine) 130-9
- Air flow sensor, checking (M50TU and M60 engines) 130-10
- Fuel injectors, checking 130-11
- Oxygen sensor, checking 130-11
- Idle speed control valve, checking 130-12

COMPONENT REPLACEMENT 130-13
- Engine control module (ECM), replacing 130-13
- Engine coolant temperature (ECT) sensor, replacing 130-14
- Throttle position switch or sensor, replacing 130-14
- Fuel injectors, replacing 130-14
- Fuel rail and injectors, removing (M20 engine) 130-14
- Fuel rail and injectors, removing (M30 engine) 130-15
- Fuel rail and injectors, removing (M50 engine) 130-16
- Fuel rail and injectors, removing (M60 engine) 130-16
- Fuel pressure regulator, replacing 130-17
- Idle speed control valve, replacing (M20 and M30 engines) 130-18
- Idle speed control valve, replacing (M50 engines) 130-18
- Idle speed control valve, replacing (M60 engines) 130-19
- Air flow sensor, replacing (M20 engine) 130-19
- Air flow sensor, replacing (M30 engine) 130-19
- Air flow sensor, replacing (M50 engines) 130-19
- Air flow sensor, replacing (M60 engines) 130-19

ECM PIN ASSIGNMENTS 130-20

TABLES

a. DME System Variants 130-2
b. Fuel Pressure Specifications 130-4
c. Engine Coolant or Intake Air Temperature Sensor Test Values 130-7
d. Throttle Position Sensor (M50/M60 engines) . 130-8
e. ECM Pin Assignment–DME 1.3 130-21
f. ECM Pin Assignment–DME 3.1 130-23
g. ECM Pin Assignment–DME 3.3 130-25
h. ECM Pin Assignment–DME 3.3.1 130-27

GENERAL

This repair group covers fuel injection component testing and repair. Special equipment may be necessary for some of the procedures given in this repair group. If you do not have the equipment required to do the job, it is recommended that these repairs be left to an authorized BMW dealer. The BMW dealer is equipped with sophisticated diagnostic test equipment that is capable of quickly pinpointing hard-to-find DME fuel injection problems.

NOTE—

- *Complete wiring diagrams for the DME engine management system, including the EML (electronic throttle control) circuit, can be found at the rear of the manual under* **Electrical Wiring Diagrams**.
- *For DME ignition repair information, including testing the crankshaft position/rpm sensor and the knock sensors, see* **120 Ignition System—DME**.
- *For fuel supply component testing and repair, see* **160 Fuel Tank and Fuel Pump**.

Principle Of Operation

BMW E34 cars are equipped with a version of DME (Digital Motor Electronics). This engine management system is also know as Motronic, indicating combined fuel injection and ignition control through a single engine control module.

The DME engine control module (ECM) uses the electrical signals from the air flow sensor, the air and coolant temperature sensors, the crankshaft position/rpm sensor, and an oxygen sensor as its primary inputs to electronically control fuel delivery and ignition timing.

The DME system is completely electronic in operation. Air flow is measured electronically and additional sensors supply information about engine operating conditions. The ECM calculates the amount of fuel needed for the correct air-fuel ratio and actuates the fuel injectors accordingly. The amount of fuel metered to the engine is determined by how long the injectors are open.

There are four versions of DME systems used on the E34 cars. Each has the same basic components and operating principles. The differences among the three are mainly in refinements of certain operations and additional functions, introduced on newer models. See **Table a**.

Table a. DME System Variants

Model/Year	Variant (engine code)
525i	
1989-1990	DME 1.3 (M20)
1991-1992	DME 3.1 (M50)
1993-1995	DME 3.3.1 (M50TU/VANOS)
535i	DME 1.3 (M30)
530i/540i	DME 3.3 (M60)

NOTE —

Unless otherwise noted, all procedures and specifications in this repair group apply to all DME fuel injection variants.

Air Intake. Air entering the engine passes through a pleated paper air filter in the air cleaner. Air flow is controlled by the throttle valve in the throttle housing. The throttle housing is connected to the air flow sensor by flexible rubber ducts. Air entering the engine is measured by the air flow sensor. Various types of air flow sensors are used depending on the DME version:

Air Flow Sensor Applications

- DME 1.3 . . . . . Volume air flow (vane type)
- DME 3.1 . . . . . Mass air flow (hot wire)
- DME 3.3, 3.3.1 . . . . . Mass air flow (hot film)

NOTE —

On cars equipped with traction control, the throttle valve is controlled by an electronic throttle actuator (motor) instead of a cable. Repair information for this system (called EML or ADS) is not covered here due to the special electrical testing equipment required to service the system. See **Electrical Wiring Diagrams** *for the traction control electrical circuits.*

Fuel Metering. The ECM meters fuel by changing the opening time (pulse width) of the fuel injectors. To ensure that injector pulse width is the only factor that determines fuel metering, fuel pressure is maintained by a fuel pressure regulator. The injectors are mounted to a common fuel supply called the fuel rail.

The ECM monitors engine speed to determine the rate of injector openings. Other signals to the ECM help determine injector pulse time for different operating conditions. A temperature sensor signals engine temperature for mixture adaption. A throttle position switch or throttle position sensor signals throttle position. An exhaust oxygen sensor signals information about combustion efficiency for control of the air-fuel mixture.

Idle Speed Control. Idle speed is electronically controlled via idle speed control valve. The idle speed control valve maintains idle speed by bypassing varying amounts of air around the closed throttle valve. Idle speed is not adjustable.

Knock (detonation) Control. DME 3.3 and DME 3.3.1 feature knock control. Knock sensors monitor and control ignition knock through the ECM. The knock sensors function like microphones and are able to convert mechanical vibration (knock) into electrical signals. The ECM is programmed to react to frequencies that are characteristic of engine knock and adapt the ignition timing point accordingly. M50 engines are equipped with two knock sensors. M60 engines are equipped with four sensors, two per cylinder bank.

Basic Engine Settings

Idle speed, idle mixture (%CO), and ignition timing are not adjustable. The adaptive DME system is designed to automatically compensate for changes in engine operating conditions, although the adaptive range is limited. Once these limits are exceeded, driveability problems usually become noticeable.

NOTE —

If the DME adaptive limits are exceeded, the Check Engine light will most likely come on, indicating an emissions- related fault. For Check Engine light diagnostics, see **100 Engine–General**.

The DME system compensates automatically for changes in the engine due to age, minor wear or small problems, such as a disconnected vacuum hose. As a result, idle speed and mixture do not need to be adjusted as part of routine maintenance.

NOTE —

Poor initial driveability may be encountered when the battery is disconnected and reconnected. When the battery is disconnected, the DME adaptive memory is lost. The DME system will readapt after about ten minutes of driving.

Fault Diagnosis

The management of engine functions is controlled by a number of systems—ignition, fuel injection, and emission control. Because these functions are interrelated, it is difficult to isolate general driveability problems by examining individual components. For this reason, engine management and driveability troubleshooting information can be found in **100 Engine—General.** This information is organized to help isolate problems and suggest more specific troubleshooting steps by taking all of the interrelated systems into consideration.

NOTE —

DME systems have an On-Board Diagnostic (OBD) feature that detects engine management malfunctions. When a problem is identified, a fault code is stored in the engine control module (ECM) and the Check Engine lamp in the instrument cluster may also illuminate. Always check for fault codes as the first step in troubleshooting a driveability problem. See **100 Engine–General**.

Warnings and Cautions

For personal safety, as well as the protection of sensitive electronic components, the following warnings and cautions should be adhered to when working on the DME system.

WARNING —

- *The ignition system produces high voltages that can be fatal. Avoid contact with exposed terminals. Use extreme caution when working on a car with the ignition switched on or the engine running.*
- *Do not touch or disconnect any high voltage cables from the coil, distributor, or spark plugs while the engine is running or being cranked by the starter.*
- *Disconnecting the battery will erase fault code(s) stored in memory. Check for fault codes prior to disconnecting the battery cables. If the Check Engine light is illuminated, see* **100 Engine–General** *for DME fault code information. If any other system faults have been detected (indicated by an illuminated warning light), see an authorized BMW dealer. Additional systems with self-diagnostic capabilities include; ABS (ANTI LOCK), SRS (AIR BAG), EML and ASC (Traction Control).*
- *Connect and disconnect the DME system wiring and test equipment leads only when the ignition is switched off.*

WARNING —

- *Gasoline is highly flammable and its vapors are explosive. Do not smoke or work on a car near heaters or other fire hazards when diagnosing and repairing fuel system problems. Have a fire extinguisher available in case of an emergency.*
- *When working on an open fuel system, wear suitable hand protection, as prolonged contact with fuel can cause illnesses and skin disorders.*
- *Before making any electrical tests that require the engine to be cranked using the starter, disable the ignition system as described in* **120 Ignition System–DME**.

CAUTION —

- *Do not connect any test equipment that delivers a 12-volt power supply to terminal 15 (+) of the ignition coil. The current flow may damage the ECM. In general, connect test equipment only as specified by BMW, this manual, or the equipment maker.*
- *Do not attempt to disable the ignition system by removing the center coil wire or by removing the distributor cap (where applicable). High voltage may arc to other electrical components causing extensive damage.*
- *Do not run the engine with any of the spark plug wires disconnected. Catalytic converter damage may result.*
- *Always wait at least 40 seconds after turning off the ignition before removing the control module connector. If the connector is removed before this time, residual power in the system relay may damage the control module.*
- *Cleanliness is essential when working on an open fuel system. Thoroughly clean fuel line connections and surrounding areas before loosening. Avoid the use of compressed air, and avoid moving the car. Only install clean parts.*
- *Fuel system cleaners and other chemical additives other than those specifically recommended by BMW may damage the catalytic converter, the oxygen sensor or other fuel supply components.*

FUEL PRESSURE TESTS

Checking fuel pressure is a fundamental part of troubleshooting and diagnosing the DME system. Fuel pressure directly influences fuel delivery. An accurate fuel pressure gauge will be needed to make the tests.

There are two significant fuel pressure values: 1) system pressure—created by the fuel pump and maintained by the pressure regulator, and 2) residual pressure—the pressure maintained in the closed system after the engine (and fuel pump) is shut off.

Relieving Fuel Pressure and Connecting Fuel Pressure Gauge

To prevent fuel from spraying on a hot engine, system fuel pressure should be relieved before disconnecting fuel lines.

One basic method of relieving the pressure is to remove the fuses for the fuel pump and then run the engine until it stalls. Another method is to connect a hand vacuum pump to the vacuum connection on the fuel pressure regulator. When vacuum is applied to the regulator it will open and relieve fuel pressure through the return line to the fuel tank.

To connect the fuel pressure gauge, wrap a shop towel around the fuel supply line and then disconnect it from the fuel rail. The supply line connects to the fuel rail at the opposite end from where the fuel pressure regulator is connected. Connect a length of fuel line and a T-fitting to the fuel rail and reconnect the supply line to the T-fitting. Connect the fuel gauge to the T-fitting. See Fig. 1.

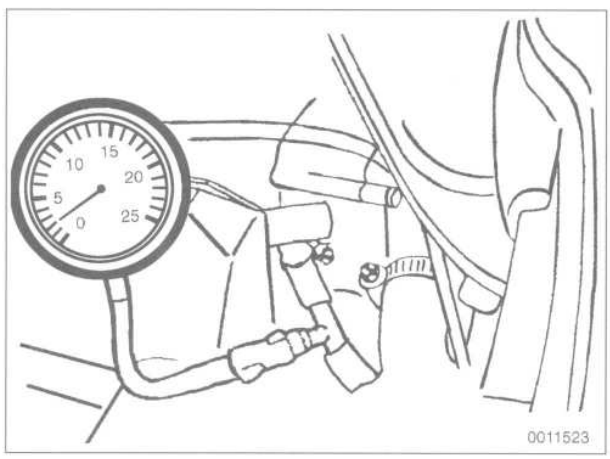

Fig. 1. Fuel pressure gauge shown connected to inlet (supply) side of fuel rail on M60 engine. Supply line connects to fuel rail at opposite end from fuel pressure regulator.

NOTE —

Use BMW pressure gauge Part No. 13 3 060, or an equivalent. The fuel pressure gauge should have a range of 0 to 5 bar (0 to 75 psi) and must be securely connected with hose clamps to prevent it from coming loose under pressure.

System pressure, checking

System pressure is the pressure value that is created by the fuel pump and maintained by the pressure regulator. See Fig. 2. System pressure is not adjustable.

1. Relieve fuel pressure and connect a pressure gauge as described earlier.

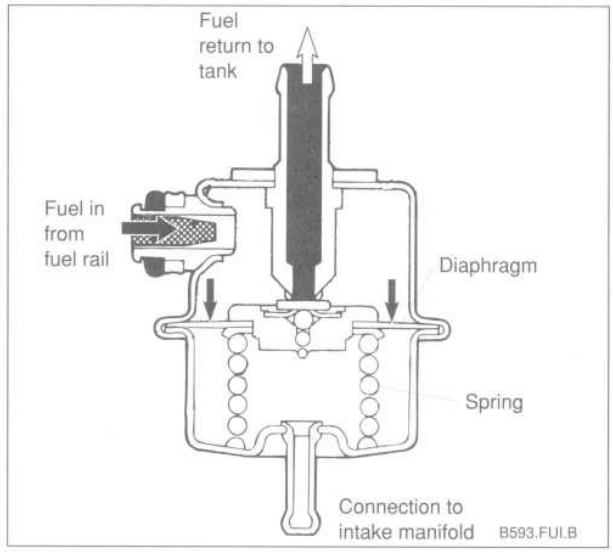

Fig. 2. Fuel pressure regulator. Fuel pressure deflects diaphragm to return fuel to tank when pressure reaches desired limit.

2. Operate the fuel pump by bypassing the fuel pump relay as described in **160 Fuel Tank and Fuel Pump**.

> ***WARNING —***
> *The fuel pump is capable of developing a much higher pressure than that regulated by the pressure regulator. In the event the fuel pump check valve is faulty (stuck closed), make sure the fuel pressure does not rise above 6.0 bar (87 psi). Damage to the fuel lines or fuel system components could result.*

3. Check that the fuel pressure corresponds to the specifications listed in **Table b**.

Table b. Fuel Pressure Specifications

Engine	Fuel pressure
M20, M30	3.0±0.06 bar (43.5±0.9 psi)
M50, M60	3.5±0.06 bar (51±0.9 psi)

4. When finished testing, disconnect the pressure gauge and reconnect the fuel line. Tighten the hose clamp.

If the system pressure is too high, check the return line from the pressure regulator to the tank. Check for kinks in the hose. Blow compressed air through the line to check for blockages. If no faults can be found, the pressure regulator is faulty and should be replaced.

> ***CAUTION —***
> *Do not use compressed air above 40 psi to blow out lines or components. Internal damage to components may result.*

If the system pressure is too low, repeat the pressure test while gradually clamping off the fuel return line. See Fig. 3. The fuel pressure should quickly rise. If the pressure does not respond quickly, and no leaks can be found, the fuel pump may be faulty. Test the fuel pump delivery rate as described in **160 Fuel Tank and Fuel Pump**.

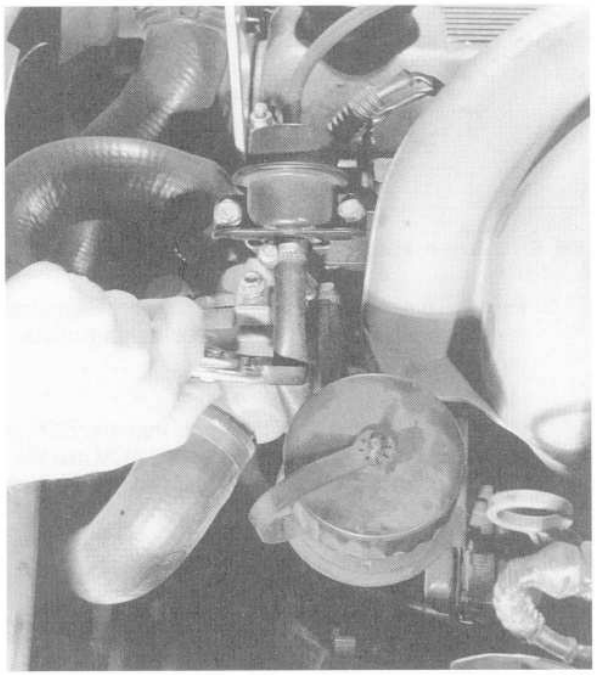

5203

Fig. 3. Fuel pressure regulator return hose being clamped shut to check fuel pump delivery pressure (M20 engine shown).

Residual pressure, checking

For quick restarts and to avoid vapor lock when the engine is hot, the system is designed to retain fuel pressure after the engine has been turned off. This residual pressure is primarily maintained by a check valve at the fuel pump outlet and the fuel pressure regulator. The fuel pump check valve is not serviceable as an individual part.

1. Relieve fuel pressure and connect a pressure gauge as described earlier.

> ***WARNING —***
> *Fuel will be discharged. Wrap a shop towel around the fuel line fitting when disconnecting the fuel line. Do not smoke or work near heaters or other fire hazards. Keep an approved fire extinguisher handy.*

2. Operate the fuel pump for approximately one minute by bypassing the fuel pump relay as described in **160 Fuel Tank and Fuel Pump**.
3. Observe the fuel pressure gauge after 20 minutes. The pressure should not drop off more than 0.5 bar from the system pressure listed in **Table b**.
4. When finished testing, disconnect the pressure gauge and reconnect the fuel line. Tighten the hose clamp.

If the fuel system does not maintain pressure, there is a leak in the system. Check visually for leaks in fuel lines or at unions. Leaks can also be due to a leaking injector or a faulty fuel pump check valve. Check the pump check valve by repeating the test, but before turning the fuel pump off pinch off the return line at the fuel rail. If the pressure is now maintained, the fault is most likely the fuel pump check valve.

Fuel pressure regulator response to engine load, checking

1. With the fuel pressure gauge connected, reinstall the fuel pump relay. Start the engine and allow it to idle.

> ***NOTE —***
> *The fuel pressure should be slightly lower than the specifications listed in* **Table b**. *Engine vacuum acting on the fuel pressure regulator diaphragm reduces the fuel pressure.*

2. With the engine idling, remove the vacuum hose from the regulator. The pressure should increase.
3. Reconnect the hose and check that the pressure returns to the lower pressure.
4. When finished testing, disconnect the pressure gauge and reconnect the fuel line. Tighten the hose clamp.

If any faults are found, either the fuel pressure regulator or the vacuum hose at the pressure regulator is faulty.

> ***NOTE —***
> *A cracked or leaking pressure-regulator vacuum hose may cause an erratic idle.*

ELECTRICAL CHECKS AND COMPONENT TESTING

The tests given under this heading are made using a digital multimeter. Always check for On-Board Diagnostic fault codes as the first step in troubleshooting DME problems. See **100 Engine–General**.

Main relay, testing

The main relay is energized via the DME engine control module and supplies plus(+) power to many of the DME components and subsystems, including the fuel pump relay. If this relay is faulty, the engine will not start.

CAUTION —

- *Avoid damaging harness connectors or relay panel sockets. Jumper wires should be fabricated with flat-blade end connectors that are the same size as the connector or relay terminals being tested.*
- *Always switch the test meter to the appropriate function and range before making test connections. Connect and disconnect test equipment only with the ignition switched off.*

1. With the ignition off, remove the main relay. See Fig. 4.

NOTE —

Relay positions may vary. The main relay is normally white in color. To confirm that the main relay has been correctly identified, check for a large (6 mm^2) red wire at terminal 30 of the relay socket. The main relay is usually white in color.

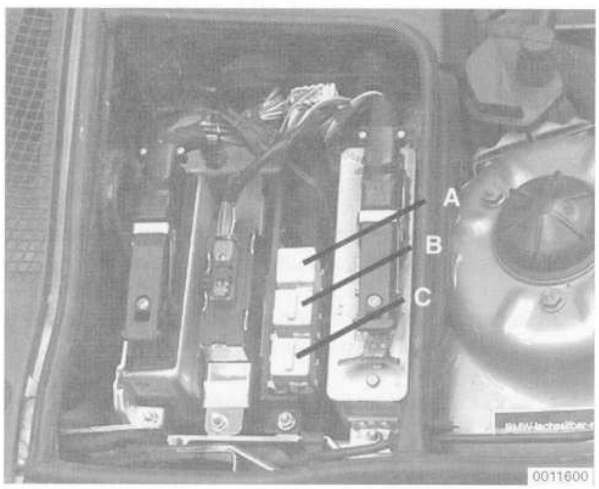

Fig. 4. Main relay (**A**) in electronics box (E-box). V8 relay position varies. Check sticker on E-box cover for V8 position.

2. Check for voltage at terminal 30 and terminal 86 of the relay socket. See Fig. 5.
   - If battery voltage is present continue testing
   - If battery voltage is not present at either point, check the large red wire in the relay socket. See **Electrical Wiring Diagrams.**

NOTE —

The wiring to terminals 85 and 86 in the main relay may be reversed. Electrically, the relay will still function correctly. If voltage is not present at terminal 86, check for voltage at terminal 85.

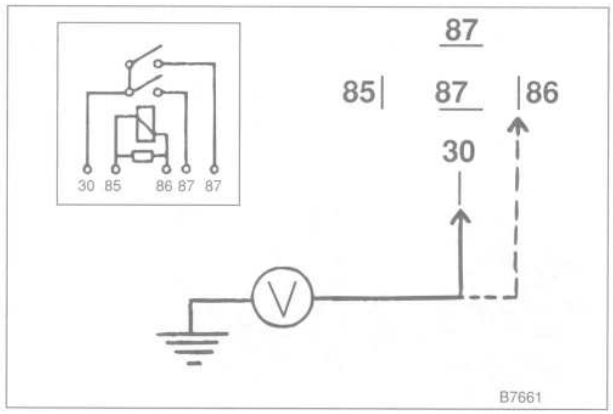

Fig. 5. Voltage checks at system relay terminals 30 and 86.

3. Reinstall the relay and turn the ignition on. Gain access to the underside of the relay socket and check for ground at terminal 31 (brown wire).
   - If ground is present continue testing.
   - If ground is not present, the signal from the ECM is missing. Check the wire between the ECM and the relay. If no faults can be found, the ECM may be faulty.
4. With the ignition on and the relay installed, check for battery voltage at terminals 87 and 87a.
   - If battery voltage is present, the relay has energized and is functioning correctly.
   - If battery voltage is not present and all earlier tests are OK, the relay is faulty and should be replaced.

NOTE —

The relay may be marked with terminal 87 at two of the terminals instead of 87 and 87a.

Engine coolant temperature (ECT) sensor, testing

The ECT sensor sends continuous engine coolant temperature information to the ECM. The ECT sensor is of the NTC (negative temperature coefficient) type; as temperature increases sensor resistance decreases.

1. Disconnect the harness connector from the ECT sensor.

NOTE —

On M50 and M60 engines, the top engine cover(s) will need to be removed to access the ECT sensor.

Engine coolant temperature (ECT) sensor location

- M20, M30 engine . . . . front of engine, in coolant outlet (blue plug)
- M50 engine . . . . . in cylinder head, left side of engine (front position)
- M60 engine . . . . . rear of engine, in coolant crosspipe (white plug)

2. Turn the ignition on and check for 5 volts (VDC) between the supply voltage wire in the connector and ground. If voltage is not present, test the ECM inputs/outputs as described later.

ECT sensor supply voltage check

- M20, M30, M50 engines. . . . . brown/red wire and ground
- M60 engines. . . . . yellow /green wire and ground

3. With the harness connector disconnected, check the resistance across the sensor terminals. See Fig. 6. **Table c** lists sensor resistances. If any faults are found, the sensor should be replaced.



Fig. 6. ECT sensor (**arrow**) resistance being checked on M20 engine.

Table c. Engine Coolant Temperature Sensor or Intake Air Temperature Sensor Test Values

Test temperature	Resistance (k Ohms)
14 ± 2°F (–10 ± 1° C)	7–11.6
68 ± 2°F (20 ± 1° C)	2.1–2.9
176 ± 2°F (80 ± 1° C)	0.27–0.40

NOTE —

The test values listed represent only three test points from a continuous resistance NTC sensor. For a more accurate test, the sensor can be removed and tested in a bath of hot water using a thermometer.

Intake air temperature sensor, testing (M50 and M60 engines)

On M50 and M60 engines (with mass air flow sensor), a separate intake air temperature sensor is mounted in the intake manifold. This signal is used as a correction factor for fuel injection and ignition timing. See Fig. 7.



Fig. 7. Intake air temperature sensor location on M50 engine (**arrow**).

NOTE —

On M20 and M30 engines without traction control, the intake air temperature (IAT) sensor is integrated into the volume air flow sensor. On M30 engines with traction control, a separate intake air temperature sensor is used by the electronic throttle control system and can be tested as described below.

1. Disconnect the harness connector from the intake air temperature sensor.

Intake air temperature (IAT) sensor location

- Intake air temperature (IAT) sensor
  M50 engine . . . . . in intake manifold, near throttle housing
  M60 engine . . . . . in intake manifold, front of engine, right side

2. Turn the ignition on and check for 5 volts (VDC) between the supply voltage wire in the connector and ground. If voltage is not present, test the ECM inputs/outputs as described later.

IAT sensor supply voltage check

- M50 engines. . . . . grey wire and ground
- M60 engines. . . . . yellow/red wire and ground

3. Check the resistance across the sensor terminals. **Table c** lists sensor resistances. If any faults are found, the sensor should be replaced.

Throttle position switch, checking (M20 and M30 engines)

On M20 and M30 engines, a throttle position switch provides an idle and full throttle position signal to the ECM. The idle position signal is used mainly for activation of the idle speed control valve. The full throttle position signal is used for A/C compressor cutout and fuel enrichment.

On M20 engines, the switch is mounted to the underside of the throttle housing. On M30 engines, the switch is mounted to the side of throttle housing. The switch can be checked with the throttle housing installed.

NOTE —

On 535i models (M30 engine) with traction control, the EML control module provides the throttle position signal to the ECM. Special testing equipment is necessary to test the EML system and is therefore not covered in this manual.

1. Disconnect the harness connector from the throttle switch.

2. On cars with manual transmission, turn the ignition on and check for supply voltage (VDC) between the center terminal and either of the outer terminals of the harness connector. If voltage is not present at either wire, check the wiring from the ECM.

3. On cars with automatic transmission, turn the ignition on and check for supply voltage (VDC) between terminal 5 and ground and between terminal 6 and ground. If voltage is not present, check the wiring from the ECM. See Fig. 8.

4. Check for continuity at the switch terminals with the throttle at idle and again at the full open position. See **Fig, 8** for test terminals. Adjust or replace the switch if any faults are found.

Throttle position switch test terminals (M20/M30 engines)

- Manual transmission
  - idle position . . . . . 2 and 18
  - full throttle position . . . . . 3 and 18
- Automatic Transmission
  - idle position . . . . . 4 and 6
  - full throttle position . . . . . 4 and 5

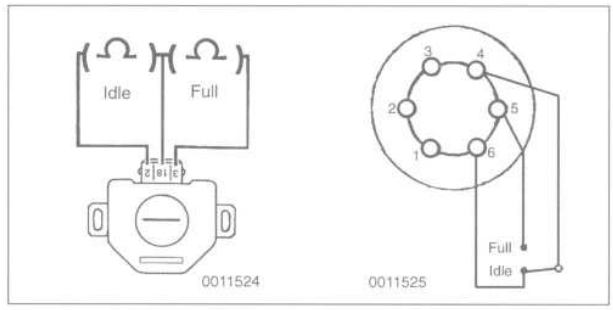

Fig. 8. Throttle position switch terminal identification for cars with manual transmission (left) and automatic transmission (right).

5. To adjust the throttle switch, loosen the switch screws and connect an ohmmeter across the switch terminals. With the throttle at idle, rotate the switch just until there is continuity. Tighten the mounting screws. Seal the mounting screws using paint or lacquer.

NOTE —

On M20 engines, remove the throttle housing to access the throttle position switch screws.

Throttle position sensor, checking (M50 and M60 engines)

The throttle position sensor is mounted on the side of the throttle housing and is directly connected to the throttle valve shaft. The ECM sends a voltage signal to the potentiometer-type sensor and monitors the voltage that comes back. Resistance decreases (voltage increases) as the throttle opens.

Check throttle position sensor function by disconnecting the harness connector and checking continuity across the terminals while changing the throttle position. See Fig. 9. Resistance test values are listed below. If the results are incorrect, replace the throttle position sensor. The sensor is not adjustable.

Table d. Throttle position sensor (M50/M60 engines)

test conditions	terminals	test value
harness connector disconnected, ignition on	1 and ground in harness connector	5 VDC (approx.)
harness connector disconnected, ignition off	1 and 3 at sensor terminals	4.0k ohms (approx.)
Throttle plate rotated from idle to full throttle position	1 and 2 at sensor terminals	continuously variable from 1.0–4.0k ohms (approx.) without interruption



Fig. 9. Throttle position sensor terminal identification on M50 engine.

NOTE—
The throttle potentiometer is not adjustable. If test results are incorrect, the throttle position sensor should be replaced.

Air Flow Sensor

There are three types of air flow sensors used on the cars covered by this manual. Testing procedures vary depending on type. The air flow sensor is not adjustable and must only be tested with a digital multimeter.

Air Flow Sensor Variants

- M20 and M30 engines (DME 1.3) . . . . . Volume air flow sensor (vane type)
- M50 engine (DME 3.1) . . . . . Mass air flow sensor (hot wire)
- M50TU and M60 engines (DME 3.3 and DME 3.3.1) . . . . . Mass air flow sensor (hot film)

Air flow sensor, checking (M20 and M30 engine)

The volume air flow sensor provides a varying voltage signal to the ECM based on the position of the air vane or flap.

1. Disconnect the harness connector from air flow sensor.

2. Connect a voltmeter to terminal 3 in the connector. See Fig.10. With the ignition on, there should be approximately 5 volts. If any faults are found, check the wire from the ECM.

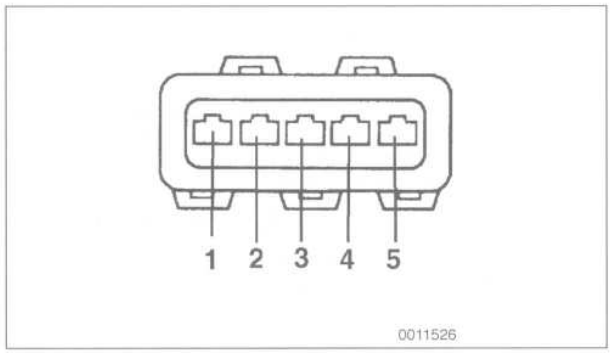

Fig. 10. Volume air flow sensor harness connector terminal identification for DME 1.3.

3. Turn the ignition off and remove the intake boot from the end of the sensor. Connect an ohmmeter across terminals 2 and 3. Swing the air flow sensor vane (flap) throughout its range of travel. The resistance should change steadily without interruption.

4. Connect an ohmmeter across terminals 1 and 4 to test the intake air temperature sensor in the air flow sensor. Compare the resistance value to the values listed in **Table c**, given earlier.

5. If any faults are found the sensor is faulty and should be replaced.

Air flow sensor, checking (M50 engine)

On cars with DME 3.1, a hot wire mass air flow sensor is used. When the engine is running, a current is used to heat a thin wire or thin film in the center of the meter. See Fig. 11. The current in the wire is regulated to maintain a temperature of 100°C more than air passing over it. The current used to heat the wire is electronically converted into a voltage measurement corresponding to the mass of intake air.

To keep the wire clean, it is heated to a temperature of about 1000°C (1830°F) for one second. This "burn-off" cycle takes place automatically, four seconds after the engine is turned off.

If the hot wire breaks or if there is no output from the air flow sensor, the ECM automatically switches to a "limp-home" mode and turns on the Check Engine light. The engine can usually be started and driven. The air flow sensor has no internal moving parts and cannot be serviced.

1. Disconnect the air flow meter from the air cleaner only. Leave it connected to the duct leading to the intake manifold and leave the wiring harness connected.

2. Start engine and run it to normal operating temperature.

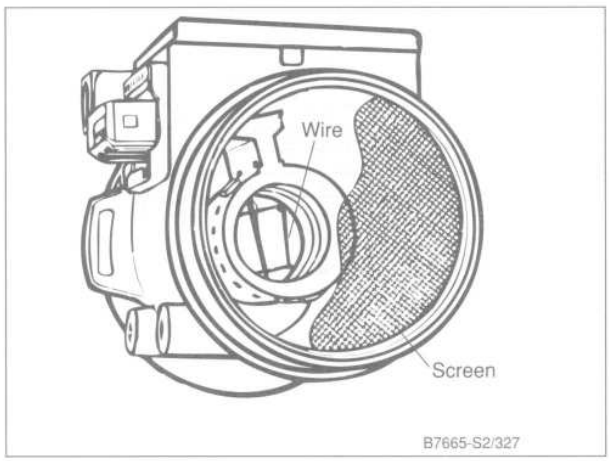

Fig. 11. Mass air flow sensor. Hot wire sensor used on cars with DME 3.1 (1991-1992 525i models).

3. Rev the engine to at least 2,500 rpm, then shut it off. Look through the front of the meter at the hot wire. After approximately four seconds the wire should glow brightly for about one second.

   NOTE —
   If the wire glows as specified, then the air flow meter and ECM are probably operating correctly. If the wire does not glow, continue testing.

4. Remove the air flow sensor and look through it to see if the wire is broken. If the wire is broken, the meter will have to be replaced. If the wire is intact, continue testing.

5. Reinstall the air flow sensor and the harness connector. Peel back the rubber boot from the harness connector. Working from the rear of the connector, connect a digital voltmeter across terminals 1 and 4. See Fig. 12.

   CAUTION —
   Use only a digital voltmeter for the above test. An analog meter can damage the air flow sensor.

6. Start and rev the engine to at least 2,500 rpm, then shut it off. After about 4 seconds, the voltage should rise to about 4 volts for about one second. If voltage is present, but the wire does not glow, the air flow sensor is faulty and should be replaced.

7. If voltage is not present in step 6, turn the ignition key on and check for voltage and ground at the connector sensor. There should be ground at pin 4. There should be positive (+) battery voltage at pin 2.

8. With the ignition off, disconnect the harness connector from air flow sensor. Check the resistance at the test terminals in the meter.

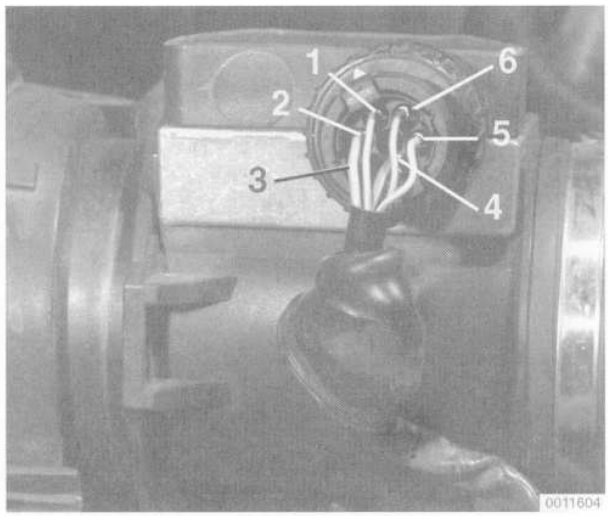

Fig. 12. Mass air flow sensor terminal identification on cars with DME 3.1. Connect voltmeter across terminals 1 (+) and 4 (–) to check meter burn-off voltage.

Air flow sensor test values (DME 3.1)

• terminals 5 and 6	3-4 ohms

If any faults are found, check for wiring breaks between the air flow sensor and the ECM and between the air flow sensor and the main relay. Also check the operation of the main relay.

Air flow sensor, checking (M50TU and M60 engines)

On cars with DME 3.3 and DME 3.3.1 a hot film mass air flow sensor is used. When the engine is running, a current is used to heat a thin film in the center of the meter. The current used to heat the film is electronically converted into a voltage measurement corresponding to the mass of intake air.

NOTE —
A burn-off cycle is not used on hot film sensors.

If the hot film breaks or if there is no output from the air flow sensor, the ECM automatically switches to a "limp-home" mode and turns on the Check Engine light. The engine can usually be started and driven. The air flow sensor has no internal moving parts and cannot be serviced or adjusted.

1. Disconnect the harness connector from the air flow sensor.

2. Turn the ignition on and check for voltage and ground at the connector. There should be ground at pin 1. There should be positive (+) battery voltage at pin 3.

If any faults are found, check for wiring breaks between the air flow sensor and the ECM and between the air flow sensor and the main relay. Also check the operation of the main relay.

Fuel injectors, checking

The fuel injectors are switched on and off (opened and closed) by the ECM. The injectors are connected to a common fuel supply, called the fuel rail.

NOTE —

The information below is an electrical test only. The test does not check spray patterns or fuel supply to the injectors.

1. On M50 and M60 engines, remove the plastic engine cover(s) from the top of the engine.

2. Pry off the cover from the injector wiring duct to access the wiring to the injectors. Connect a digital voltmeter to an injector connector. See Fig. 13.



Fig. 13. Voltmeter connected across fuel injector connector with engine running (M50 engine shown).

CAUTION —

Use only a digital voltmeter or an LED injector tester. Use of an analog VOM or incandescent test light may damage the control module.

3. Operate the starter or run the engine and check that pulsed voltage is present. (approx. 0.3–1.0 VDC).

NOTE —

To quick-check a single injector, place a screwdriver or stethoscope on the injector with the engine running. If the injector is operating, there should be an audible buzz.

4. If the light doesn't flash or there is no voltage, check for power to the injector. There should be battery voltage (+) at the red/white wire of each injector connector with the ignition key on. If not, check the DME main relay and the wiring to the injector using the wiring diagrams listed in **Electrical Wiring Diagrams**.

NOTE —

If there is positive (+) battery voltage as described in step 3, but there was no response at voltmeter in step 2, check the wire(s) from the ECM to the injectors. If no wiring faults can be found, the pulsed ground signal from the control module may be missing. Check the outputs from the ECM.

5. If power is present as described in the above step, unplug the injector connectors and check the injector resistance. Replace the injector if the resistance is incorrect.

Injector Coil Resistance

- M20, M30, M50 engines . . . . 16 ohms at 68°F (20°C)

NOTE —

- *Injector resistance will vary depending on temperature. In general, the range should be between 10 and 20 ohms.*
- *Injector coil resistance specifications for M60 engines are not available from BMW.*

6. If no faults are found up to this point, check the pulse-time regulation function of the control module with the engine cold. Peel back the rubber boot from the injector connector and connect a voltmeter to the wires in the connector. Start the engine. Check that the voltage decreases as the engine warms up.

7. If any faults are found, check the ECM inputs and outputs as described later.

Oxygen sensor, checking

The oxygen sensor provides an input voltage signal (0-1 VDC) to the ECM based on the oxygen content in the exhaust gas.

To generate voltage, the sensor temperature must exceed 600°F, so it is electrically heated. 6-cylinder engines use one oxygen sensor. 8-cylinder engines are equipped with two oxygen sensors.

NOTE —

The test given below is not a conclusive test of oxygen sensor efficiency and does not test how quickly the oxygen sensor reacts to changing conditions. For the most accurate test, an exhaust gas analyzer should be used.

1. Connect a digital voltmeter to pins 1 an 2 (black wire and yellow wire) in the connector. Leave the connector connected. See Fig. 14.

Oxygen sensor connector location (4-pin, black)

- M20 engine . . . . . right-hand rear of engine, near electronics box (E-box)
- M30 engine . . . . . rear of engine compartment, lower left-hand side
- M50 engine . . . left-hand side of engine, below starter
- M60 engine . . . . . beneath car, under transmission

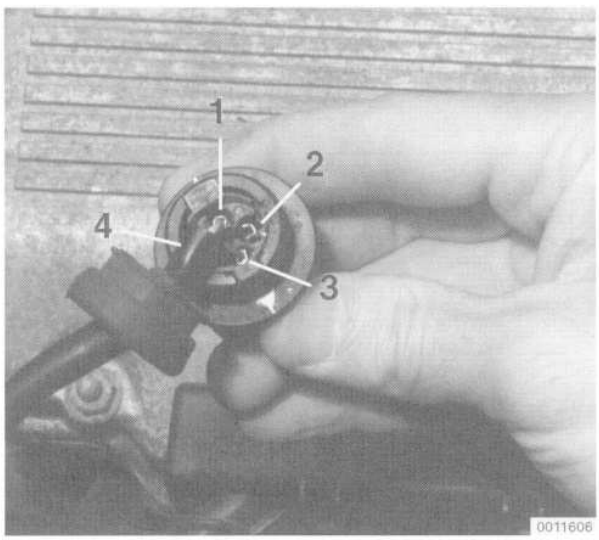

Fig. 14. Oxygen sensor connector terminal identification (M20 engine shown).

2. Start the car and let it idle. The oxygen sensor should start to produce a fluctuating voltage within a short period. If the voltage is incorrect, turn the engine off and check the preheater circuit as described below.

> ***WARNING —***
> *Exhaust manifolds and pipes can be hot enough to cause serious burns. Wear suitable heavy gloves and other appropriate protection.*

Oxygen sensor

- voltage at idle . . . . . 0.2 to 0.8 VDC, fluctuating

3. To check the sensor response to lean and rich mixtures, create an air leak, or pull the vacuum hose off the fuel pressure regulator to increase fuel pressure.

4. Separate the sensor harness connector from the sensor. Check for battery voltage between terminals 3 and 4 in the main harness side of the connector with the engine running. If voltage is not present, check the oxygen sensor heater relay. See **610 Fuses and Relays**.

5. Check the heater element resistance between terminals 3 and 4 in the sensor side of the connector. If the element is electrically open (no continuity), replace the sensor.

NOTE —

- *The oxygen sensor heater relay is mounted in the electronics box (E-box) in the right rear of the engine compartment. The heater relay is energized with positive (+) battery voltage from the DME main relay and a switched ground from the ECM. See* **Electrical Wiring Diagrams**.
- *On 535i models, an oxygen sensor heater relay is not used. The oxygen sensor heater is supplied power via the fuel pump relay.*

6. If the oxygen sensor doesn't produce a fluctuating voltage and the preheater circuit is OK, replace the sensor.

Tightening Torque

- Oxygen sensor to exhaust pipe . . . . . 55 Nm (41 ft-lb)

NOTE —

If not already applied, coat the oxygen sensor threads with an anti-seize compound before installation. Do not get the compound on the sensor tip.

Idle speed control valve, checking

Idle speed is maintained by the ECM through the idle speed control valve. The idle control function compensates for engine load and engine operating conditions. Idle speed is adaptive through the ECM and no idle speed adjustments can be made.

Before checking the valve, confirm that the throttle position switch or throttle position sensor is working correctly.

NOTE —

- *On 535i models with traction control, an idle speed control valve is not used. Instead, the idle speed is controlled via the EML electronic throttle actuator (motor).*
- *The test given below is an electrical check only. It does not check the mechanical operation of the valve. If the valve is sticking, hanging up or is sluggish in operation, substituting in a known good valve is the best way to check for a mechanical fault.*

1. With the engine running, check that the idle speed control valve is buzzing.

2. Turn on the A/C or shift the car into drive. Idle should remain steady or increase slightly.

NOTE —

- *On M50 engines, the idle speed control valve can be accessed without removing the intake manifold.*
- *On M60 engines, the idle speed control valve is beneath the top engine cover at the front of the engine.*

3. If the valve is not buzzing, or if idle decreases in step 2, stop the engine and disconnect the harness connector from the valve. Check the resistance of the valve across its terminals. See Fig. 15. Test values are listed below.

NOTE —

If you suspect an intermittent fault, lightly tap the valve while testing resistance.

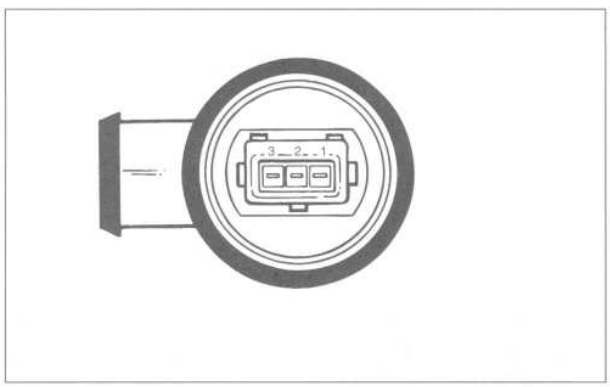

Fig. 15. Idle speed control valve terminal identification.

Idle speed actuator coil resistance values

- M20, M30, M50 engines
  - terminals 1 and 2 . . . . . 20 ± 2 ohms
  - terminals 2 and 3 . . . . . 20 ± 2 ohms
  - terminals 1 and 3 . . . . . 40 ± 4 ohms
- M60 engines
  - terminals 1 and 2 . . . . . 12 ± 2 ohms
  - terminals 2 and 3 . . . . . 12 ± 2 ohms
  - terminals 1 and 3 . . . . . 23 ± 4 ohms

4. With the valve harness connector disconnected, check for battery voltage at the red/white wire in the connector with the ignition turned on.
   - if there is no voltage, check the wiring between the connector and the DME main relay. See **Electrical Wiring Diagrams**.

NOTE —

The idle speed actuator receives positive (+) battery voltage from the DME main relay.

5. If voltage is present as described above, check the wiring between the ECM and the valve. If no wiring faults are found, check the ECM signal to the valve.

NOTE —

- *The idle speed control valve signal can be checked using a duty cycle meter (or dwell meter). Connect the meter to the valve following the manufacturer's instructions. Turn on the A/C or create a large air leak and check that the valves duty cycle reacts while the idle speed remains steady.*
- *There are some additional inputs to the control module that affect idle speed (i.e. throttle position, A/C-on signals, and A/T Drive position). Check these signals if idle problems persist. See* **ECM Pin Assignments**.

COMPONENT REPLACEMENT

Engine control module (ECM), replacing

1. Disconnect the negative (–) battery cable.

2. Remove the cover from the electronics box (E-box). The cover is retained with four captive screws. Peel back weather stripping for improved access.

3. Unplug the control module harness connector by releasing the fastener and pivoting the connector up and off of the ECM. See Fig. 16.

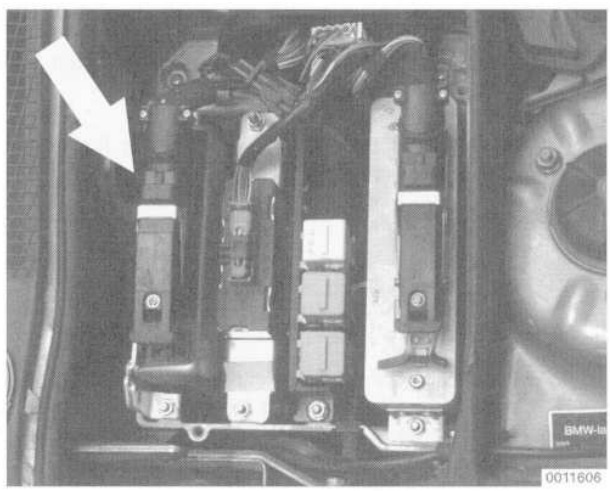

Fig. 16. DME engine control module location (**arrow**) in electronics box.

4. On 1989 and 1990 models, remove the ECM retaining nuts and lift the ECM from its holder. On 1991 and later models, pry out the ECM retaining clips and lift the ECM out.

5. Installation is the reverse of removal.

Engine coolant temperature (ECT) sensor, replacing

1. On M50 and M60 engines, remove the top engine cover(s).
2. Disconnect the harness connector from the ECT sensor.

Engine coolant temperature (ECT) sensor location

- M20, M30 engine . . . . front of engine, in coolant outlet (blue plug)
- M50 engine . . . . . cylinder head, left side (front most sensor, blue plug)
- M60 engine . . . . . rear of engine, in coolant crosspipe (white plug)

3. Remove the sensor.
4. Installation is the reverse of removal. Use a new copper sealing washer when installing the new sensor. Replace any lost coolant.

Tightening Torques

- Coolant temperature sensor
  M20, M30, M50 engines . . . . . 13 Nm (10 ft-lb)
  M60 engines . . . . . 18 Nm (13 ft-lb)

Throttle position switch or sensor, replacing

1. Unplug the harness connector from the switch or sensor.
2. Remove the mounting screws holding the switch or sensor to the throttle housing.

NOTE —
On M20 engines, removal of the throttle switch screws is best accomplished if the throttle housing is first removed.

3. Installation is the reverse of removal. On DME 1.3 (M20 and M30 engines), adjust the switch as described under **Throttle position switch, checking (DME 1.3)**.No adjustments are necessary on later DME versions with throttle position sensor.

Fuel injectors, replacing

The fuel injectors are removed by first removing the complete injector/fuel rail assembly and then unclipping the injectors from the fuel rail.

Cleanliness is essential when working with fuel circuit components. Thoroughly clean the unions before disconnecting any fuel lines. Use clean tools.

WARNING —
Fuel will be expelled when fuel lines are disconnected. Do not smoke or work near heaters or other fire hazards. Keep a fire extinguisher handy.

Fuel rail and injectors, removing (M20 engine)

1. Disconnect the negative (–) battery cable.
2. Remove the support bracket between the cylinder head cover and intake manifold.
3. Separate the injector harness connector working below the center of the intake manifold.
4. Disconnect the electrical connectors from the coolant temperature sensor and the coolant temperature gauge sender.
5. Carefully pry the injector wiring harness duct away from the injectors and remove the complete harness.
6. Remove the fuel rail mounting bolts (4). See Fig. 17.

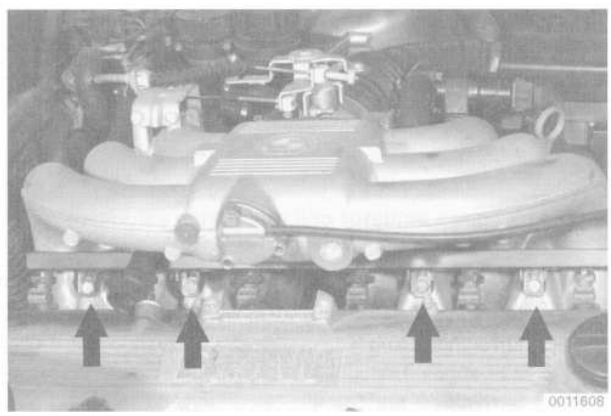

Fig. 17. Fuel rail mounting bolts (**arrows**) on M20 engine.

7. Pry up the fuel rail and remove individual injectors by removing the injector retaining clip and pulling the injector from the rail. See Fig. 18.

WARNING —
Fuel will be discharged. Do not disconnect any wires that could cause electrical sparks. Do not smoke or work near heaters or other fire hazards. Keep an approved fire extinguisher handy.

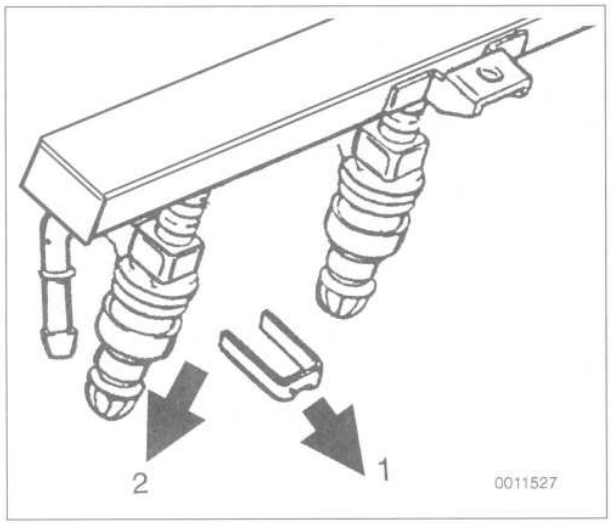

Fig. 18. Pry retaining clip from injector (**1**), then pull injector from rail (**2**).

Installation is the reverse of removal. Fit new O-rings when installing the injectors. For ease of installation, lightly lubricate the O-rings with SAE90 gear lube. Check that the injector electrical connections are correctly fitted and that the injectors are fully seated prior to installing the fuel rail mounting bolts. Reconnect all connectors and then reconnect negative (–) battery cable.

Tightening Torque

- Fuel rail to cylinder head . . . . . 10 Nm (89 in-lb)

Fuel rail and injectors, removing (M30 engine)

1. Disconnect the negative (–) battery cable.
2. Remove the large intake boot between the volume air flow sensor and the throttle housing. See Fig. 19.
3. Remove the screws from the injector wiring duct and remove the duct from above the injectors. See Fig. 20.
4. Remove the fuel rail mounting bolts (3).
5. Pry up the fuel rail and remove individual injectors by removing the injector retaining clip and pulling the injector from the rail.

WARNING —
Fuel will be discharged. Do not disconnect any wires that could cause electrical sparks. Do not smoke or work near heaters or other fire hazards. Keep an approved fire extinguisher handy.



Fig. 19. Disconnect hose clamps and remove idle air control valve mounting bracket (**arrows**) to remove intake air boot.

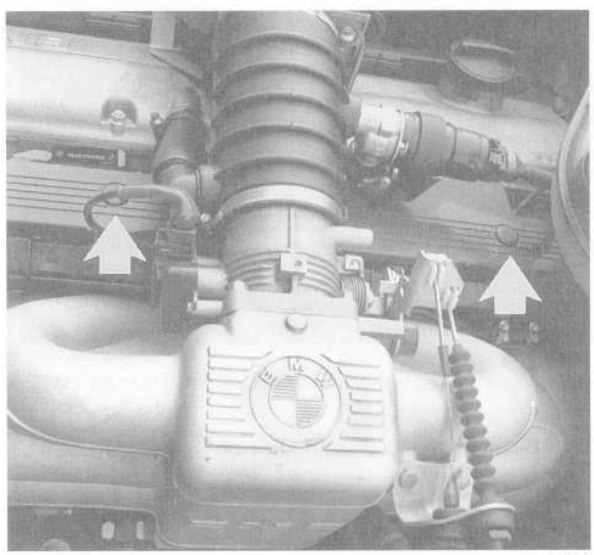

Fig. 20. Injector wiring duct retaining screws on M30 engine (**arrows**). Pry off caps to access allen screws.

Installation is the reverse of removal. Fit new O-rings when installing the injector. For ease of installation, lightly lubricate the O-rings with SAE90 gear lube. Check that the injector electrical connections are correctly fitted and that the injectors are fully seated prior to installing the fuel rail mounting bolts.

Tightening Torque

- Fuel rail to cylinder head . . . . . 10 Nm (89 in-lb)

Fuel rail and injectors, removing (M50 engine)

1. Disconnect the negative (–) battery cable.
2. Remove the plastic engine cover from the top of the engine.
3. Working at the end of the fuel rail, disconnect the small vacuum hose from the fuel pressure regulator.
4. Remove the two nuts from the injector duct. Carefully pry the injector wiring duct up off the injectors. See Fig. 21.



Fig. 21. Injector wiring harness duct being removed from M50 engine.

5. Disconnect the fuel supply line and fuel return line from ends of fuel rail.

> ***WARNING —***
> *Clamp off the fuel lines and then wrap a clean shop towel around the lines before removing them. Residual fuel pressure is present in the lines.*

6. Remove the fuel rail mounting bolts (2).
7. Pull up on the fuel rail and remove individual injectors by removing the injector retaining clip and pulling the injector from the rail.

> ***WARNING —***
> *Fuel will be discharged. Do not disconnect any wires that could cause electrical sparks. Do not smoke or work near heaters or other fire hazards. Keep an approved fire extinguisher handy.*

Installation is the reverse of removal. Fit new O-rings when installing the injectors. For ease of installation, lightly lubricate the O-rings with SAE90 gear lube. Check that the injector electrical connections are correctly fitted and that the injectors are fully seated prior to installing the fuel rail mounting bolts.

Tightening Torque

- Fuel rail to cylinder head . . . . . 10 Nm (89 in-lb)

Fuel rail and injectors, removing (M60 engine)

1. Disconnect the negative (–) battery cable.
2. Remove the plastic engine cover from the top of the engine.
   - Pry out cover caps and remove nuts from beneath caps. See Fig. 22.

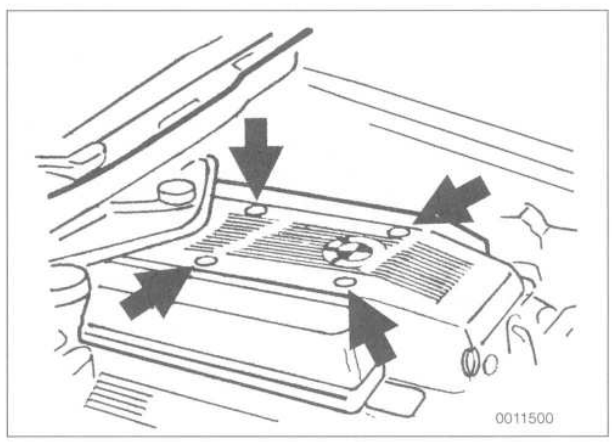

Fig. 22. On M60 engine, remove engine cover by prying out caps (**arrows**) and removing nuts below caps.

3. Remove the two plastic covers above each cylinder head cover. Disconnect the harness connectors from the ignition coils on left and right cylinder heads.
4. Disconnect the throttle cable from the throttle lever at the throttle housing, where applicable.
5. Cut wires ties, disconnect the harness connectors from the injectors and remove wiring ducts from the fuel rail area.
6. Disconnect the fuel supply and return line from either end of fuel rail.

> ***WARNING —***
> *Clamp off the fuel lines and then wrap a clean shop towel around the lines before removing them. Residual fuel pressure is present in the lines.*

7. Remove the fuel rail mounting bolts (4). See Fig. 23.

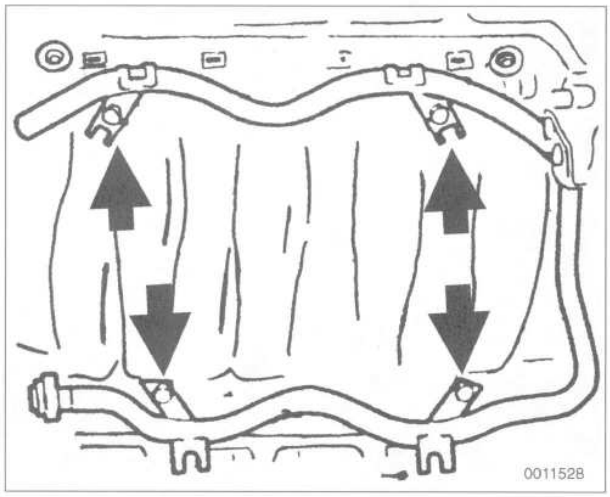

Fig. 23. Fuel rail mounting bolts (**arrows**) on M60 engine.

8. Pull up on the fuel rail and remove the rail with injectors. Remove the injector retaining clips and then pull the injectors from the fuel rail.

> ***WARNING —***
> *Fuel will be discharged. Do not disconnect any wires that could cause electrical sparks. Do not smoke or work near heaters or other fire hazards. Keep an approved fire extinguisher handy.*

Installation is the reverse of removal. Fit new O-rings when installing the injectors. For ease of installation, lightly lubricate the O-rings with SAE90 gear lube. Check that the injector electrical connections are correctly fitted and that the injectors are fully seated prior to installing the fuel rail mounting bolts. Replace wire ties.

Tightening Torque

- Fuel rail to cylinder head . . . . . 10 Nm (89 in-lb)

Fuel pressure regulator, replacing

> ***NOTE —***
> *Be sure the code number on old pressure regulator matches that of the new regulator.*

On M20 and M30 engines, the fuel pressure regulator attaches to the fuel rail with two bolts. Disconnect the vacuum hose and fuel return hose as shown in Fig. 24. Remove the bolts and then wrap a shop rag around the regulator. Pull the regulator from the fuel rail. Installation is the reverse of removal. Always replace O-rings.

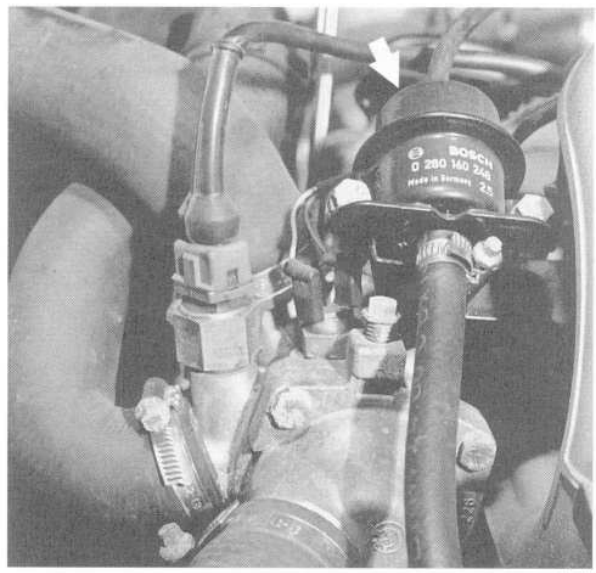

Fig. 24. Fuel pressure regulator (**arrow**) on M20 engine. M30 engine similar.

> ***WARNING —***
> *Fuel will be discharged. Do not disconnect any wires that could cause electrical sparks. Do not smoke or work near heaters or other fire hazards. Keep an approved fire extinguisher handy.*

On M50 and M60 engines, it will be necessary to remove the top engine cover(s) to access the fuel pressure regulator. The fuel pressure regulator is held to the fuel rail by either a ring clamp (1991-1993 models) or a locking ring (1994-1995 models). To remove the regulator, remove the clamp or the locking ring. See Fig. 25. Wrap a shop rag around the regulator and pull the regulator from the fuel rail. On M50 engines, disconnect the vacuum hose. Installation is the reverse of removal. Always replace O-rings.

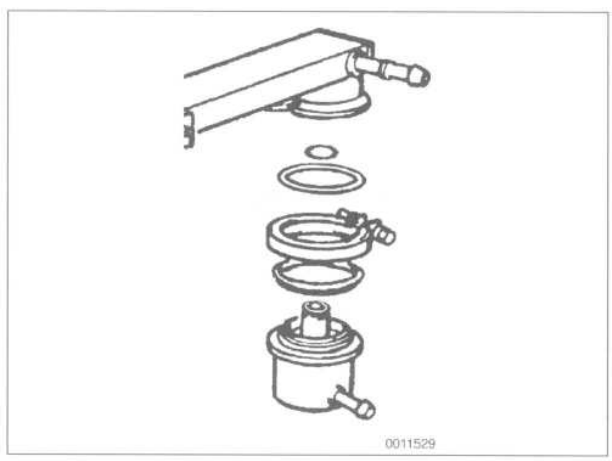

Fig. 25. Fuel pressure regulator ring clamp on 1991-1993 M50 engine. Later M50 and M60 engines use locking ring to retain fuel pressure regulator.

Idle speed control valve, replacing (M20 and M30 engines)

1. With the ignition key off, disconnect the harness connector from the idle speed control valve. See Fig. 26.



Fig. 26. Idle speed control valve (**arrow**).

2. Detach the rubber retaining strap from the valve's support bracket.

   NOTE —
   If installed, loosen hose clamps before removing the valve from the hoses.

3. Pull the idle speed control valve from its hoses.

4. Installation is reverse of removal.

   NOTE —
   Poor driveability may be noticed immediately after installing the replacement valve. After about 10 minutes of driving, the DME system will adapt the idle speed.

Idle speed control valve, replacing (M50 engines)

The idle speed control valve is mounted beneath the intake manifold. Accessing the valve is best accomplished by first removing the intake manifold.

NOTE —
It is recommended that the intake manifold gaskets be replaced whenever the intake manifold is removed.

1. Remove the top engine covers from the engine. See Fig. 27.



Fig. 27. Remove top engine covers by prying out caps and removing nuts (**A**). Note rubber gaskets at cover edge (**arrows**).

2. Remove the two hold down nuts from the fuel injector wiring duct. Pry back the injector connector retainers and lift off the wiring duct.

3. Disconnect the intake air boot from the throttle housing. Where applicable disconnect the accelerator cable and cruise control cable from their brackets.

4. Unbolt the intake manifold and move it out of the way enough to access the idle speed control valve.

   NOTE —
   The intake manifold is held in place with seven nuts from above and two support bracket bolts from underneath. Carefully disconnect the idle air hose from the intake manifold when lifting the manifold off. For more information, see **113 Cylinder Head Removal and Installation**.

5. Disconnect all necessary hoses and remove the idle speed control valve.

6. Installation is reverse of removal. Use new gaskets when installing the intake manifold.

   NOTE —
   Poor driveability may be noticed after installing a replacement idle speed control valve. After about 10 minutes of driving, the DME system will adapt the base setting of the valve and the idle speed should return to normal.

Tightening Torque

- Intake manifold to cylinder head . . . . . 15±2 Nm (11±1 ft-lb)

Idle speed control valve, replacing (M60 engines)

1. Remove the top engine cover. See Fig. 22.
2. Disconnect the intake air duct from the throttle housing and the idle speed control valve. Unclip the upper section of the air cleaner housing. Remove duct together with the upper air cleaner housing.
3. Detach the rubber retaining strap from the valve's support bracket.
4. Pull the idle speed control valve from its fittings.
5. Installation is reverse of removal. Check that the seals for the valve are clean and not damaged before installing the valve.

NOTE—

Poor driveability may be noticed immediately after installing the replacement valve. After about 10 minutes of driving, the DME system will adapt the base setting of the valve and the idle speed should return to normal.

Air flow sensor, replacing (M20 engine)

1. Disconnect the harness connector and the rubber intake air boot from the air flow sensor.
2. Remove the top section of the air cleaner housing together with the air flow sensor:
   - Release spring clips (4) from air cleaner top section
   - Remove bolt between air flow sensor and air cleaner housing
   - Loosen nut on side of air cleaner housing
3. Working inside the upper housing, remove the air flow sensor mounting screws.
4. Installation is the reverse of removal. No adjustment to the air flow sensor is necessary.

Air flow sensor, replacing (M30 engine)

1. Disconnect the harness connector and the intake air boots from the air flow sensor.
2. Working underneath the air flow sensor, remove sensor retaining clips and lift the sensor off it's mounts. See Fig. 28.
3. Installation is the reverse of removal. No adjustment to the air flow sensor is necessary.

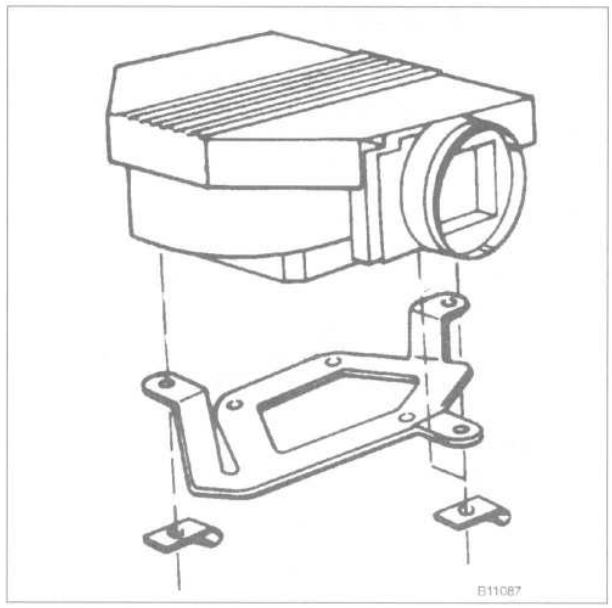

Fig. 28. Air flow sensor retaining clips on M30 engine.

Air flow sensor, replacing (M50 engines)

1. Disconnect the harness connector and the intake air boots from the air flow sensor.
2. Remove the two mounting screws (use 7-mm wrench) holding the air flow sensor to the air cleaner housing.
3. Installation is the reverse of removal. No adjustment to the air flow sensor is necessary.

Air flow sensor, replacing (M60 engines)

1. Disconnect the harness connector and the intake air boot from the air flow sensor.
2. Release the spring clips (4) that hold the top section of the air cleaner housing to the lower section and remove the top section.
3. Remove the two mounting screws from the air flow sensor. Twist the air flow sensor to remove.
4. Installation is the reverse of removal. No adjustment to the air flow sensor is necessary.

ECM PIN ASSIGNMENTS

ECM pin assignments are given in **Table e through h**. This information can be helpful when diagnosing faults to or from the ECM. If all inputs and wiring are OK but operational problems still exist, the ECM itself may be faulty.

Generally, absence of voltage or continuity means there is a wiring or connector problem. Test results with incorrect values do not necessarily mean that a component is faulty. Check for loose, broken or corroded connections and wiring before replacing components. If the results are still incorrect, test the component itself. For electrical schematics of the DME system, see **Electrical Wiring Diagrams**.

> ***CAUTION —***
> - *Always wait at least 40 seconds after turning off the ignition before removing the connector from the engine control module (ECM). If the connector is removed before this time, residual power in the system relay may damage the ECM.*
> - *Always connect or disconnect the control module connector and meter probes with the ignition off.*

When making checks at the ECM itself, a breakout box should be used to allow tests to be made with the connector attached to the ECM. This also prevents damage to the small terminals in the connector. As an alternative, the harness connector housing can be separated so that electrical checks can be made from the back of the connector.

The ECM is mounted in the right rear of the engine compartment, inside the electronics box (E-box). See Fig. 29. Terminal numbers are identified on the harness connector and/or on the ECM.

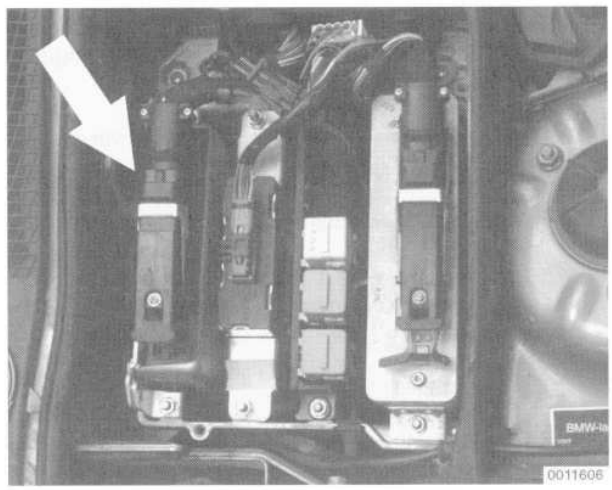

Fig. 29. DME engine control module harness connector (**arrow**).

> ***CAUTION —***
> *Use only a high-quality digital multimeter (DVOM) when making electrical checks at ECM or other solid state DME components.*

Table e. ECM Pin Assignment—DME 1.3

Pin	Signal	Component/function	Signal
1	output	Ignition coil	Ignition coil primary control
2	ground	Ground	Chassis ground
3	output	Fuel pump relay control	Fuel pump relay switches with engine running or cranking (crankshaft position signal must be present for relay to switch)
4	output	Idle speed control (vacant on 535i model with EML)	Pulsed ground (duty cycle) close signal (see also terminal 22)
5	output	Evaporative purge valve control	Pulsed ground (mapped) with engine running at normal temperature and varying engine load
6	output	Engine speed	RPM signal to instrument cluster
7	input	Volume air flow sensor	Voltage signal from volume air flow sensor (0-5 VDC, varies with engine load)
8	input	Cylinder identification	Voltage pulse (VAC) between pin 8 and pin 31 when cylinder no. 6 fires (for ignition control)
9	vacant	—	—
10		Oxygen sensor	Ground for oxygen sensor signal
11	vacant	—	—
12	output	Volume air flow sensor	Voltage supply (5 VDC) to volume air flow sensor
13	input	Diagnostic connector (RxD)	Diagnostic RxD (receive) signal to pin 15 in data link connector
14	ground	Fuel injectors	Ground for fuel injectors output stage
15	output	Check Engine	Check engine lamp control
16	output	Fuel injectors, cyl. 1,3,5	Pulsed ground (injection pulse width in ms)
17	output	Fuel injectors, cyl. 2, 4, 6	Pulsed ground (injection pulse width in ms)
18	input	Power supply (terminal 30)	Battery voltage (B+) at all times (terminal 30)
19	ground	Shielding ground	Ground for ECM and sensor shielding
20	vacant	—	—
21	vacant	—	—
22	output	Idle speed control (vacant on 535i models with EML)	Pulsed ground (duty cycle) open signal (see also terminal 4) —
23	vacant	—	—
24	ground	Output stage ground	Ground for output stages other than injectors and ignition
25	vacant	—	—
26	ground	Volume air flow sensor	Ground for volume air flow sensor
27	input	Power supply (terminal15)	Battery voltage (B+) with key on or engine running (terminal 15)
28	input	Oxygen sensor	Oxygen sensor signal wire (0-1 VDC fluctuating with engine running)
29	input	Vehicle speed (vacant on 535i model with EML)	Vehicle speed signal from instrument cluster
30	vacant	—	—
31	input	Cylinder identification sensor	Voltage pulse (VAC) between pin 8 and pin 31when cyl. no. 6 fires (for ignition control)
32	output	Fuel consumption (ti)	Fuel consumption output (KVA signal) to instrument cluster
33	vacant	—	—
34	vacant	—	—
35	vacant	—	—
36	output	Main relay	Main relay activation (relay terminal 85)
37	input	Main relay	Voltage supply from main relay to ECM (relay terminal 87)
38	input	On-board computer	Drive-away protection enable

continued on next page

Table e. ECM Pin Assignment—DME 1.3 (continued)

Pin	Signal	Component/function	Signal
39	input	Data link connector	Programming voltage
40	input	A/C compressor on (vacant on 535i model with EML)	A/C refrigerant pressure switch and compressor clutch
41	input	A/C on	Auxiliary fan on signal (via EML control module on 535i w/EML)
42	input	Automatic transmission (A/T) range switch	A/T park or neutral position signal
43	vacant	—	—
44		Intake air temperature	Intake air temperature via volume air flow sensor (0-5 V, temperature dependant)
45	input	Engine temperature (Intake air temperature on 535i w/EML)	Engine coolant temperature (0-5 V, temperature dependant) (Intake air temperature sensor on 535i w/EML)
46	vacant	—	—
47	input	Engine speed and crankshaft position sensor	Crankshaft position/rpm (voltage (VAC) between pins 47 and 48)
48	input	Engine speed and crankshaft position sensor	Crankshaft position/rpm (voltage (VAC) between pins 47 and 48)
49	vacant (input on 535i w/EML)	— (Engine torque reduction/cutout on 535i w/EML)	— (from slip control module on 535i w/EML)
50	vacant	—	—
51	input	Ignition timing intervention	from Automatic transmission control module
52	input	Throttle position	Ground with throttle in idle position via throttle position switch (via EML control module on 535i w/EML)
53	input	Throttle position	Ground with throttle in full open position via throttle position switch (via EML control module on 535i w/EML)
54	input	Torque converter clutch WK	Automatic transmission control module
55	input/output	Diagnostic connector (TxD)	Diagnostic TxD (transmit) and RxD (receive) signal to/from pin 20 in Data link connector

Table f. ECM Pin Assignment—DME 3.1

Pin	Signal	Component/function	Signal
1	output	Fuel pump relay control	Fuel pump relay switches with engine running or cranking (crankshaft position signal must be present for relay switchover)
2	output	Idle speed control valve	Pulsed ground– close signal (see also pin 29)
3	output	Fuel injector control, cyl. 1	Pulsed ground (injection pulse width in ms) with engine running
4	output	Fuel injector control, cyl. 3	Pulsed ground (injection pulse width in ms) with engine running
5	output	Fuel injector control, cyl. 2	Pulsed ground (injection pulse width in ms) with engine running
6	ground	Ground	Ground for fuel injector output stages
7	vacant	—	—
8	output	Check Engine	Check engine lamp control ground
9	vacant	—	—
10	vacant	—	—
11	output	Throttle valve position (load signal to transmission control module)	Voltage (pulse width modulated) depending on throttle position
12	input	Throttle position sensor	Voltage (0.4-4.2 VDC) varies with throttle position
13	output	Mass air flow sensor	Air flow sensor hot wire burn off (voltage for 0.5 seconds after shutdown)
14	ground	Mass air flow sensor	Ground for air flow sensor
15	vacant	—	—
16	input	Cylinder identification sensor	A/C voltage pulse per camshaft revolution (between pin 16 and 44)
17	output	Fuel consumption (ti)	Fuel consumption output (KVA signal) to instrument cluster
18	vacant	—	—
19	vacant	—	—
20	vacant	—	—
21	vacant	—	—
22	vacant	—	—
23	output	Ignition control (terminal 1), cyl. no. 2	Primary signal, ignition coil cyl. no. 2
24	output	Ignition control (terminal 1), cyl. no. 3	Primary signal, ignition coil cyl. no. 3
25	output	Ignition control (terminal 1), cyl. no. 1	Primary signal, ignition coil cyl. no. 1
26	input	Power supply (terminal 30)	Battery voltage (B+) at all times (terminal 30)
27	output	Main relay control	Main relay activation (to relay terminal 85)
28	ground	Ground	Ground for ECM and sensor shielding
29	output	Idle speed control valve	Pulsed ground– open signal (see also pin 2)
30	vacant	—	—
31	output	Fuel injector, cyl. no. 5	Pulsed ground (injection pulse width in ms), cyl. no. 5
32	output	Fuel injector, cyl. no. 6	Pulsed ground (injection pulse width in ms), cyl. no. 6
33	output	Fuel injector, cyl. no. 4	Pulsed ground (injection pulse width in ms), cyl. no. 4
34	ground	Ground	Ground for output stages other than fuel injection and ignition
35	vacant		
36	output	Evaporative purge valve control	Pulsed ground with engine at normal temperature and varying engine load
37	output	Oxygen sensor heater relay control	Oxygen sensor heater relay activation (ground at terminal 85)
38	vacant	—	—
39	vacant	—	—
40	vacant	—	—
41	input	Mass air flow sensor	Voltage (0-5 VDC) varies with engine load
42	vacant	—	—
43	ground	Ground	Ground for temperature sensors (ECT sensor, IAT sensor)

continued on next page

Table f. ECM Pin Assignment—DME 3.1 (continued)

Pin	Signal	Component/function	Signal
44	input	Cylinder identification sensor	A/C voltage pulse per camshaft revolution (between pin 16 and 44)
45	vacant	—	—
46	vacant	—	—
47	vacant	—	—
48	output	A/C compressor control	A/C compressor disabled via compressor control relay with ground present
49	vacant	—	—
50	output	Ignition control (terminal 1), cyl. no. 4	Primary signal, ignition coil cyl. no. 4
51	output	Ignition control (terminal 1), cyl. no. 6	Primary signal, ignition coil cyl. no. 6
52	output	Ignition control (terminal 1), cyl. no. 5	Primary signal, ignition coil cyl. no. 5
53	vacant	—	—
54	input	Power supply	Battery voltage (+) from main relay terminal 87
55	ground	Ground	Ground for ignition control
56	input	Power supply (terminal 15)	Battery voltage (+) with key on or engine running
57	vacant	—	—
58	vacant	—	—
59	output	Throttle position sensor	Throttle position sensor supply voltage (5 VDC)
60	input	Data link connector	Programming voltage
61	vacant	—	—
62	vacant	—	—
63	vacant	—	—
64	input	Ignition timing intervention	from A/T control module (only active during gearshift)
65	input	Automatic transmission (A/T) range switch	Ground when transmission is in park or neutral
66	vacant	—	—
67	input	Engine speed/crankshaft position sensor	Crankshaft position/rpm (voltage (VAC) between pins 67 and 68)
68	input	Engine speed/crankshaft position sensor	Crankshaft position/rpm (voltage (VAC) between pins 67 and 68)
69	vacant	—	—
70	input	Oxygen sensor	oxygen sensor signal (0–1 VDC fluctuating with engine running)
71	ground	Oxygen sensor	oxygen sensor signal ground
72	vacant	—	—
73	input	Road speed	Road speed signal from instrument cluster
74	output	Engine speed (TD)	Engine speed (TD) signal to instrument cluster
75	vacant	—	—
76	vacant	—	—
77	input	Intake air temperature (IAT) sensor	Intake air temperature (0-5 V, temperature dependant)
78	input	Engine coolant temperature (ECT) sensor	Engine coolant temperature (0-5 V, temperature dependant)
79	vacant	—	—
80	vacant	—	—
81	input	On-board computer	Drive-away protection enable
82	vacant	—	—
83	vacant	—	—
84	vacant	—	—
85	input	A/C pressure switch	from Integrated climate control module via A/C pressure switch
86	input	A/C compressor on	from Integrated climate control module
87	input	Diagnostic connector (RxD)	Diagnostic RxD (receive) signal to pin 15 in Data link connector
88	input/output	Diagnostic connector (TxD)	Diagnostic TxD (transmit) signal to pin 20 in Data link connector

Table g. ECM Pin Assignment—DME 3.3

Pin	Signal	Component/function	Signal
1	output	Fuel pump relay control	Fuel pump relay switches with engine running or cranking (crankshaft position signal must be present for relay switchover)
2	output	Idle speed control valve	Pulsed ground—close signal (see also pin 29)
3	output	Fuel injector control, cyl. 1	Pulsed ground (injection pulse width in ms) cyl. 1
4	output	Fuel injector control, cyl. 4	Pulsed ground (injection pulse width in ms) cyl. 4
5	output	Fuel injector control, cyl. 6	Pulsed ground (injection pulse width in ms) cyl. 6
6	ground	Ground	Ground for fuel injector output stage
7	output	Fuel injector control, cyl. 7	Pulsed ground (injection pulse width in ms) cyl. 6
8	output	Check Engine	Instrument cluster, Check Engine lamp
9	vacant	—	—
10	vacant	—	—
11	output	Throttle position	Throttle angle signal to slip control module
12	input	Oxygen sensor #2	Oxygen sensor #2 signal (0-1 VDC fluctuating with engine running)
13	input	Oxygen sensor #1	Oxygen sensor #1 signal (0-1 VDC fluctuating with engine running)
14	ground	Mass air flow sensor	Ground for mass air flow sensor
15	ground	Ignition circuit	Ground for ignition circuit monitoring
16	input	Crankshaft position/rpm sensor	Voltage pulse (VAC) between pin 16 and 43)
17	input	Camshaft position sensor	Voltage pulse (VAC) between pin 17 and 44)
18	vacant	—	—
19	vacant	—	—
20	vacant	—	—
21	vacant	—	—
22	output	Ignition coil control, cyl. 7	Primary signal, ignition coil 7
23	output	Ignition coil control, cyl. 6	Primary signal, ignition coil 6
24	output	Ignition coil control, cyl. 4	Primary signal, ignition coil 4
25	output	Ignition coil control, cyl. 1	Primary signal, ignition coil 1
26	input	Power supply (terminal 30)	Battery voltage (B+) at all times
27	input	Main relay control	Main relay activation (terminal 85)
28	ground	Ground	Ground for ECM and sensor shielding
29	output	Idle speed control valve	Pulsed ground—open signal (see also pin 2)
30	vacant	—	—
31	output	Fuel injector control, cyl. 5	Pulsed ground (injection pulse width in ms) cyl. 5
32	output	Fuel injector control, cyl. 8	Pulsed ground (injection pulse width in ms) cyl. 8
33	output	Fuel injector control, cyl. 3	Pulsed ground (injection pulse width in ms) cyl. 3
34	ground	Ground	Ground for remaining output stages
35	output	Fuel injector control, cyl. 2	Pulsed ground (injection pulse width in ms) cyl. 2
36	output	Evaporative purge valve control	Pulsed ground with engine at normal temperature and varying engine load
37	output	Oxygen sensor relay control	Oxygen sensor relay switchover (to terminal 85)
38	vacant	—	—
39	ground	Oxygen sensor	Oxygen sensor #2 signal ground
40	ground	Oxygen sensor	Oxygen sensor #1 signal ground
41	input	Mass air flow sensor	Mass air flow voltage signal (0-5 VDC, varies with engine load)
42	input	Road speed	Road speed signal from instrument cluster
43	input	Crankshaft position/rpm sensor	Voltage pulse (VAC) between pin 16 and 43)
44	input	Camshaft position sensor	Voltage pulse (VAC) between pin 17 and 44)

continued on next page

Table g. ECM Pin Assignment—DME 3.3 (continued)

Pin	Signal	Component/function	Signal
45	ground	Ignition circuit	Ground for ignition circuit monitoring
46	output	Fuel consumption (KVA signal)	Fuel consumption output to instrument cluster
47	output	Engine speed (TD)	Engine speed (TD) signal to instrument cluster
48	output	A/C compressor control	A/C compressor disable via A/C compressor relay
49	output	Ignition coil control, cyl. 2	Primary signal, ignition coil 2
50	output	Ignition coil control, cyl. 3	Primary signal, ignition coil 3
51	output	Ignition coil control, cyl. 8	Primary signal, ignition coil 8
52	output	Ignition coil control, cyl. 5	Primary signal, ignition coil 5
53	vacant	—	—
54	input	Power supply	Battery voltage from main relay (terminal 87)
55	ground	Ground	Ground for ignition control
56	input	Power supply (terminal 15)	Battery voltage with key on or engine running
57	vacant	—	—
58	vacant	—	—
59	output	Throttle position sensor (TPS)	Voltage supply to TPS (5 VDC)
60	input	Programming voltage	Programming voltage via data link connector
61	vacant	—	—
62	output	Electronic throttle control (S-EML)	to Traction control module
63	vacant	—	—
64	input	A/C on signal	from integrated climate control module
65	input	A/C compressor signal	from integrated climate control module via A/C pressure switch
66	input	On-board computer	Drive-away protection enable
67	input	Knock sensor #4	Knock sensor #4 signal
68	input	Knock sensor #3	Knock sensor #3 signal
69	input	Knock sensor #2	Knock sensor #2 signal
70	input	Knock sensor #1	Knock sensor #1 signal
71	ground	Ground	Ground for analog signals and knock sensors
72	vacant	—	—
73	input	Throttle position sensor (TPS)	Throttle position signal
74	vacant	—	—
75	vacant	—	—
76	vacant	—	—
77	input	Intake air temperature sensor	Intake air temperature signal (0-5 VDC, temperature dependant)
78	input	Engine coolant temperature sensor	Engine coolant temperature signal (0-5 VDC, temperature dependant)
79	vacant	—	—
80	vacant	—	—
81	input	Light switch	
82	input	Engine drag torque control	from Traction control module
83	input	Drive slip control	from Traction control module
84	output	Central area network (CAN)	CAN shield to A/T transmission control module
85	input/output	Central area network (CAN-L)	A/T transmission control module connection
86	input/output	Central area network (CAN), H-bus	A/T transmission control module connection
87	input	Diagnostic connector (RxD)	Diagnostic RxD (receive) signal to pin 15 in Data link connector
88	input/output	Diagnostic connector (TxD)	Diagnostic TxD (transmit) signal to pin 20 in Data link connector

Table h. ECM Pin Assignment—DME 3.3.1

Pin	Signal	Component/function	Signal
1	output	Fuel pump relay control	Fuel pump relay switches with engine running or cranking (crankshaft position signal must be present for relay switchover)
2	output	Idle speed control valve	Pulsed ground—close signal (see also pin 29)
3	output	Fuel injector control, cyl. 5	Pulsed ground (injection pulse width in ms) cyl. 5
4	output	Fuel injector control, cyl. 6	Pulsed ground (injection pulse width in ms) cyl. 6
5	output	Fuel injector control, cyl. 4	Pulsed ground (injection pulse width in ms) cyl. 4
6	ground	Ground	Ground for fuel injector output stage
7	output	Camshaft actuator (VANOS solenoid) control	Camshaft actuator (VANOS solenoid)
8	output	Check Engine	Instrument cluster, Check Engine lamp
9	vacant	—	—
10	vacant	—	—
11	output	Throttle position	Throttle angle signal to A/T control module
12	vacant	—	—
13	input	Oxygen sensor	Oxygen sensor signal (0-1 VDC fluctuating with engine running)
14	ground	Mass air flow sensor	Ground for mass air flow sensor
15	ground	Ground	Ground
16	input	Crankshaft position/rpm sensor	Voltage pulse (VAC) between pin 16 and 43)
17	input	Camshaft position sensor	Hall effect camshaft sensor
18	vacant	—	—
19	vacant	—	—
20	vacant	—	—
21	vacant	—	—
22	vacant	—	—
23	output	Ignition coil control, cyl. 4	Primary signal, ignition coil 4
24	output	Ignition coil control, cyl. 6	Primary signal, ignition coil 6
25	output	Ignition coil control, cyl. 5	Primary signal, ignition coil 5
26	input	Power supply (terminal 30)	Battery voltage (B+) at all times
27	input	Main relay control	Main relay activation (terminal 85)
28	ground	Ground	Ground for ECM and sensor shielding
29	output	Idle speed control valve	Pulsed ground—open signal (see also pin 2)
30	vacant	—	—
31	output	Fuel injector control, cyl. 3	Pulsed ground (injection pulse width in ms) cyl. 3
32	output	Fuel injector control, cyl. 2	Pulsed ground (injection pulse width in ms) cyl. 2
33	output	Fuel injector control, cyl. 1	Pulsed ground (injection pulse width in ms) cyl. 1
34	ground	Ground	Ground for remaining output stages
35	vacant	—	—
36	output	Evaporative purge valve control	Pulsed ground with engine at normal temperature and varying engine load
37	vacant	—	—
38	output	Oxygen sensor heater relay control	Oxygen sensor heater relay switchover (to terminal 85)
39	vacant	—	—
40	ground	Oxygen sensor	Oxygen sensor signal ground
41	input	Mass air flow sensor	Mass air flow voltage signal (0-5 VDC, varies with engine load)
42	input	Vehicle speed	Vehicle speed signal from instrument cluster
43	input	Crankshaft position/rpm sensor	Voltage pulse (VAC) between pin16 and 43)

continued on next page

Table h. ECM Pin Assignment—DME 3.3.1 (continued)

Pin	Signal	Component/function	Signal
44	ground	Ground	Ground for intake air temp. sensor, engine coolant temp. sensor, throttle position sensor
45	ground	Ignition circuit	Ground for ignition circuit monitoring
46	output	Fuel consumption (KVA signal)	Fuel consumption output to instrument cluster
47	output	Engine speed (TD)	Engine speed (TD) signal to instrument cluster
48	output	A/C compressor control	A/C compressor disable via A/C compressor relay
49	vacant	—	—
50	output	Ignition coil control, cyl. 1	Primary signal, ignition coil 1
51	output	Ignition coil control, cyl. 2	Primary signal, ignition coil 2
52	output	Ignition coil control, cyl. 3	Primary signal, ignition coil 3
53	vacant	—	—
54	input	Power supply	Battery voltage from main relay (terminal 87)
55	ground	Ground	Ground for ignition control
56	input	Power supply (terminal 15)	Battery voltage with key on or engine running
57	input	Ignition timing intervention	from A/T control module (only active during gearshift)
58	vacant	—	—
59	output	Throttle position sensor (TPS)	Voltage supply to TPS (5 VDC)
60	input	Programming voltage	Programming voltage via data link connector
61	vacant	—	—
62	output	Throttle position signal	to Slip control module
63	vacant	—	—
64	input	A/C on signal	from integrated climate control module
65	input	A/C compressor signal	from integrated climate control module via A/C pressure switch
66	input	On-board computer	Drive-away protection enable
67	vacant	—	—
68	vacant	—	—
69	input	Knock sensor #2 (cyl. 4,5,6)	Knock sensor #2 signal
70	input	Knock sensor #1 (cyl. 1,2,3)	Knock sensor #1 signal
71	ground	Ground	Ground for analog signals and knock sensors
72	vacant	—	—
73	input	Throttle position sensor (TPS)	Throttle position signal
74	vacant	—	—
75	vacant	—	—
76	vacant	—	—
77	input	Intake air temperature sensor	Intake air temperature signal (0-5 VDC, temperature dependant)
78	input	Engine coolant temperature sensor	Engine coolant temperature signal (0-5 VDC, temperature dependant)
79	vacant	—	—
80	vacant	—	—
81	input	Automatic transmission (A/T) range switch	A/T park or neutral position signal
82	input	Electronic throttle control (angle decrease)	from Slip control module
83	input	Electronic throttle control (angle increase)	from Slip control module
84	vacant	—	—
85	vacant	—	—
86	vacant	—	—
87	input	Diagnostic connector (RxD)	Diagnostic RxD (receive) signal to pin 15 in Data link connector
88	input/output	Diagnostic connector (TxD)	Diagnostic TxD (transmit) signal to pin 20 in Data link connector

160 Fuel Tank and Fuel Pump

GENERAL 160-1

FUEL TANK AND LINES 160-1
Fuel tank, removing 160-2
Fuel level sender and fuel pump, removing . . 160-3
Fuel level sender, testing 160-4

FUEL PUMP 160-4
Fuel Pump Fuse and Relay 160-4
Operating Fuel Pump for Tests 160-5
Fuel Pump Tests 160-5
Fuel pump electrical circuit, checking 160-6
Fuel pump delivery pressure and delivery rate, checking 160-6
Fuel pump power consumption, checking 160-7

TABLES
a. Fuel Level Sender Resistances 160-4
b. Fuel Pressure Specifications 160-6
c. Fuel Pump Current 160-7

GENERAL

This repair group covers service information specifically for the fuel pump, tank, filter, and fuel lines. Information on the fuel injection system is covered in **130 Fuel Injection–DME**.

NOTE—
Fuel filter replacement is also covered in **020 Maintenance Program**.

The following cautions and warnings should be observed when servicing the fuel system.

WARNING—
- *The fuel system is designed to retain pressure even when the ignition is off. When working with the fuel system, loosen the fuel lines slowly to allow residual fuel pressure to dissipate gradually. Avoid spraying fuel.*
- *Before beginning any work on the fuel system, place a fire extinguisher in the vicinity of the work area.*
- *Fuel is highly flammable. When working around fuel, do not disconnect any wires that could cause electrical sparks. Do not smoke or work near heaters or other fire hazards.*
- *Always unscrew the fuel tank cap to release pressure in the tank before working on the tank or lines.*
- *Do not use a work light near any fuel. Fuel may spray onto the hot bulb causing a fire.*
- *Make sure the work area is properly ventilated.*

CAUTION—
- *Before making any electrical tests with the ignition turned on, disable the ignition system as described in* **Ignition System–DME**. *Be sure the battery is disconnected when replacing components.*
- *To prevent damage to the ignition system or the electronic fuel system components, including the control unit, always connect and disconnect wires and test equipment with the ignition off.*
- *Cleanliness is essential when working with the fuel system. Thoroughly clean the fuel line unions before disconnecting any of the lines.*
- *Use only clean tools. Keep removed components clean and sealed or covered with a clean, lint-free cloth, especially if completion of the repair is delayed.*
- *Avoid nearby use of compressed air, and do not move the car while the fuel system is open.*
- *Avoid using high pressure compressed air to blow out lines and components. High pressure can rupture internal seals and gaskets.*
- *Always replace seals and O-rings.*

FUEL TANK AND LINES

The metal fuel tank is located at the rear of the car beneath the luggage compartment. The tank capacity is 81 liters (21.4 gallons). Mounted in the fuel tank are the fuel level sender and the fuel pump. Connecting lines for the evaporative emission control system and expansion tank are also attached to the tank. See Fig. 1.

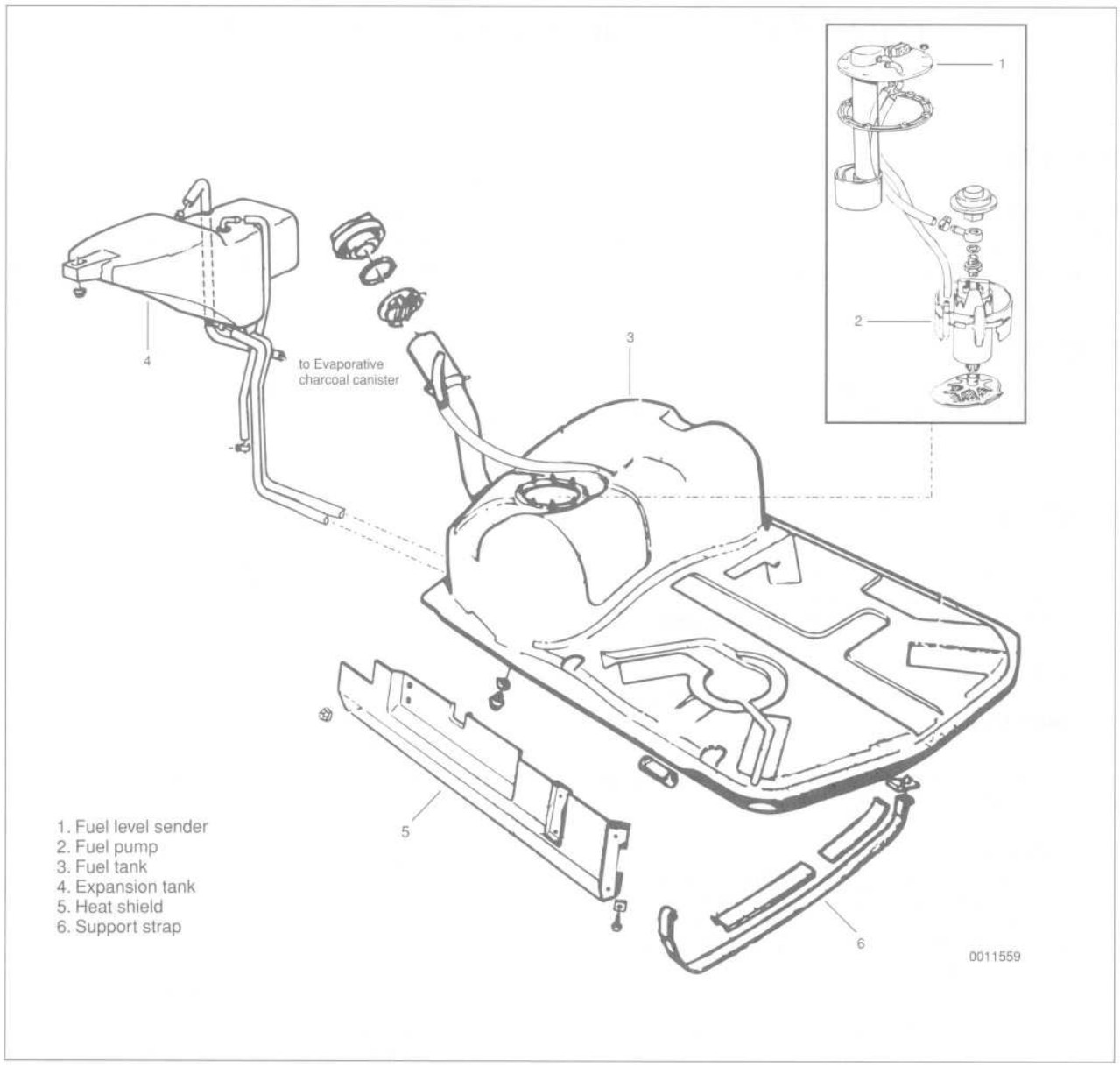

Fig. 1. Fuel tank assembly.

Fuel tank, removing

The fuel tank should be emptied into a storage unit or another car's fuel tank prior to removal. Use an approved transfer pump and container. The fuel can be pumped out via a hose inserted in the filler neck. The tank can also be drained through the drain plug in the bottom of the tank.

> ***WARNING —***
> *Before removing the tank, be sure that all hot components such as the exhaust system are completely cooled down.*

1. Disconnect the negative (–) battery cable.
2. Remove the fuel tank filler cap and empty the fuel tank using an approved evacuation or draining method.
3. Working in the luggage compartment, remove the floor carpeting. Then remove the access cover above the fuel pump/fuel level sender.
4. Label and then remove the two hoses and the harness connector from the fuel pump/level sender assembly. See Fig. 2.

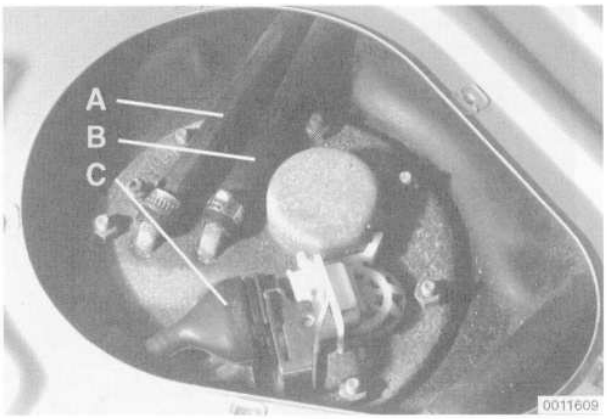

Fig. 2. Fuel pump/fuel level sender assembly in top of fuel tank. Disconnect supply hose (**A**), return hose (**B**) and harness connector (**C**).

5. Working from within the fuel filler door, pry out the rubber sealing gasket from the filler neck.

6. Remove the wheel housing trim from the right rear wheel housing. Then disconnect the two vent hoses from the expansion tank and remove the expansion tank mounting bolts. See Fig. 3.

   NOTE —
   Remove the right rear road wheel as necessary for removal of the wheel housing trim.

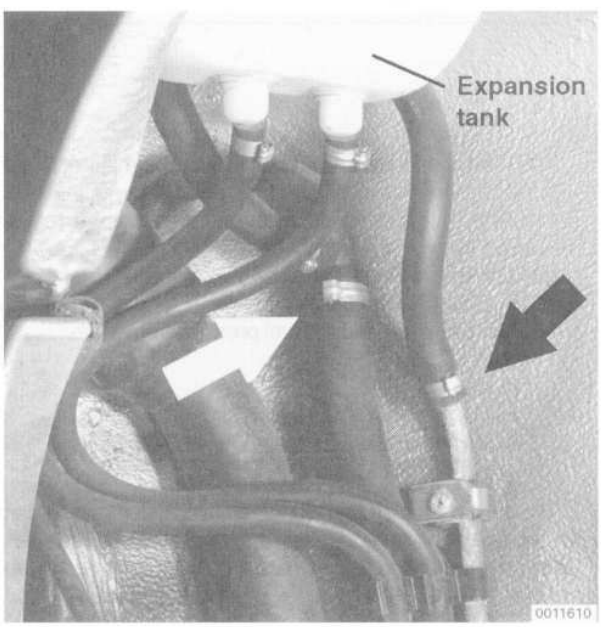

Fig. 3. Expansion tank vent hoses and bolts to be removed (**arrows**).

7. While supporting the tank from below, remove the fuel tank heat shield and support strap mounting bolts. See Fig. 1. Carefully lower the tank from the car.

Installation is the reverse of removal. Always use new seals, gaskets, O-rings, and hose clamps. Inspect all rubber parts including hoses and replace any that are chafed, dried out or cracked. Inspect the heat shield and replace if corroded or damaged.

Inspect the rubber buffers and liners on the fuel tank, the support straps and on the underside of the body. Replace rubber parts that are hardened or damaged.

Tightening Torques

- Fuel level sender/fuel pump to fuel tank
  M6 nut . . . . . 10 Nm (89 in-lb)
  M8 bolt . . . . . 23 Nm (17 ft-lb)
- Fuel tank to body . . . . . 23 Nm (17 ft-lb)
- Heat shield to fuel tank (bolts) . . . . . 10 Nm (89 in-lb)
- Fuel tank drain plug
  (with new seal ring) . . . . . 25 Nm (18 ft-lb)
- Hose clamps
  10 mm to 16 mm diameter . . . . . 2.0 Nm (18 in-lb)

Fuel level sender and fuel pump, removing

The fuel level sender is mounted in the fuel tank together with the fuel pump. The sender has a float connected to a variable resistance for fuel level, and a switch that closes to turn on the low fuel light. When replacing the sender/pump assembly always replace hose clamps, gaskets and O-rings.

> *WARNING —*
> *When removing the fuel level sender or the fuel pump, the fuel tank should be emptied.*

1. Disconnect the negative (–) battery cable.

2. Drain the fuel from the tank as described above in **Removing and Installing Fuel Tank**.

   > *WARNING —*
   > *Always unscrew the fuel tank cap to release pressure in the tank before working on the tank or lines.*

3. Working in the luggage compartment, remove the access cover from above the fuel pump/sender assembly.

4. Label and then remove the fuel hoses and harness connector from the fuel sender. Unscrew the mounting nuts or bolts from the fuel level sender. See Fig. 4.

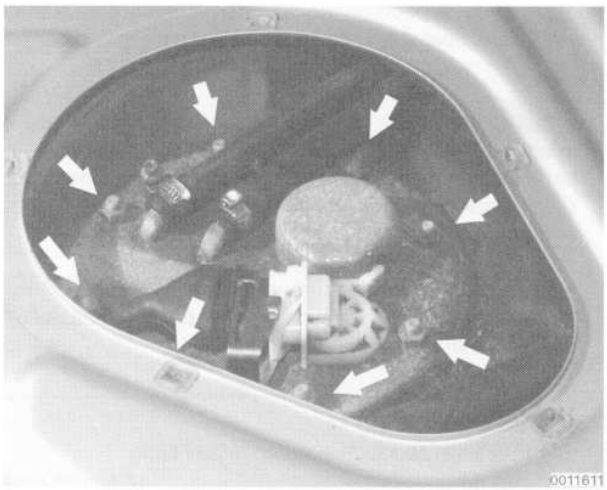

Fig. 4. Fuel level sender mounting nuts (**arrows**).

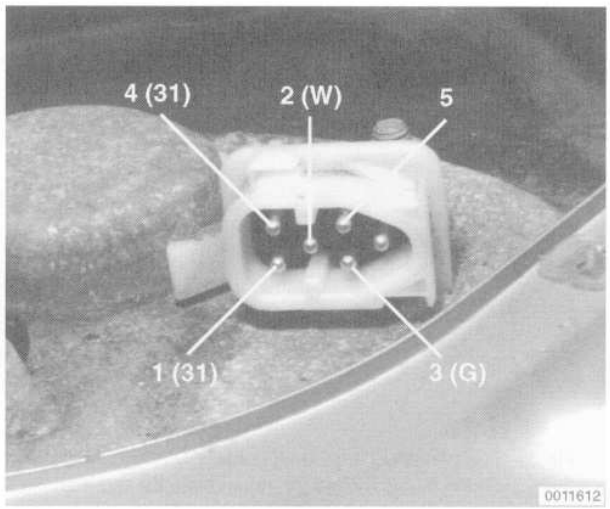

Fig. 5. Fuel pump/level sender terminal identification.

5. Slowly withdraw the sender from the tank, allowing fuel to drain off slowly. Release the fuel pump retaining hooks and remove the pump, allowing fuel to drain off. Discard the gasket.

> ***WARNING —***
> *Fuel may be spilled. Do not smoke or work near heaters or other fire hazards.*

6. Install the fuel pump so that the pump retaining hooks are correctly fitted. Install the fuel level sender using a new gasket.

Tightening Torques

- Fuel level sender/fuel pump to fuel tank
  M6 (nut) . . . . . 10 Nm (89 in-lb)
  M8 (bolt) . . . . . .23 Nm (17 ft-lb)
- Hose clamps
  10mm to 16mm diameter. . . . . .2.0 Nm (18 in-lb)

7. Reconnect the harness connector and hoses. Fill the tank and check for leaks by running the engine. Install the access cover and its mounting screws. Reconnect the negative (–) battery cable.

Fuel level sender, testing

The removed sender can be tested using an ohmmeter. See Fig. 5. **Table a** lists resistance values for the sender at various float positions.

Table a. Fuel Level Sender Resistances

Connector terminals	Float position	Test result (ohms)
G and 31	slowly moving from empty to full position	resistance continuously changing (no breaks)
	Empty	88.7 ± 2.8 ohms
	Full	3.2 ± 0.7 ohms
W and 31	Empty (low fuel warning)	continuity

FUEL PUMP

The electric fuel pump is mounted in the fuel tank together with the fuel level sender. The fuel pump delivers fuel at high pressure to the fuel injection system. A pressure regulator maintains system pressure. The quantity of fuel supplied exceeds demand, so excess fuel returns to the fuel tank via a return line. See **130 Fuel Injection–DME** for more information on system pressure and the fuel pressure regulator.

> ***NOTE —***
> *Fuel pump removal procedures are given earlier under* **Fuel level sender and fuel pump, removing**.

The pump is cooled and lubricated by fuel and may therefore be damaged if allowed to run dry or if the fuel pickup strainer/filter becomes blocked. Access to the pump is from the top of the fuel tank through the luggage compartment.

Fuel Pump Fuse and Relay

The main fuel pump is operated by a fuel pump relay located in the electronics box (E-box). The E-box is in the right rear corner of the engine compartment. See Fig. 6. The fuel pump circuit is protected by fuse no. 23 located in the main fuse box.

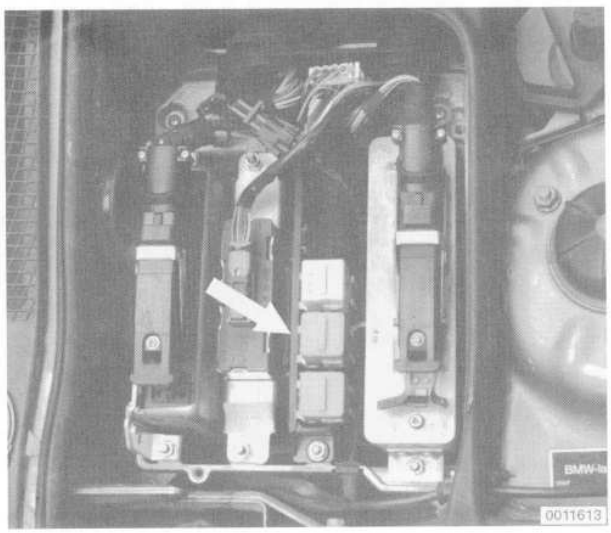

Fig. 6. Fuel pump relay location (**arrow**) in electronics box (E-box). V8 relay position varies. Check sticker on E-box cover for V8 position.

The DME engine control module (ECM) and the DME main relay supply power to the coil side of the fuel pump relay. During starting, the fuel pump runs as long as the ignition switch is in the start position and continues to run once the engine starts. If an electrical system fault interrupts power to the fuel pump, the engine will not run.

Operating Fuel Pump for Tests

To operate the fuel pump for testing purposes without having to run the engine, the relay can be bypassed to power the pump directly.

To run the fuel pump, remove the relay and connect the socket for relay terminal 30 to the socket for relay terminal no. 87 with a fused jumper wire. Fig. 7 shows relay terminal designations. After completing the tests, remove the jumper wire.

CAUTION —

Relay locations may vary. Use care when identifying relays and when troubleshooting the electrical system at the fuse/relay panel. The fuel pump relay is a four pin relay and has a 1.5 mm² red wire at terminal 30 in the relay socket. If in doubt, consult an authorized BMW dealer.

NOTE —

The jumper wire should be 1.5 mm² (14 ga.) and include an in-line fuse holder with a 16 amp fuse. To avoid fuse/relay panel damage from repeated connecting and disconnecting, also include a toggle switch. A heavy-duty jumper, BMW tool no. 61 3 050, is also available from an authorized BMW dealer.

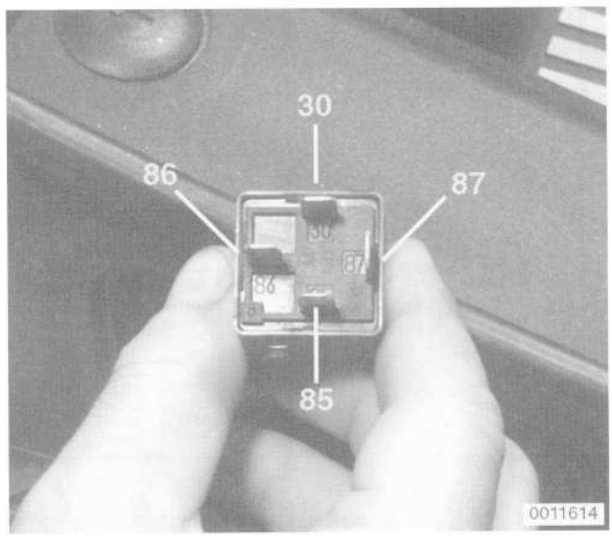

Fig. 7. Fuel pump relay terminal identification.

If the pump does not run with the jumper installed, the fault could be in the fuel pump or the wiring to the pump. Check the pump and its wiring as described below.

Fuel Pump Tests

Troubleshooting of any fuel pump fault should begin with checking the fuel pump fuse and the fuel pump relay. The DME main relay should also be checked. Fuel pressure and rate of fuel delivery are the important fuel pump performance measurements.

NOTE —

Special tools are required for some of the tests described here.

Fuel pump electrical circuit, checking

Fig. 8 shows a schematic of the fuel pump electrical circuit.

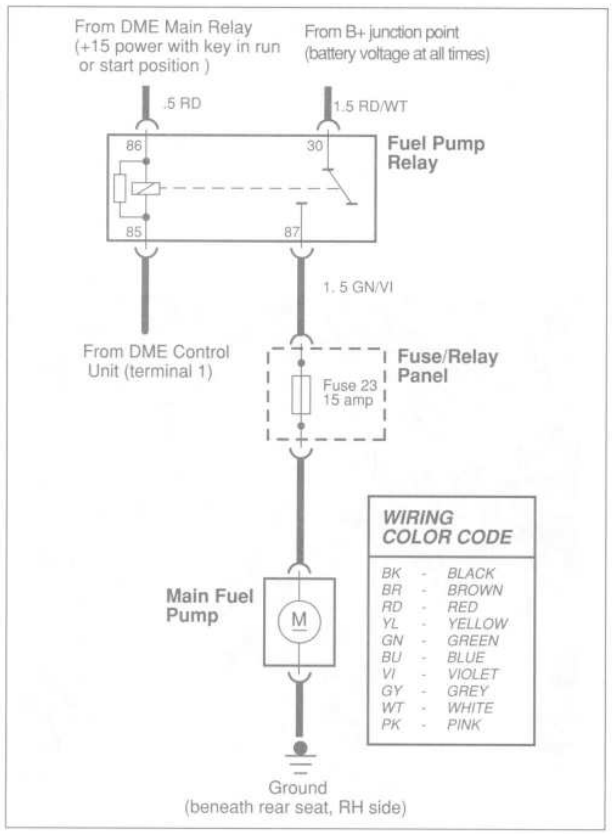

Fig. 8. Fuel pump electrical circuit.

> ***CAUTION —***
> *Fuse and relay locations may vary. Use care when troubleshooting the electrical system at the fuse/relay panel. To resolve problems in identifying a relay, see an authorized BMW dealer.*

1. Working from the luggage compartment, remove the floor carpeting. Then remove the access cover from above the fuel pump/sender assembly.

2. Remove the fuel pump relay and operate the fuel pump as described under **Operating Fuel Pump for Tests**.
   - The pump should run. Disconnect the jumper wire when finished.
   - If the fuel pump does not run, disconnect the harness connector from the pump. With the jumper wire connected as described in step 2 above, check for positive (+) battery voltage at terminal 5 and ground (–) at terminal 4. See Fig. 9.
     If voltage and ground are present, the fuel pump is probably faulty. If there is no voltage, check the wiring from the fuel pump relay and make sure the relay is functioning correctly.

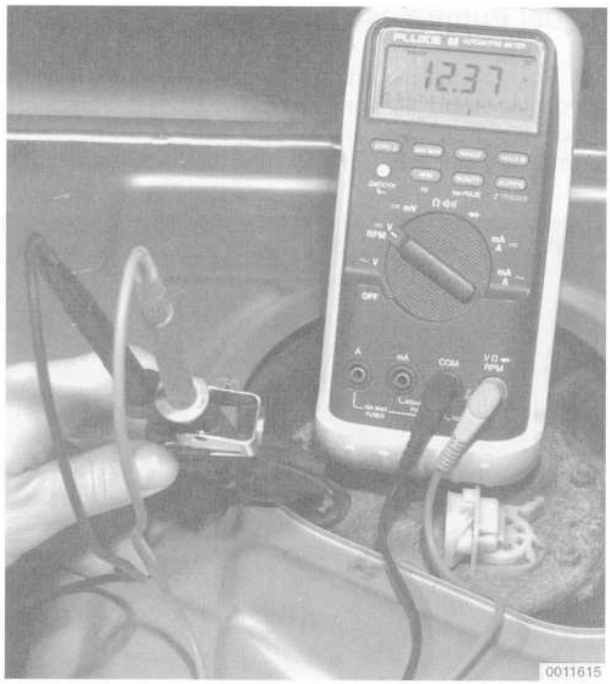

Fig. 9. Voltage supply to fuel pump being checked at harness connector terminals 4 (–) and 5 (+).

Fuel pump delivery pressure and delivery rate, checking

> ***CAUTION —***
> *The fuel pump is capable of developing a higher pressure than that regulated by the pressure regulator. In the event the fuel pump check valve is faulty (stuck closed), make sure the fuel pressure does not rise above 6.0 bar (87 psi). Damage to the fuel lines or fuel system components could result.*

1. Remove the fuel tank filler cap.

2. Check fuel pump delivery pressure:
   - Connect in-line a T-fitting and fuel pressure gauge to the outlet hose at the fuel pump.
   - Operate the fuel pump as described under **Operating Fuel Pump for Tests**. Check that the fuel pressure corresponds to the specifications listed in **Table b**.

> ***WARNING —***
> *Fuel under pressure is present during the test. Use hose clamps at all connections.*

NOTE —

If the system pressure is low, repeat the test while gradually pinching off the return hose. The pressure should rise rapidly. If not, the fuel pump is most likely faulty.

NOTE —

If the system pressure is too high, check the return line from the pressure regulator to the tank. Check for kinks in the hose. Blow compressed air through the line to check for blockages. If no faults can be found, the pressure regulator is most likely faulty. See **130 Fuel Injection—DME** *for testing and replacement procedures.*

Table b. Fuel Pressure Specifications

Engine	Fuel pressure
M20, M30	3.0 ± 0.06 bar (43.5 ± 0.9 psi)
M50, M60	3.5 ± 0.06 bar (51 ± 0.9 psi)

CAUTION —

Do not use compressed air above 40 psi to blow out lines or components. Internal damage to components may result.

3. When finished, disconnect the pressure gauge.

4. Check the fuel pump delivery rate:
   - Disconnect the return line from the fuel rail in the engine compartment.
   - Connect a length of hose to the fitting on the fuel rail and place the open end of the hose in a suitable container for catching fuel (2-quart capacity).
   - Run the fuel pump for exactly 30 seconds as described under **Operating Fuel Pump for Tests** and measure the fuel collected.

WARNING —

Fuel is highly flammable. When working around fuel, do not disconnect any wires that could cause electrical sparks. Do not smoke or work near heaters or other fire hazards.

Fuel Pump Delivery Rate (30 seconds @ 12V)

- 3.0 bar (43.5 psi) counterpressure . . . . . 875 cm^3 (0.93 qts.)

5. When finished testing, reconnect the fuel line. Tighten the hose clamp.

Fuel pump power consumption, checking

1. Disconnect the harness connector from the fuel pump/fuel level sender.

2. Connect an ammeter between fuel pump harness connector and fuel pump terminal.
   - Connect ammeter between terminal 5 in connector and corresponding pump terminal. Connect terminal 4 in connector to corresponding pump terminal using an insulated jumper. See Fig. 10.

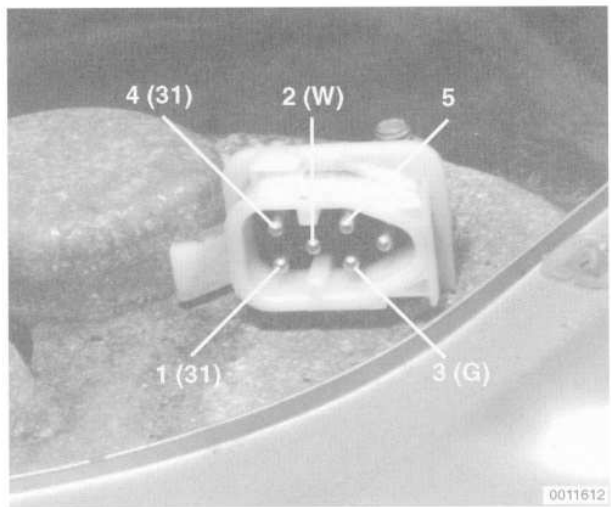

Fig. 10. Fuel pump/level sender terminal identification.

CAUTION —

Do not allow the test leads to short to ground.

NOTE —

See **600 Electrical System—General** *for information on electrical tests using a digital multimeter (DMM).*

3. Run the pump as described in **Operating Fuel Pump for Tests**.

4. Compare the ammeter reading with the specification listed in **Table c**.

NOTE —

To achieve accurate test results, the battery voltage at the connector should be approx. 13 volts. Charge the battery as necessary.

Table c. Fuel Pump Current

Maximum current consumption	5.0 amps

NOTE —

- *It's a common practice to replace the fuel filter any time the fuel pump unit is replaced.*
- *A higher than normal power consumption usually indicates a worn fuel pump, which may cause intermittent fuel starvation due to pump overheating and seizure. The only remedy is pump replacement. Be sure to check that the return line and the pump pickup are not obstructed before replacing the pump.*

170 Radiator and Cooling System

GENERAL 170-1
Coolant Pump and Thermostat 170-1
Radiator, Expansion Tank, and Cooling Fans 170-1
Warnings and Cautions 170-2

TROUBLESHOOTING 170-2
Pressure Test 170-2
Thermostat Quick Check 170-3
Temperature Gauge Quick Check 170-3
Cooling Fans Quick Check 170-3

DRAINING AND FILLING COOLANT 170-5
To drain and fill coolant 170-5
To bleed cooling system 170-5

COOLANT PUMP REPLACEMENT 170-6
To replace coolant pump (M20 engine) 170-6
To replace coolant pump (M30 engine) 170-7
To replace coolant pump (M50 engine) 170-8
To replace coolant pump (M60 engine) 170-9

THERMOSTAT REPLACEMENT 170-10
To replace thermostat 170-10

RADIATOR REMOVAL AND INSTALLATION 170-11
To remove and install radiator 170-11

COOLING FAN REMOVAL AND INSTALLATION 170-12
To remove and install cooling fan 170-12

TABLE
a. Auxiliary Fan Temperature Switch Tests 170-4
b. Cooling System Capacities 170-5

GENERAL

This section covers repair and troubleshooting information for the engine cooling system. For heater core and related heating and air conditioning components, see **640 Heating and Air Conditioning**.

Coolant Pump and Thermostat

A centrifugal-type coolant pump is mounted on the front of the cylinder block. The pump is crankshaft-driven by a drive belt and circulates coolant through the system whenever the engine is running. A thermostat controls the flow of coolant into the radiator.

When the engine is cold the thermostat is closed so coolant bypasses the radiator, recirculating from the engine directly back to the pump. When the engine reaches operating temperature, the thermostat opens and coolant circulates through the whole system including the radiator.

Radiator, Expansion Tank, and Cooling Fans

The radiator is a crossflow design. A translucent expansion tank provides for coolant expansion at higher temperatures and easy monitoring of the coolant level. On cars with automatic transmission, ATF is circulated through an additional heat exchanger (ATF cooler). See Fig. 1.

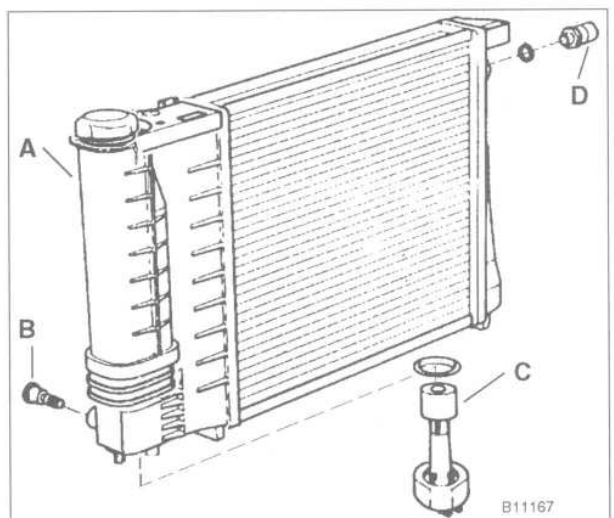

A. Expansion tank
B. Radiator drain screw
C. Coolant level sensor
D. Auxiliary fan temperature switch

Fig. 1. Radiator assembly for M20 and M50 engines.

The primary cooling fan is mounted to the front of the coolant pump through a fan clutch. The fan clutch is a viscous fluid coupling that controls the speed of the fan based on engine compartment temperature.

A two-speed electric auxiliary cooling fan is mounted behind the front grill and in front of the radiator. The fan is primarily used for the A/C system, but also operates when the coolant temperature exceeds a predetermined level.

Warnings and Cautions

The following warnings and cautions should be observed when working on the cooling system.

WARNING —

- *At normal operating temperature the cooling system is pressurized. Allow the system to cool as long as possible before opening—a minimum of an hour—then release the cap slowly to allow safe release of pressure.*
- *Releasing the cooling system pressure lowers the coolant's boiling point and the coolant may boil suddenly. Use heavy gloves and wear eye and face protection to guard against scalding.*
- *Use extreme care when draining and disposing of engine coolant. Coolant is poisonous and lethal to humans and pets. Pets are attracted to coolant because of its sweet smell and taste. Consult a veterinarian immediately if coolant is ingested by an animal.*

CAUTION —

- *Avoid adding cold water to the coolant while the engine is hot or overheated. If it is necessary to add coolant to a hot system, do so only with the engine running and coolant pump turning.*
- *Disconnecting the battery cables may erase fault codes stored in control unit memory. Check and record any fault codes before disconnecting battery.*

TROUBLESHOOTING

Most cooling system faults can be grouped into one of three categories: 1) cooling system leaks, 2) poor coolant circulation, or 3) radiator cooling fan faults.

When investigating the cause of overheating or coolant loss, begin with a visual inspection. Be sure to check the condition and tightness of the coolant pump drive belt. Check hoses for cracks or softness. Check clamps for looseness. Check the coolant level and check for evidence of coolant leaks from the engine.

Check that the radiator fins are not blocked with dirt or debris. Clean the radiator using low-pressure water or compressed air. Blow outward, from the engine side out.

Inspect the coolant pump by first removing the drive belt from the pump. Firmly grasp opposite sides of the pulley and check for play in all directions. Rotate the pulley and check that the shaft runs smoothly.

NOTE —

The coolant provides some lubrication for the pump shaft, so an occasional drop of coolant leaking from the pump is acceptable. If coolant drips steadily from the vent hole, the pump should be replaced.

The cooling system becomes pressurized at normal operating temperature, which raises the boiling point of the coolant. Leaks may prevent the system from becoming pressurized, allowing the coolant to boil at a lower temperature. If visual evidence is inconclusive, a cooling system pressure test may help to pinpoint hard-to-find leaks.

If the cooling system is full of coolant and holds pressure, the next most probable cause of overheating is the result of poor coolant circulation due to a loose or worn drive belt, a failed thermostat or coolant pump, a pinched or restricted hose, or a partially clogged radiator.

Pressure Test

A cooling system pressure test is used to check for internal leaks. Some of the common sources of internal leaks are a faulty cylinder head gasket, a cracked cylinder head, or a cracked cylinder block.

To do a cooling system pressure test, a special pressure tester is needed. The engine should be fully warm when making the test.

WARNING —

At normal operating temperature the cooling system is pressurized. Allow the system to cool before opening. Then release the cap slowly to allow safe release of pressure.

With the engine cold, install a pressure tester to the expansion tank. Allow the engine to reach operating temperature, then pressurize the system to the specification listed below. Pressure should not drop noticeably for at least 2 minutes. If the pressure drops rapidly and there is no sign of an external leak, the cylinder head gasket may be faulty. Consider a compression or leak down test, as described in **100 Engine—General.**

Cooling system test pressure

- Maximum . . . . . 1.0 bar (14.5 psi)

CAUTION —

Exceeding the specified test pressure could damage the radiator or other cooling system components.

NOTE —

The screw-on type expansion tank cap should also be tested using a pressure tester and the correct adapter. Carefully inspect the cap for damage. A faulty cap or a damaged cap gasket should be replaced.

Thermostat Quick Check

To check if the thermostat is opening and coolant is circulating through the radiator, allow a cold engine to reach operating temperature (temperature gauge needle approximately centered). Feel the top radiator hose. If the hose is hot to the touch, the coolant is probably circulating correctly. If there are any cool areas in the hose or radiator, coolant flow to the radiator is probably restricted. Check for a faulty thermostat or a plugged radiator.

NOTE —

A thermostat that is stuck open will cause the engine to warm up slowly and run below normal temperature at highway speed. A thermostat that is stuck closed will restrict coolant flow to the radiator and cause overheating.

If the engine overheats and no other cooling system tests indicate trouble, the radiator may have some plugged passages that are restricting coolant flow.

Temperature Gauge Quick Check

A quick, easy test at the coolant temperature gauge sender can determine if the gauge is functioning correctly.

If the gauge needle remains at the rest position with the engine warm, disconnect the connector from the sending unit and jumper the two terminals in the connector to simulate a high engine temperature. See Fig. 2. Turn the ignition on. If the gauge needle moves upward, the sending unit is faulty. If the gauge does not respond, the wiring to the gauge is broken (open circuit) or the gauge itself is faulty.

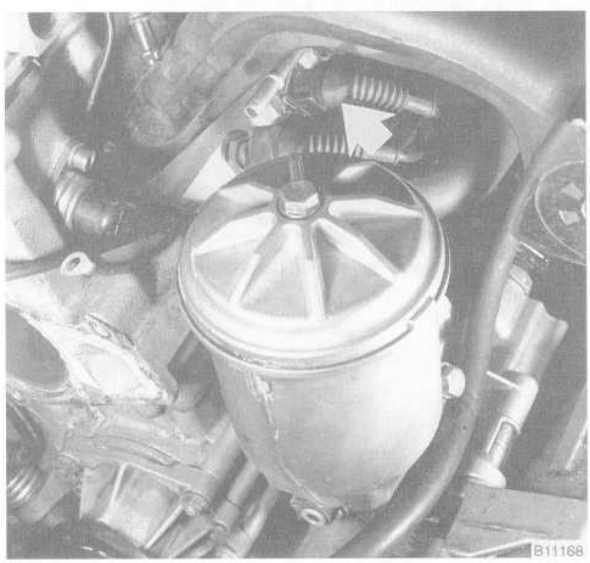

Fig. 2. Temperature gauge sender (brown body) on M50 engine. Location of sender varies depending on engine type.

Temperature gauge sender location

- Brown switch body

525i (M20 engine) . . . . . in thermostat housing
535i (M30 engine) . . . . . in thermostat housing
525i (M50 engine) . . . . . front of cyl. head, intake side
530i, 540i (M60 engine) . . . . . rear of engine, in coolant manifold

NOTE —

On M60 engines, remove the top engine cover to access the gauge sender in the coolant manifold at the rear of the engine.

If the gauge needle reads too high when the engine is cold, disconnect the connector from the sender. Turn the ignition on. If the gauge needle position does not change, the wiring or the gauge is shorted to ground. If the gauge needle drops, the sender is faulty and should be replaced. When replacing a faulty coolant temperature sender, the gasket ring on the sender should also be replaced.

Tightening Torque

- Temperature gauge sender . . . . . 18 Nm (13 ft-lb)

Cooling Fans Quick Check

An otherwise sound cooling system may still overheat, particularly with prolonged idling, due to a failure of the primary cooling fan. The cooling fan is controlled by a temperature dependent viscous fan clutch. A failed fan clutch may affect air flow through the radiator resulting in overheating or possibly over cooling.

Inspect the fan clutch by spinning the fan with the engine off and cold. The viscous fan should spin on the clutch with slight resistance. Check for signs of leaking fluid from the clutch. If the fan freewheels with little resistance, cannot be turned by hand, or there are signs of oil leakage, the clutch should be replaced.

WARNING —

- *Use caution when testing the cooling fan and coolant temperature switches. Keep hands and wires clear of the fan blades. The cooling fan can run any time the ignition is ON.*
- *For greatest safety, cooling fan and coolant temperature switch tests should be performed on a cold engine with the air conditioning off.*

The auxiliary (electric) cooling fan provides additional air flow through the radiator when coolant temperature exceeds a predetermined level or whenever the air conditioning is on. The fan assembly is mounted in front of the radiator. A dual-range temperature switch is mounted on the right side of the radiator.

Auxiliary Cooling Fan Switching Temperatures

- Low speed . . . . . 196°F (91°C)
- High speed. . . . . 210°F (99°C)

If a faulty thermostat, trapped air, or a restriction in the system is not allowing the coolant to circulate through the radiator, the switch will not close and the fan will not run. Before making the tests described below, make sure the thermostat is operating correctly as described earlier.

If the coolant is circulating at normal operating temperature, and the auxiliary cooling fan does not run, disconnect the connector from the radiator temperature switch and make the tests listed in **Table a**.

If the fan runs only when powered directly by the jumpered connector and hot coolant is circulating through the radiator, the radiator temperature switch is faulty. Use a new gasket ring when replacing the switch.

Table a. Auxiliary Fan Temperature Switch Tests

Wires jumpered	Test conditions	Test results
Violet/grey and brown	Ignition ON	Fan runs on low speed
Black/grey/yellow (1989–1992) **or** Black/grey (1993 and later) and brown	Ignition ON	Fan runs on high speed

Tightening Torque

- Temperature switch to radiator. . . . . 8 Nm (71 in-lb)

If the fan does not run when powered directly, check for battery voltage at the switch connector with the ignition on. If battery voltage is not present, check fuse no. 29 (low-speed) and fuse no. 25 (high-speed). If no faults are found, remove the relays and turn the ignition on. Check for power at terminal 30 and terminal 86 of the relay block with the ignition ON. Relay locations are shown in Fig. 3. Fix any wiring faults found. Complete wiring diagrams for the radiator cooling fan can be found under **Electrical Wiring Diagrams**.

If the fan operates only on high speed and no electrical faults have been found up to this point, use an ohmmeter to check that the fan resistor is not electrically open. The resistor is mounted on the auxiliary fan housing. See Fig. 4.

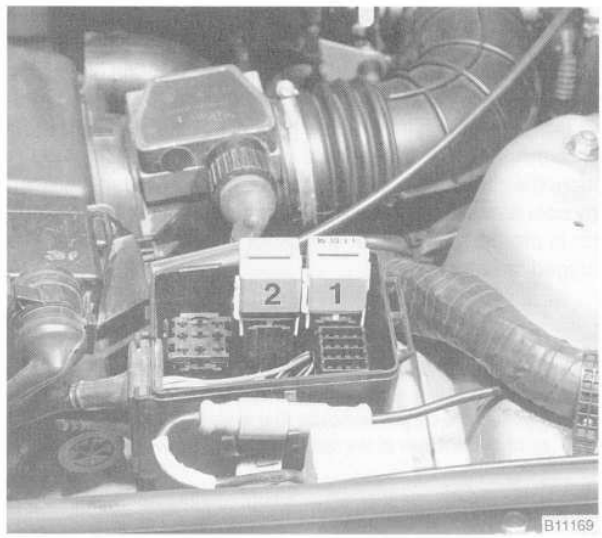

Fig. 3. Auxiliary radiator cooling fan low speed relay (**1**) and high speed relay (**2**) in auxiliary relay box.

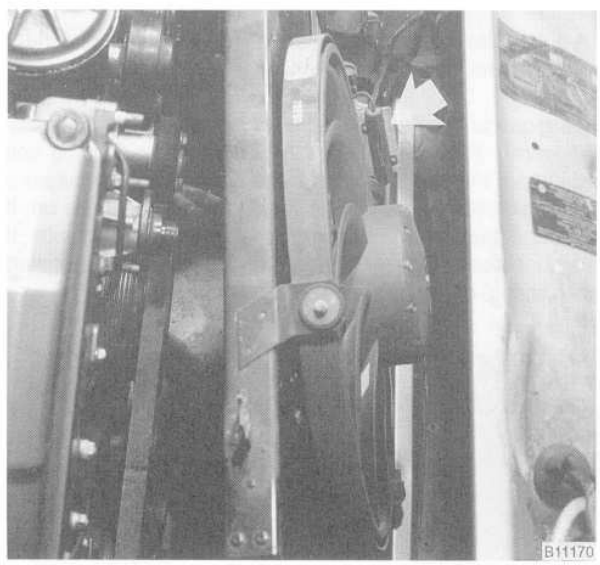

Fig. 4. Auxiliary radiator cooling fan resistor (**arrow**).

DRAINING AND FILLING COOLANT

To drain and fill coolant

1. Disconnect the negative (–) cable from the battery.

2. With the engine cold, remove the expansion tank cap. Set the temperature controls in the passenger compartment to full warm.

> ***WARNING —***
> *Allow the cooling system to cool before opening or draining the cooling system.*

3. Place a 3-gallon pail beneath the radiator drain plug. Remove the drain plug. See Fig. 5.

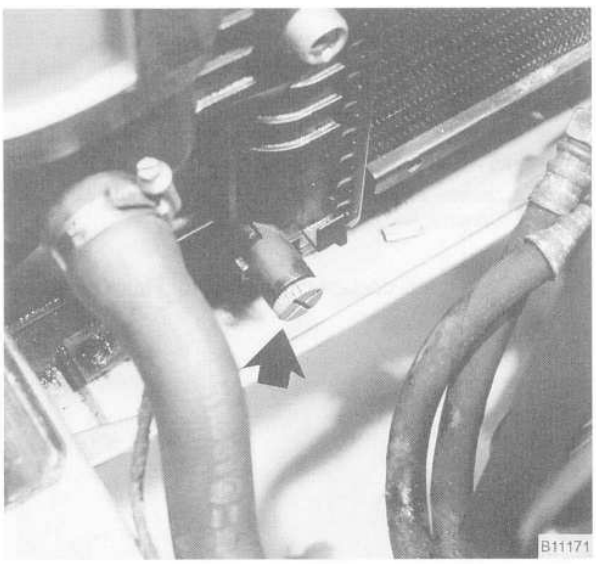

Fig. 5. Radiator drain plug (**arrow**).

> ***WARNING —***
> *Coolant is poisonous and lethal, especially to pets. Clean up spills immediately and rinse the area with water.*

4. Place the three gallon pail beneath the rear of the engine block. Loosen and remove the engine block coolant drain plug.

> ***NOTE —***
> *The block drain plug is located on the exhaust side of the engine, below cylinder no. 6.*

5. Reinstall the radiator and engine block drain plugs using new sealing washers. Be sure the heater controls are set to full warm.

Tightening Torques

- Radiator drain plug to radiator . . .2-3 Nm (18-27 in-lb)
- Engine block drain plug to block
  M20, M30, M50 engines . . . . . 40 Nm (30 ft-lb)
  M60 engine . . . . . 28 Nm (20 ft-lb)

6. Using a coolant mixture of 50% anti-freeze and 50% water, fill the system slowly so that air is allowed to escape. Bleed the cooling system properly.

> ***NOTE —***
> - *Coolant can often be reused provided it is clean and less than two years old.*
> - *Do not reuse the coolant when replacing damaged engine parts. Contaminated coolant may damage the engine or cooling system.*

Table b. Cooling System Capacities

M20 engine	10 liters (10.5 qts.)
M50 engine	10.5 liters (11 qts.)
M30 engine	12 liters (12.7 qts.)
M60 engine	12.5 liters (13 qts.)

To bleed cooling system

Air may become trapped in the system during filling. Trapped air can prevent proper coolant circulation. Whenever the coolant is drained and filled, the system should be bled of trapped air.

1. Add coolant to expansion tank until level reaches COLD mark on tank.

2. On models with radiator-mounted expansion tank, loosen bleed screw on radiator expansion tank. Add coolant until it spills from bleed screw. Tighten screw. See Fig. 6.

3. On models with separate expansion tank, loosen bleed screw on thermostat housing. Add coolant to expansion tank until it spills from screw. Tighten screw. See Fig. 7.

4. Set temperature controls in passenger compartment to full warm and start engine.

5. With engine idling at normal operating temperature, loosen bleed screw. Tighten screw when coolant spilling from bleed is free from air bubbles.

6. After engine has cooled, recheck coolant level and add coolant as necessary.

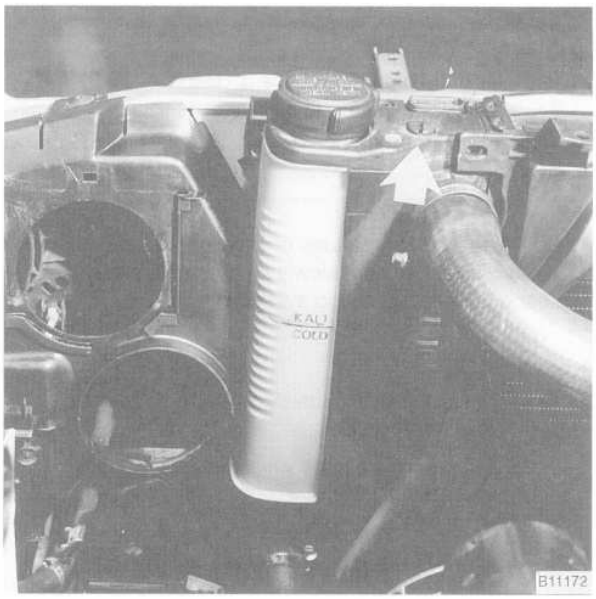

Fig. 6. Cooling system bleed screw on 525i models (**arrow**). Also note cold level mark on expansion tank.



Fig. 7. Cooling system bleed screw (**arrow**) on 535i model.

CAUTION —
Always use genuine BMW coolant or its equivalent to avoid the formation of harmful, clogging deposits in the cooling system. Use of other antifreeze solutions may be harmful to the cooling system.

COOLANT PUMP REPLACEMENT

Coolant pump replacement procedures are organized according to engine codes. For engine code application information, see **100 Engine General.**

To replace coolant pump (M20 engine)

1. Disconnect negative (–) cable from battery.
2. With engine cold, drain cooling system as described above.

   WARNING —
   Allow the cooling system to cool before opening or draining the system.

3. Remove fan clutch assembly and fan shroud as described below under **Cooling Fan Removal and Installation.**

   NOTE —
   The radiator cooling fan nut (32 mm wrench) has left-hand threads.

4. Remove metal coolant cross pipe from front of engine. See Fig. 8.

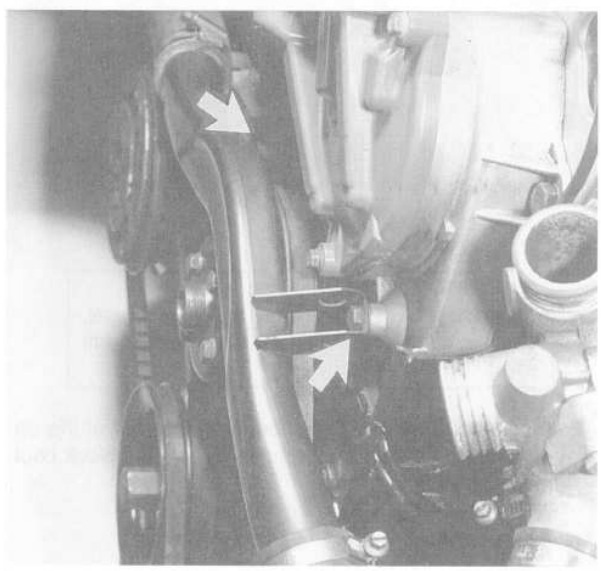

Fig. 8. Coolant cross-pipe mounting bolts (**arrows**).

5. Remove distributor cap with wire assembly, ignition rotor and dust shield as described in **120 Ignition System—DME.**

6. Placing light pressure on engine V-belt, loosen coolant pump pulley mounting bolts. Remove V-belt and remove pulley from pump.

7. Loosen hose clamps and remove two hoses from coolant pump.

8. Working at front of camshaft drive belt cover, loosen upper alternator bracket mounting nut, and unclip plastic wiring duct from cover. See Fig. 9.



Fig. 9. Upper alternator bracket nut and wiring duct (**arrows**).

9. Remove camshaft drive belt cover mounting bolts. Slide cover up and out together with side rubber piece.

10. Loosen all three coolant pump mounting bolts. Remove two upper bolts. Then pivot pump down and remove camshaft drive belt tensioner spring and pin. Remove remaining mounting bolt together with pump. See Fig. 10.

> ***CAUTION —***
> *Do not loosen the camshaft drive belt tensioner bolts. The valves can be damaged if the pistons are accidentally moved while belt tension is relieved.*

11. Installation is reverse of removal. Use a new coolant pump gasket and make sure gasket mating surfaces are clean and dry. Fill system with coolant and bleed system as described above in **Draining and Filling Coolant.**

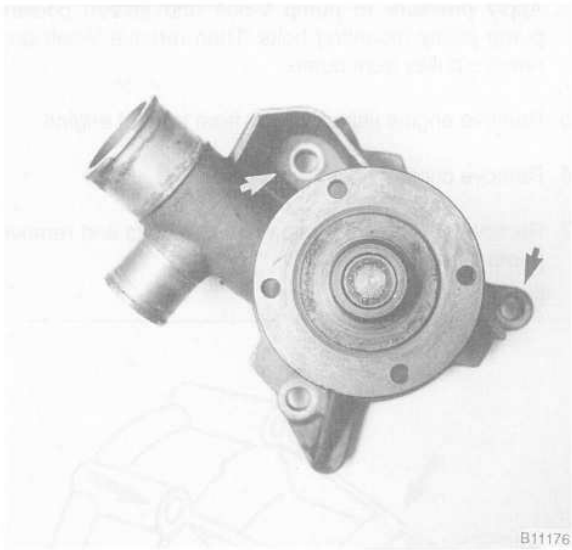

Fig. 10. When removing coolant pump, remove upper bolts first (**arrows**), pivot pump down and remove pin and spring. Then remove last bolt together with pump.

> ***NOTE —***
> *When installing pump, be sure camshaft drive belt tensioner spring and pin correctly engage detent on pump.*

Tightening Torques

- Coolant pump to cylinder block . . . . . 22 Nm (16 ft-lb)
- Coolant pump pulley to coolant pump . . . . . 10 Nm (89 in-lb)

To replace coolant pump (M30 engine)

1. Disconnect negative (–) cable from battery.

2. With engine cold, drain cooling system as described earlier.

> ***WARNING —***
> *Allow cooling system to cool before opening or draining cooling system.*

3. Remove fan clutch assembly and fan shroud as described below under **Cooling Fan Removal and Installation.**

> ***NOTE —***
> *The radiator cooling fan nut (32 mm wrench) has left-hand threads.*

4. Apply pressure to pump V-belt and loosen coolant pump pulley mounting bolts. Then remove V-belt and remove pulley from pump.

5. Remove engine lifting bracket from front of engine.

6. Remove coolant hose from pump.

7. Remove six coolant pump mounting bolts and remove pump. See Fig. 11.

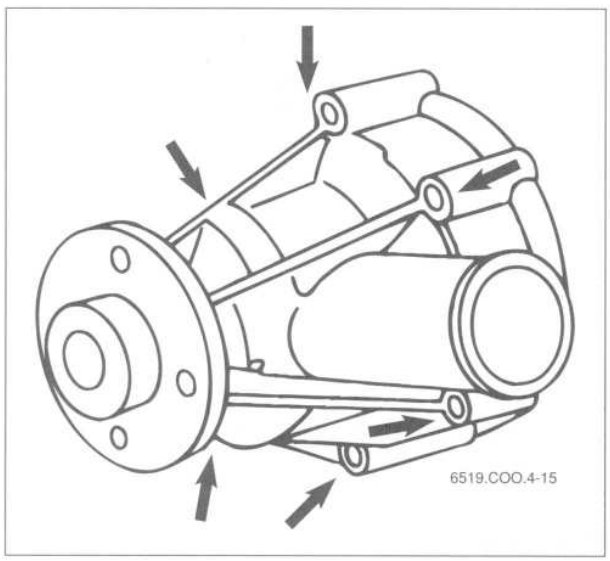

Fig. 11. M30 engine coolant pump. Mounting bolts shown at **arrows**.

8. Installation is reverse of removal. Use a new gasket and make sure gasket mating surfaces are clean and dry. Fill system with coolant and bleed system as described under **Draining and Filling Coolant**.

Tightening Torques

- Coolant pump to cylinder block . . . . . 10 Nm (89 in-lb)
- Coolant pump pulley to coolant pump . . . . . 10 Nm (89 in-lb)

To replace coolant pump (M50 engine)

NOTE —

Only replacement coolant pumps with metal impellers should be installed. Pumps with plastic impellers should not be used.

1. Disconnect negative (–) cable from battery.

2. With engine cold, drain cooling system as described earlier.

WARNING —

Allow cooling system to cool before opening or draining system.

3. Remove fan clutch assembly and fan shroud as described below under **Cooling Fan Removal and Installation.**

NOTE —

The radiator cooling fan nut (32 mm wrench) has left-hand threads.

4. Loosen hose clamps and remove hoses from thermostat housing.

5. Loosen coolant pump pulley mounting bolts. Then remove drive belt. See Fig. 12. Remove pulley from pump.

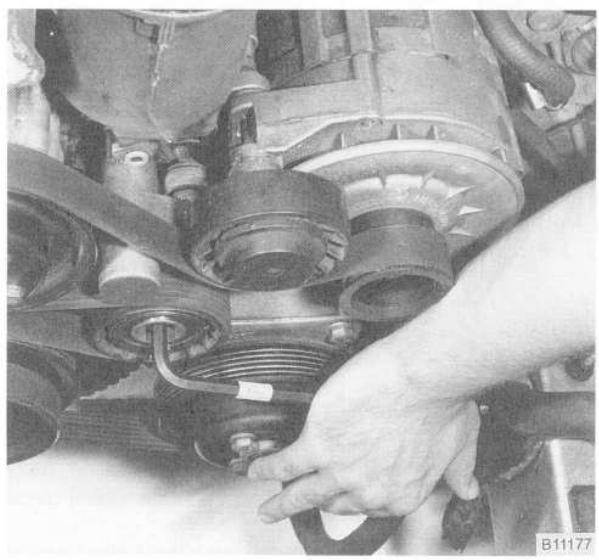

Fig. 12. Poly-V belt tensioner being released. Pry off tensioner cover and then lever tensioner clockwise to release belt tension.

6. Remove four coolant pump mounting nuts.

7. Using two M6 bolts, thread them into ears on either side of pump. Then slowly and evenly turn bolts in until pump is drawn out. See Fig. 13.

8. Using a new O-ring, install new coolant pump on its studs. Tighten nuts alternately and evenly until pump is firmly seated. Then tighten nuts to their final torque.

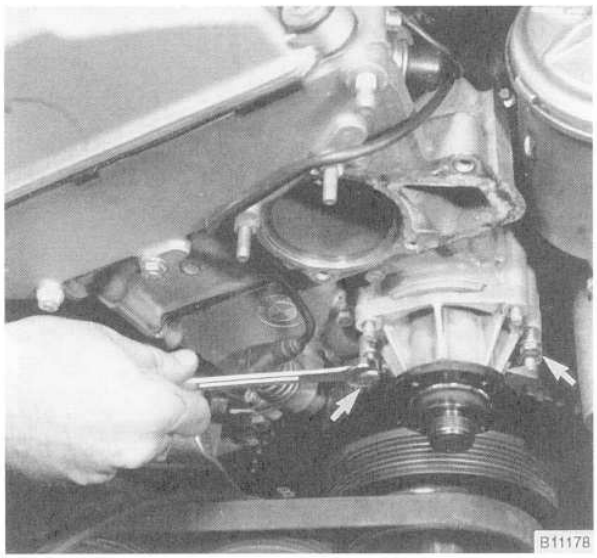

Fig. 13. Coolant pump being removed using two M6 bolts (**arrows**). Thread bolts in evenly to withdraw pump.

> ***CAUTION —***
> *Failure to tighten pump mounting nuts evenly could result in damage to pump and/or timing chain cover.*

NOTE —
For easier installation, coat coolant pump O-ring with a thin layer of petroleum jelly.

9. The remainder of installation is reverse of removal. Install coolant pump pulley, cooling fan, and fan shroud. Fill system with coolant and bleed system as described under **Draining and Filling Coolant.**

Tightening Torques

- Coolant pump to timing chain cover . . . . . 10 Nm (89 in-lb)
- Coolant pump pulley to coolant pump . . . . . 10 Nm (89 in-lb)

To replace coolant pump (M60 engine)

1. Disconnect negative (–) cable from battery beneath rear seat.

2. With engine cold, drain cooling system as described earlier.

> ***WARNING —***
> *Allow cooling system to cool before opening or draining cooling system.*

3. Remove fan clutch assembly and fan shroud as described under **Cooling Fan Removal and Installation**.

NOTE —
The radiator cooling fan nut (32 mm wrench) has left-hand threads.

4. Working from below car, remove engine splash guard and then remove heat shields from front suspension crossmember.

5. Loosen coolant pump pulley mounting bolts.

6. Remove engine drive belt as described in **020 Maintenance Program**.

7. Remove pulley from coolant pump.

8. Remove vibration damper from crankshaft hub. See Fig. 14.

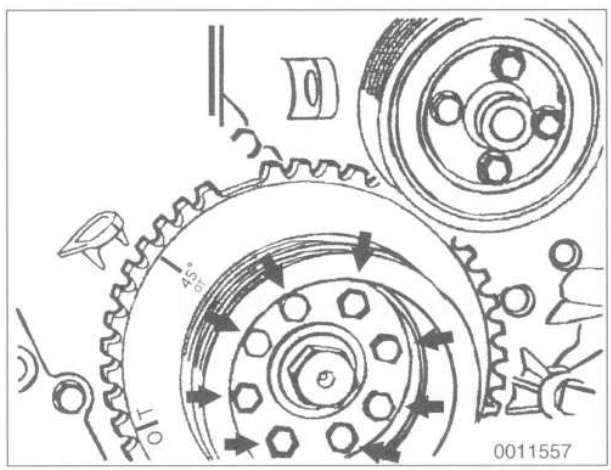

Fig. 14. Vibration damper mounting bolts (**arrows**) on M60 engine.

9. Remove coolant hoses from coolant pump/thermostat housing. Remove pump mounting bolts (qty. 6). See Fig. 15.

10. Installation is reverse of removal. Tightening torques are given below. Transfer thermostat from old pump using a new O-ring. Be sure pump aligns correctly with dowels in timing chain cover during installation. Fill system with coolant and bleed as described under **Draining and Filling Coolant**.

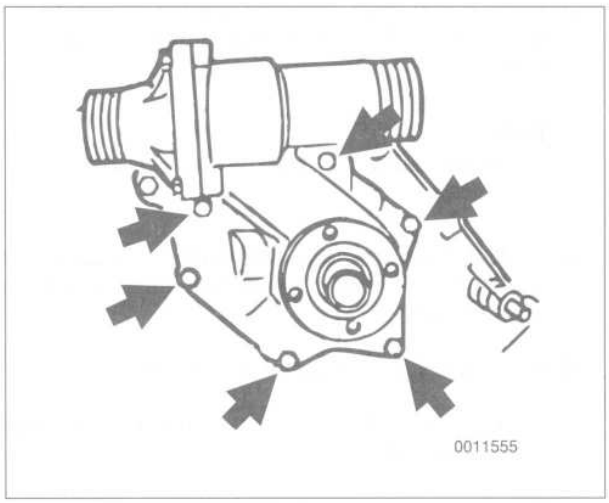

Fig. 15. Coolant pump mounting bolts (arrows) on M60 engine.

Tightening Torques

- Coolant pump to timing chain cover . . . . . 10 Nm (89 in-lb)
- Coolant pump pulley to coolant pump . . . . . 10 Nm (89 in-lb)
- Thermostat housing to coolant pump . . . . . 10 Nm (89 in-lb)
- Vibration damper to crankshaft hub . . 22 Nm (17 ft-lb)

THERMOSTAT REPLACEMENT

To replace thermostat

1. Disconnect negative (–) cable from battery.

2. With engine cold, partially drain radiator as described above under **Draining and Filling Coolant**.

> ***WARNING —***
> *Allow the cooling system to cool before opening or draining the system.*

3. On M60 engines, remove upper section of air cleaner complete with air flow sensor.

4. Remove thermostat housing:
   - On M20, M30, and M50 engines, the thermostat is mounted in the thermostat housing on the front of the engine. See Fig. 16.
   - On M60 engines, the thermostat is mounted in the thermostat housing as part of the coolant pump. See Fig. 17.

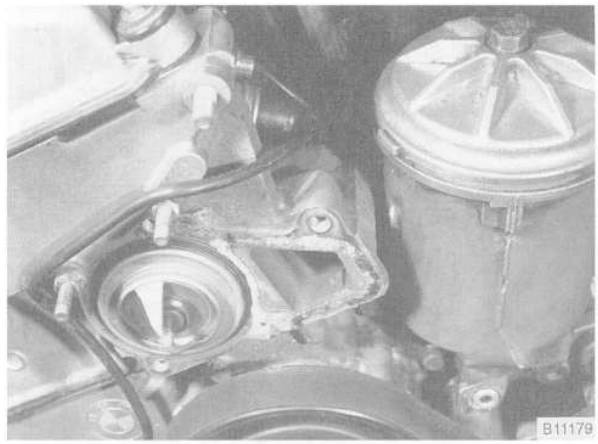

Fig. 16. Thermostat housing shown removed on M50 engine.

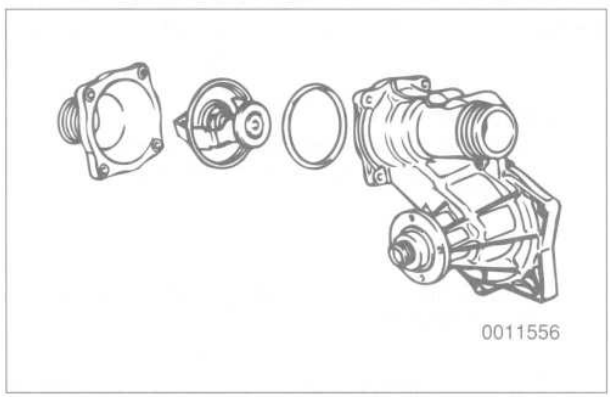

Fig. 17. Thermostat on M60 engine.

> ***NOTE —***
> *On M50 and M60 engines, removal of the cooling fan and fan shroud will provide additional clearance. See* **Cooling Fan Removal and Installation**.

5. Separate thermostat housing and remove thermostat. Note direction and orientation of thermostat before removing.

6. Install new thermostat and thermostat housing cover using new O-ring and gasket(s) as necessary.

> ***NOTE —***
> *Some thermostats have a direction arrow or vent hole near the edge. Install the thermostat so that either the arrow or hole are at the top.*

7. Installation is reverse of removal. Fill system with coolant and bleed system as described under **Draining and Filling Coolant**.

CAUTION —
On M50 engines, do not forget to reconnect the ground wire(s) to the thermostat housing mounting bolt.

Tightening Torques

- Thermostat housing cover to housing or coolant pump . . . . . 10 Nm (89 in-lb)
- Engine lifting bracket bolt to thermostat housing (M50 engine) . . . 22 Nm (16 ft-lb)

RADIATOR REMOVAL AND INSTALLATION

To remove and install radiator

1. Disconnect negative (–) cable from battery.
2. With engine cold, drain radiator as described earlier under **Draining and Filling Coolant**.

WARNING —
Allow cooling system to cool before opening or draining system.

3. Remove fan clutch assembly and fan shroud as described below under **Cooling Fan Removal and Installation.**

NOTE —
The radiator cooling fan nut (32 mm wrench) has left-hand threads.

4. Disconnect all coolant hoses from radiator.
5. Disconnect harness connector from auxiliary fan temperature switch. See Fig. 18.
6. On M20 and M50 engines, disconnect coolant level sensor connector from bottom of radiator expansion tank.
7. Disconnect automatic transmission fluid (ATF) cooler lines from radiator, where applicable.

NOTE —
Plug the disconnected ATF cooler lines and position them upwards to avoid loss of fluid.

8. Pry out radiator retaining clips from top of radiator. See Fig. 19.
9. Pull radiator up and out of car.

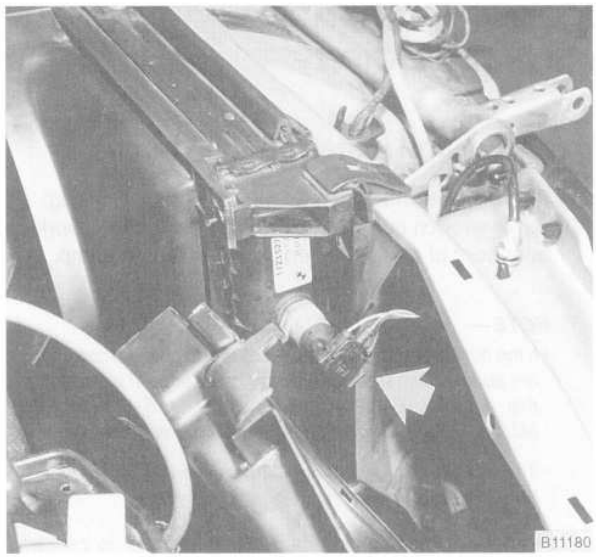

Fig. 18. Auxiliary radiator cooling fan temperature switch (**arrow**).

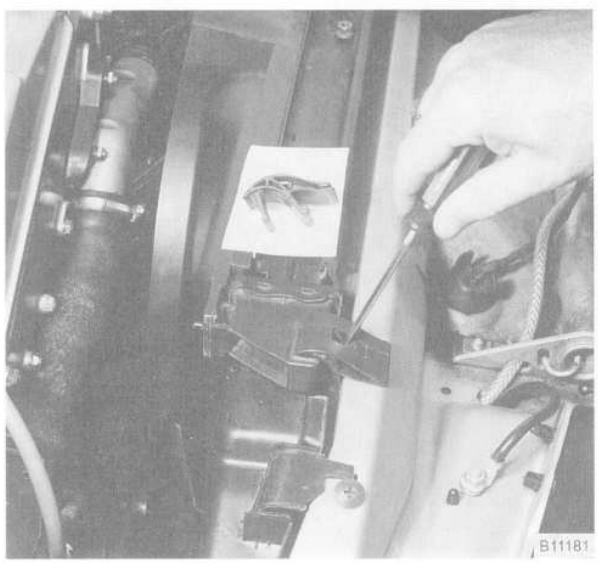

Fig. 19. Radiator retaining clip being removed. Push down and pull screwdriver forward to release clip.

NOTE —
The radiator is mounted on two rubber mounts. Check that the mounts do not stick to the bottom of the radiator.

10. Installation of radiator is reverse of removal, noting the following:
    - Use new sealing rings when installing ATF cooler lines. Check ATF level. See **020 Maintenance Program**.
    - Fill and bleed radiator and cooling system as described under **Draining and Filling Coolant**.

COOLING FAN REMOVAL AND INSTALLATION

To remove and install cooling fan

1. Place a 32 mm wrench on fan clutch nut. See Fig. 20. Strike wrench quickly in a clockwise direction (working from front of car) to loosen nut. Spin fan off pump.

NOTE —

- *If the nut is difficult to loosen, use a tool to hold the coolant pump pulley stationary. BMW has a special tool for this purpose (BMW special tool no. 11 5 030 for M20/M30 engines or 11 5 050 for M50/60 engines).*
- *The radiator cooling fan nut (32 mm wrench) has left-hand threads.*

2. Remove expansion rivets holding shroud to radiator. See Fig. 21.

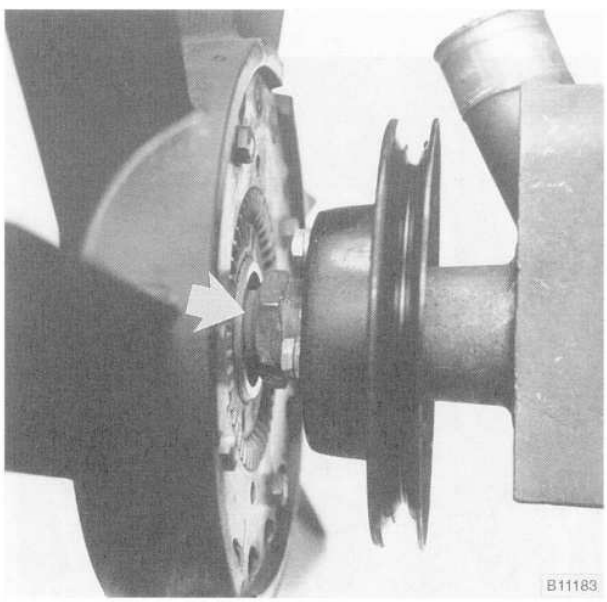

Fig. 20. Radiator cooling fan nut (**arrow**).

3. Remove fan and shroud together.

NOTE —

Store the removed fan clutch assembly in an upright position to prevent loss of clutch fluid.

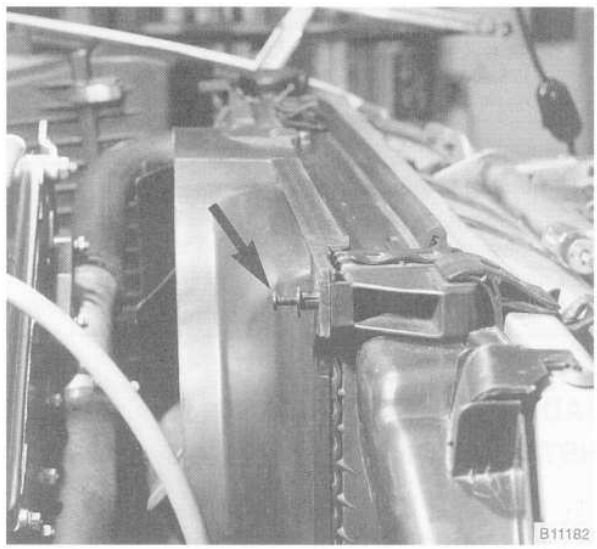

Fig. 21. Fan shroud retaining rivet. Pry out center pin (**arrow**) and remove rivet.

4. To replace fan clutch, remove fan mounting bolts (qty. 4) and separate fan from clutch.

5. Installation is reverse of removal.

Tightening Torques

- Fan to viscous clutch . . . . . 10 Nm (89 in-lb)
- Clutch nut to coolant pump (left-hand thread)
  without BMW tool no. 11 5 040 . . . . . 40 Nm (29 ft-lb)
  with BMW tool no. 11 5 040. . . . . 30 Nm (22 ft-lb)

180 Exhaust System

GENERAL 180-1

EXHAUST SYSTEM REPLACEMENT 180-3
Exhaust system, removing and installing 180-3
Exhaust manifolds, removing and installing (M20, M30, M50 engines) 180-4
Exhaust manifolds, removing and installing (M60 engine, left manifolds) 180-4
Exhaust manifolds, removing and installing (M60 engine, right manifolds) 180-5

GENERAL

The exhaust system is designed to be maintenance free, although regular inspection is warranted due to the harsh operating conditions. Under normal conditions, the catalytic converter does not require replacement unless it is damaged. The rear exhaust pipe assembly includes intermediate and primary mufflers and must be replaced as a unit. Exhaust system components are detailed in Fig. 1 through Fig. 4.

WARNING —
Exhaust gases are colorless, odorless, and very toxic. Run the engine only in a well-ventilated area. Immediately repair any leaks in the exhaust system or structural damage to the car body that might allow exhaust gases to enter the passenger compartment.

The oxygen sensor monitors the exhaust gas and provides feedback about combustion efficiency to the DME control unit. The oxygen sensor should be replaced as a part of routine maintenance at a specified mileage interval. See **020 Maintenance Program** for replacement information. For information on testing the oxygen sensor see **130 Fuel Injection—DME**.

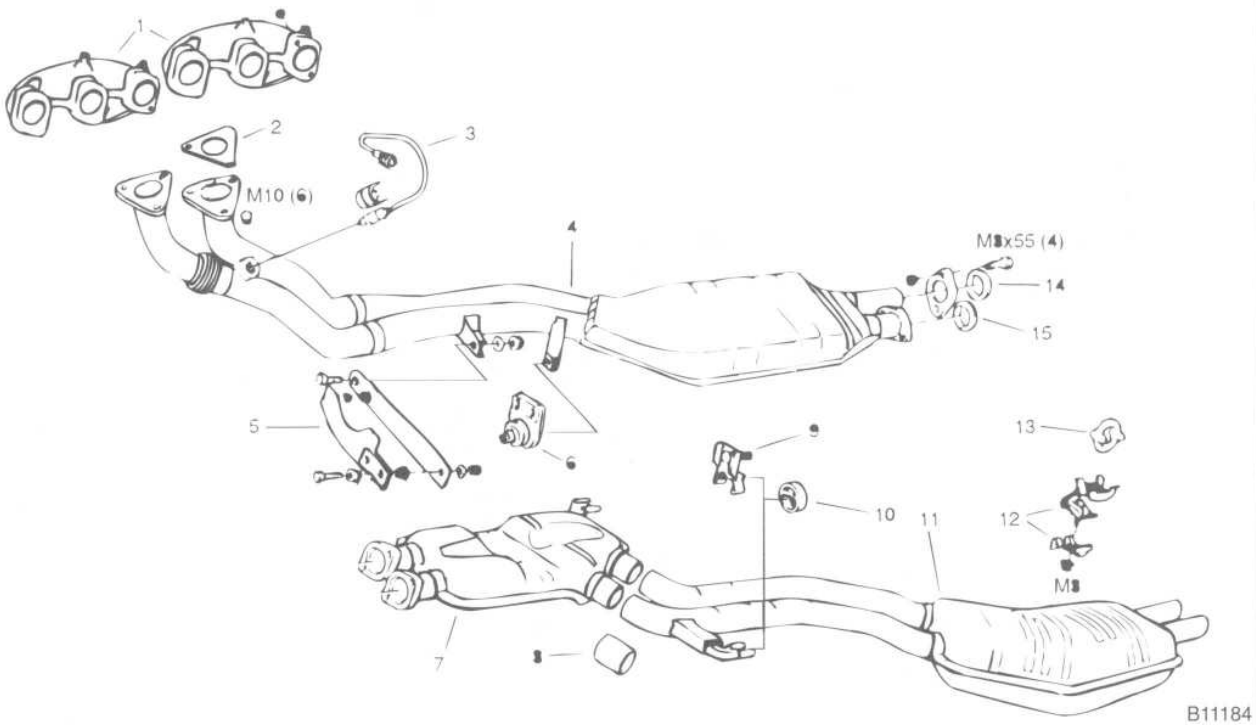

1. Exhaust manifolds
2. Gasket (2)
3. Oxygen sensor and shield
4. Front pipe with catalytic convertor
5. Bracket (manual trans.)
6. Bracket (automatic trans.)
7. Intermediate muffler
8. Joining collar (2)
9. Bracket (2)
10. Rubber mounting ring (2)
11. Rear pipe with muffler
12. Bracket/clamp (2)
13. Rubber mounting ring (2)
14. Gasket ring (45 mm)
15. Gasket ring (42 mm)

Fig. 1. Exploded view of exhaust system on 1989–1990 525i model with M20 engine.

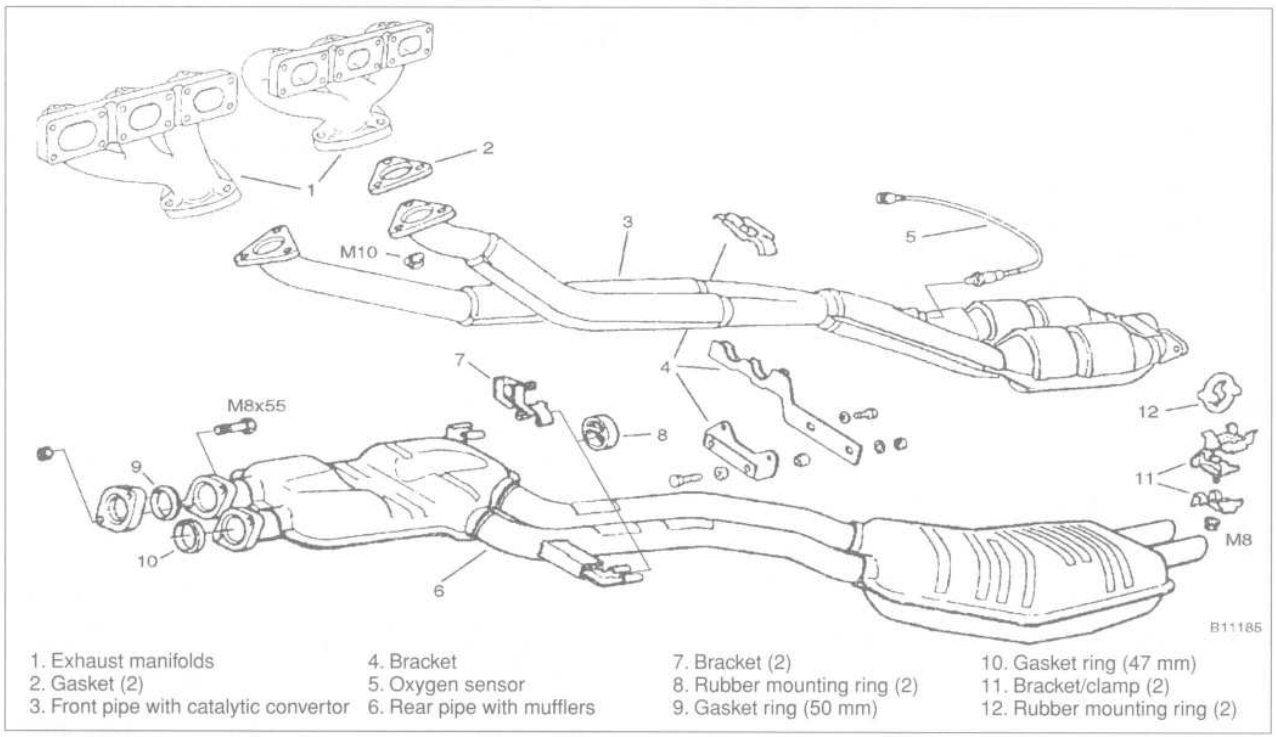

1. Exhaust manifolds
2. Gasket (2)
3. Front pipe with catalytic convertor
4. Bracket
5. Oxygen sensor
6. Rear pipe with mufflers
7. Bracket (2)
8. Rubber mounting ring (2)
9. Gasket ring (50 mm)
10. Gasket ring (47 mm)
11. Bracket/clamp (2)
12. Rubber mounting ring (2)

Fig. 2. Exploded view of exhaust system on 1991 and later 525i models with M50 engine.

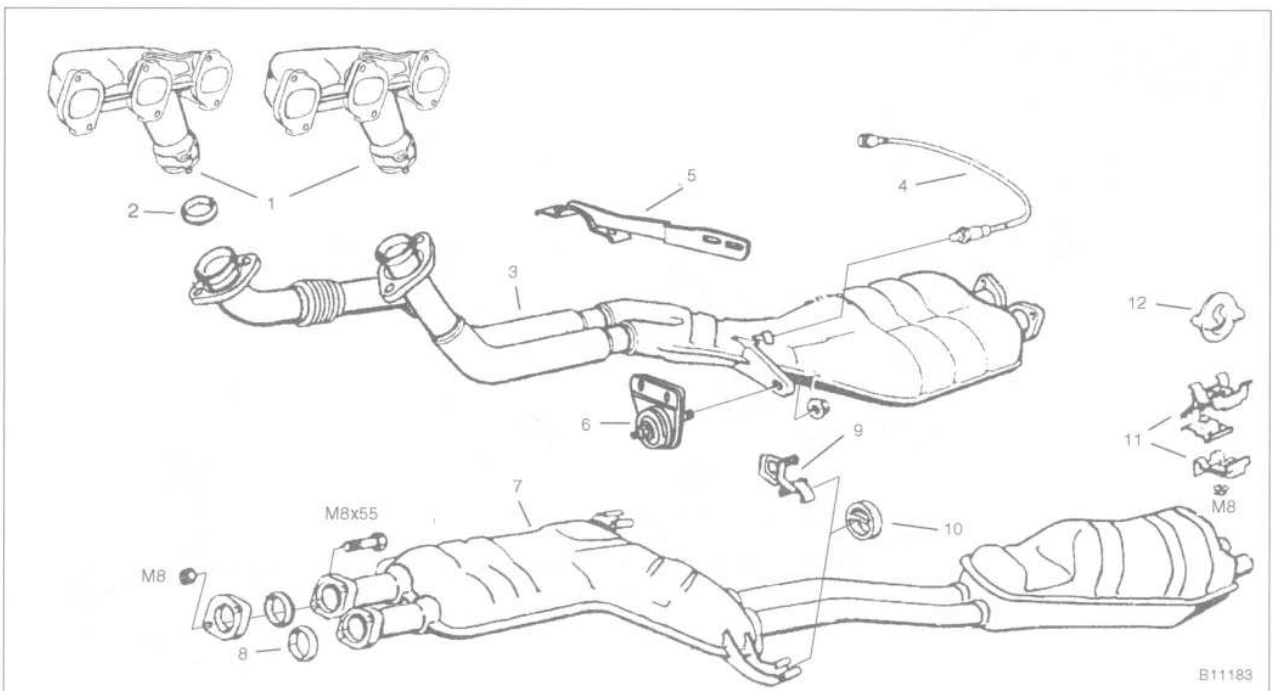

1. Exhaust manifolds
2. Gasket rings
3. Front pipe with catalytic converter
4. Oxygen sensor and shield
5. Bracket (manual trans.)
6. Bracket (automatic trans.)
7. Rear pipe with mufflers
8. Gasket ring
9. Bracket (2)
10. Rubber mounting ring (2)
11. Bracket/clamp(2)
12. Rubber mounting ring (2)

Fig. 3. Exploded view of exhaust system on 1989 and later 535i models with M30 engine.

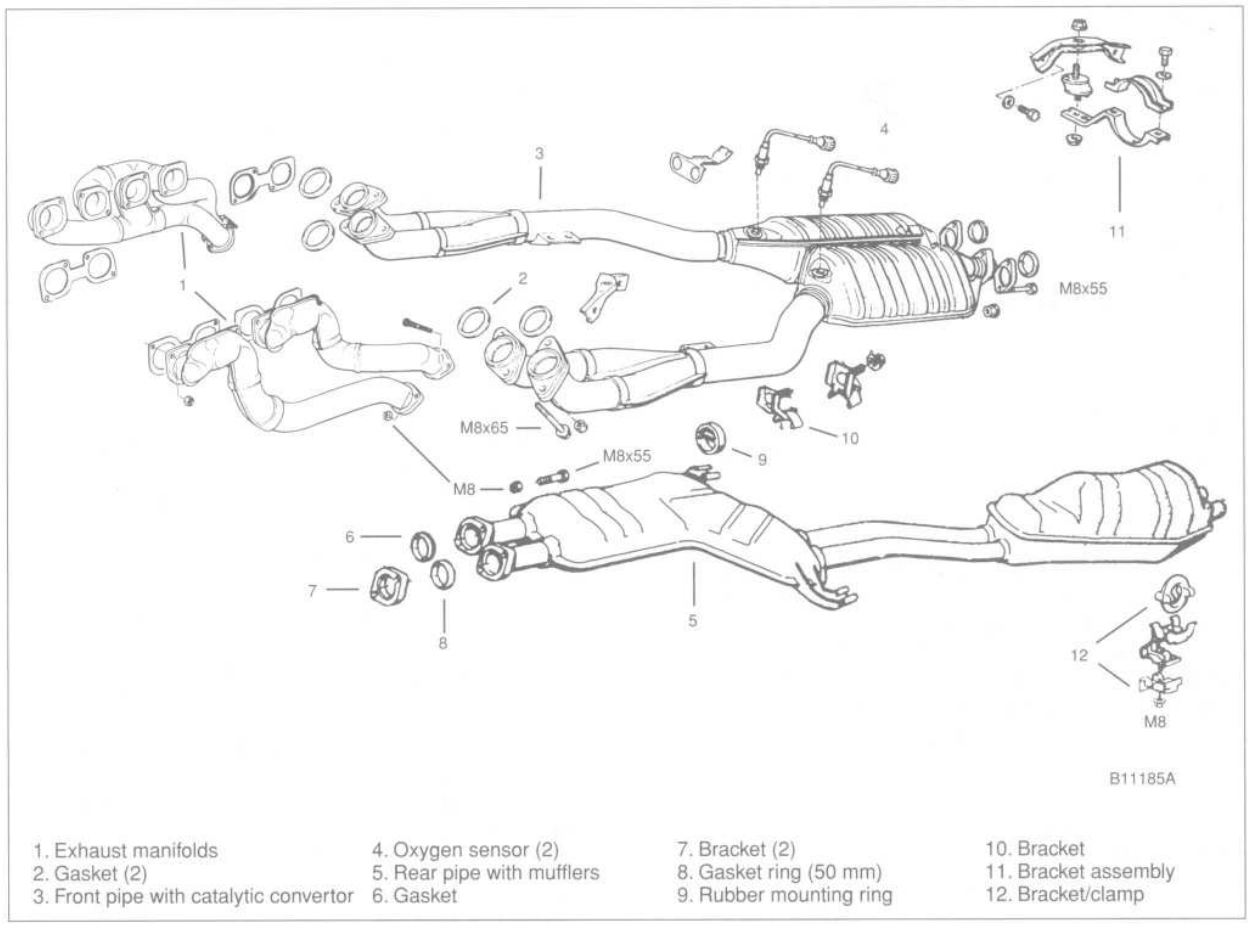

1. Exhaust manifolds
2. Gasket (2)
3. Front pipe with catalytic convertor
4. Oxygen sensor (2)
5. Rear pipe with mufflers
6. Gasket
7. Bracket (2)
8. Gasket ring (50 mm)
9. Rubber mounting ring
10. Bracket
11. Bracket assembly
12. Bracket/clamp

Fig. 4. Exploded view of exhaust system on 1994 and later 530i and 540i models with M60 engine.

EXHAUST SYSTEM REPLACEMENT

New fasteners, clamps, rubber mounts, and gaskets should be used when replacing exhaust components. A liberal application of penetrating oil to the exhaust system nuts and bolts in advance may make removal easier.

> ***WARNING —***
> - *The exhaust system and catalytic converter operate at very high temperatures. Allow these components to cool before servicing. Wear protective clothing to prevent burns. Do not use flammable chemicals near a hot catalytic converter.*
> - *Old, corroded exhaust system components crumble easily and often have exposed sharp edges. To avoid injury, wear eye protection and heavy gloves when working with old exhaust parts.*

Exhaust system, removing and installing

This section covers removing the exhaust system as a complete unit. Once the complete system is removed from the car, individual pipes and mufflers can be more easily replaced.

1. With exhaust system fully cold, raise and support car for access to exhaust system.

> ***WARNING —***
> *Do not work under a lifted car unless it is solidly supported on jack stands designed for that purpose. Never work under a car that is supported solely by a jack.*

2. Disconnect oxygen sensor connector(s).

3. Loosen and remove bolts holding front exhaust pipes to exhaust manifolds.

4. Disconnect exhaust support bracket assembly from transmission.

5. Detach rubber mounting rings from rear muffler.

6. Detach rubber mounting rings on both sides of intermediate muffler. Lower exhaust system to ground.

NOTE —
If the catalytic converter/front exhaust pipe assembly is to be replaced, transfer the oxygen sensor to the new pipe.

Tightening Torque
- Oxygen sensor to exhaust pipe . . . . . 55 Nm (41 ft-lb)

Installation is the reverse of removal. Make sure there is at least 20 mm ($^3/_4$ in.) of clearance between the exhaust system and the car body at every point. Loosely install all exhaust system mounting hardware and hangers before tightening the fasteners to their final torque. Coat the manifold studs with copper paste before installing nuts. Where applicable, tighten the front pipe with the semi-flexible compensator last when installing the front pipe to the manifolds.

Tightening Torques
- **M50/M20 engines**
  front exhaust pipe to exhaust manifold
  1st stage . . . . . 35 Nm (26 ft-lb)
  2nd stage . . . . . 55 Nm (41 ft-lb)
- **M30 engine**
  front exhaust pipe to exhaust manifold
  1st stage . . . . . 10 Nm (89 in-lb)
  2nd stage . . . . . .loosen nuts $1^1/_2$ turns

To prevent exhaust system rattles and vibration, the system should be slightly preloaded by pushing the rear clamping brackets forward about 7 mm ($^1/_4$ in.).

Tightening Torques
- Exhaust support bracket to transmission . . . . . 24 Nm (17 ft-lb)
- Exhaust system mounting clamps . . . 22 Nm (16 ft-lb)

Exhaust manifolds, removing and installing (M20, M30, M50 engines)

Always use new retaining nuts and gaskets when removing and installing the exhaust manifolds.

1. Working from beneath rear seat, disconnect negative (–) battery cable from battery.

WARNING —
Disconnecting the battery cables may erase fault codes stored in control unit memory.

2. On cars with battery mounted in engine compartment, remove battery from car and remove battery tray.

3. With exhaust system cold, raise and support car for access to exhaust system.

WARNING —
Do not work under a lifted car unless it is solidly supported on jack stands designed for that purpose. Never work under a car that is supported solely by a jack.

4. Unbolt front exhaust pipes from exhaust manifolds.

5. Remove exhaust support bracket from transmission.

6. Loosen and remove nuts from exhaust manifolds and remove manifolds. Discard nuts and gaskets.

Installation is the reverse of removal. Coat the exhaust manifold mounting studs with copper paste before installing the new nuts. Install the manifold gaskets with the arched side facing the manifolds.

Tightening Torques
- Exhaust manifold to cylinder head
  M50 engine . . . . . 20 Nm (15 ft-lb)
  M20, M30 engines . . . . . 22 Nm (17 ft-lb)
- **M50/M20 engines**
  Exhaust pipe to exhaust manifold
  1st stage . . . . . 35 Nm (26 ft-lb)
  2nd stage . . . . . 55 Nm (41 ft-lb)
- **M30 engine**
  Exhaust pipe to exhaust manifold
  1st stage . . . . . 10 Nm (89 in-lb)
  2nd stage . . . . . .loosen nuts $1^1/_2$ turns

Exhaust manifolds, removing and installing (M60 engine, left manifolds)

1. Working from beneath rear seat, disconnect negative (–) battery cable from battery.

WARNING —
Disconnecting the battery cables may erase fault codes stored in control unit memory.

2. With exhaust system cold, raise and support car for access to exhaust system.

WARNING —
Do not work under a lifted car unless it is solidly supported on jack stands designed for that purpose. Never work under a car that is supported solely by a jack.

3. Working beneath car, remove engine splash guard and then remove heat shields from left and right sides of front suspension crossmember.
4. Remove alternator. See **121 Battery, Starter, Alternator.**
5. Unbolt left front exhaust pipes from exhaust manifolds.
6. Remove exhaust support bracket assembly from transmission.
7. Remove cylinder head cover from left cylinder head. See **116 Cylinder Head and Valvetrain.**

NOTE —
Note ground strap at cylinder #7 and be sure to reinstall during assembly.

8. Remove upper section of air cleaner housing complete with air mass sensor, disconnecting and labeling connectors, ducting and hoses as necessary.
9. Working from underside of front suspension crossmember, remove mounting bolts from left and right engine mounts. Disconnect ground strap from engine mount bracket, where applicable.
10. Install engine lifting device to front and rear lifting points.
11. Remove exhaust manifold mounting nuts. Then raise engine just enough to facilitate removal of exhaust manifolds.

CAUTION —
Check that there is sufficient clearance at rear bulkhead when raising engine.

Installation is the reverse of removal. Coat the exhaust manifold mounting studs with copper paste before installing the new nuts. Install the manifold gaskets with the arched side facing the manifolds. Be sure to reinstall all ground straps earlier removed.

Exhaust manifolds, removing and installing (M60 engine, right manifolds)

1. Working from beneath rear seat, disconnect negative (–) battery cable from battery.

WARNING —
Disconnecting the battery cables may erase fault codes stored in control unit memory.

2. With exhaust system cold, raise and support car for access to exhaust system.

WARNING —
Do not work under a lifted car unless it is solidly supported on jack stands designed for that purpose. Never work under a car that is supported solely by a jack.

3. Working beneath car, remove engine splash guard and then remove heat shields from front suspension crossmember.
4. Unbolt right front exhaust pipes from exhaust manifolds.
5. Remove windshield washer reservoir from in front of shock tower and set aside.
6. Remove exhaust manifold mounting nuts. Remove manifolds from above, removing manifold for cylinders 2/4 first.

Installation is the reverse of removal. Coat the exhaust manifold mounting studs with copper paste before installing the new nuts. Install the manifold gaskets with the arched side facing the manifolds.

200 Transmission–General

GENERAL 200-1
AUTOMATIC TRANSMISSION 200-1
MANUAL TRANSMISSION AND CLUTCH 200-1
LOCATING TRANSMISSION ID CODES . . 200-2

TABLES
a. Automatic Transmission Technical Data 200-1
b. Manual Transmission Technical Data 200-2

GENERAL

This transmission general repair group covers drivetrain application information for BMW E34 cars.

All of the cars covered by this manual are equipped with an in-line drivetrain. The transmission is bolted directly to the rear of a 6- or 8-cylinder engine. A driveshaft connects the output shaft of the transmission to the final drive. The final drive is mounted to the rear suspension member and the body. Individual drive axles with integrated constant velocity joints transfer rotational power to the rear driven wheels.

NOTE —

Repair information for the final drive and the rear drive axles is covered in **331 Final Drive**.

AUTOMATIC TRANSMISSION

Four different automatic transmissions are used, depending on model and model year and/or production date. All of the automatic transmissions are electro-hydraulically controlled with either four or five forward speeds. **Table a** lists automatic transmission application information.

NOTE —

Repair information, including lubricating fluid specifications, for the automatic transmission is covered in **240 Automatic Transmission**.

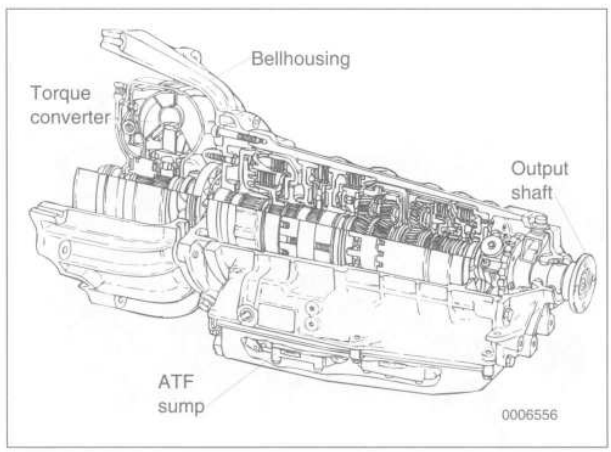

Fig. 1. Phantom view of 4-speed ZF automatic transmission.

MANUAL TRANSMISSION AND CLUTCH

Four different manual transmissions are used in the E34 cars, depending on model and model year. Most models are equipped with a five speed manual gearbox. The 540i-sport is equipped with a 6-speed manual transmission. **Table b** lists manual transmission application information.

Table a. Automatic Transmission Technical Data

Model	525i (1989-1990)	525i (1991-1995)		535i (1989-1993)	530i (1994-1995)	540i (1994-1995)
Type	4HP 22/EH	A4S 310R (THM-R1) 1991-93	1994-95	4HP 22/EH	A5S 310Z	A5S 560Z
Gear ratios						
1st	2.48	2.40	2.86	2.48	3.67	3.55
2nd	1.48	1.46	1.62	1.48	2.00	2.24
3rd	1.00	1.00	1.00	1.00	1.41	1.55
4th	0.73	0.72	0.72	0.73	1.00	1.00
5th	N/A	N/A	N/A	N/A	0.74	0.79
Reverse	2.09	2.00	2.00	2.09	4.10	3.68

The Getrag 260 G is a five-speed overdrive manual transmission. The Getrag S5D 250 G and the ZF S5D 310 Z are five speed direct transmissions. The S6S 560 G is a 6-speed over drive manual transmission. Manual transmission repair information is covered in **230 Manual Transmission**.

The clutch is hydraulically actuated. For more information on the clutch, see **210 Clutch**.

LOCATING TRANSMISSION ID CODES

On cars with manual transmission, the code letters and type numbers can typically be found on the top of the bellhousing. See Fig. 2.

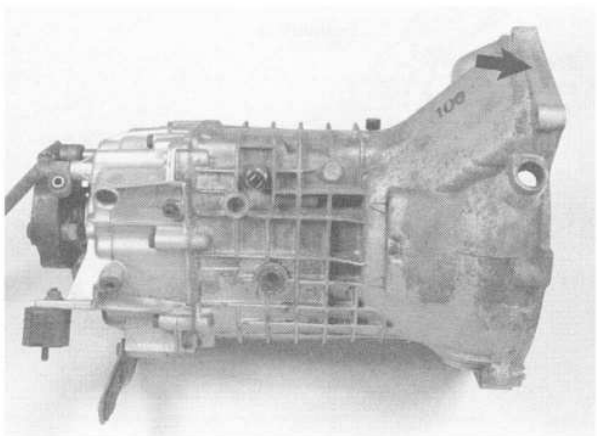

6263

Fig. 2. Typical location of manual transmission identification code letters. (Getrag 260 transmission shown).

On cars with automatic transmission, the code letters and type number are located on a data plate on the left side of the transmission housing, just behind the manual valve lever. See Fig. 3.

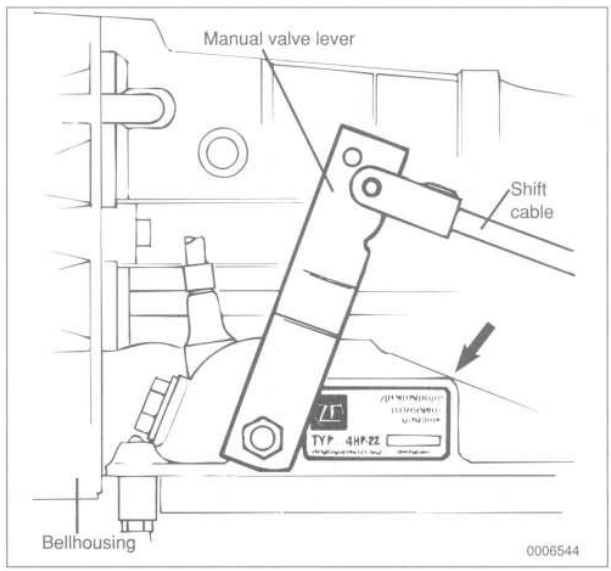

Fig. 3. Typical location of identification code letters on automatic transmission.

NOTE —

When replacing the transmission or related transmission components, such as the torque converter, the code letters on the replacement parts should correspond to those of the original parts.

Table b. Manual Transmission Technical Data

Model	525i (1989-1990)	525i (1991-1992)	525i (1992-1995)	535i (1989-1993)	530i (1994-1995)	540i (1994-1995)
Type	Getrag 260/5	S5D 310Z (up to 7-92)	S5D 250 G (from 7-92)	260/6	S5D 310Z	S6S 560G
Gear ratios						
1st	3.84	4.20	4.20	3.83	4.20	4.23
2nd	2.20	2.49	2.49	2.20	2.49	2.51
3rd	1.39	1.66	1.66	1.40	1.67	1.67
4th	1.00	1.24	1.24	1.00	1.24	1.23
5th	0.81	1.00	1.00	0.81	1.00	1.00
6th	N/A	N/A	N/A	N/A	N/A	0.83
Reverse	2.09	3.89	3.89	3.46	3.89	3.75

210 Clutch

GENERAL 210-1

CLUTCH HYDRAULIC 210-1
Clutch hydraulic system, bleeding and flushing. 210-2
Clutch master cylinder, replacing 210-2
Clutch slave cylinder, replacing 210-3

CLUTCH MECHANICAL 210-4
Clutch, removing 210-4
Clutch, inspecting and installing. 210-5

GENERAL

The repair group covers replacement of the clutch mechanical and clutch hydraulic components. Special tools may be required for some of the service described in this repair group. Read the procedures through before beginning a job.

NOTE —
See **200 Transmission–General** *for transmission application information.*

CLUTCH HYDRAULIC

The clutch is hydraulically actuated by master and slave cylinders. Clutch disc wear is automatically taken up by the pushrod travel of the slave cylinder, making periodic adjustment unnecessary. Fig. 1 is a schematic of the clutch assembly.

NOTE —
Although seal rebuild kits are available for the master and slave cylinders, replacement of leaking master or slave cylinders as complete units is suggested.

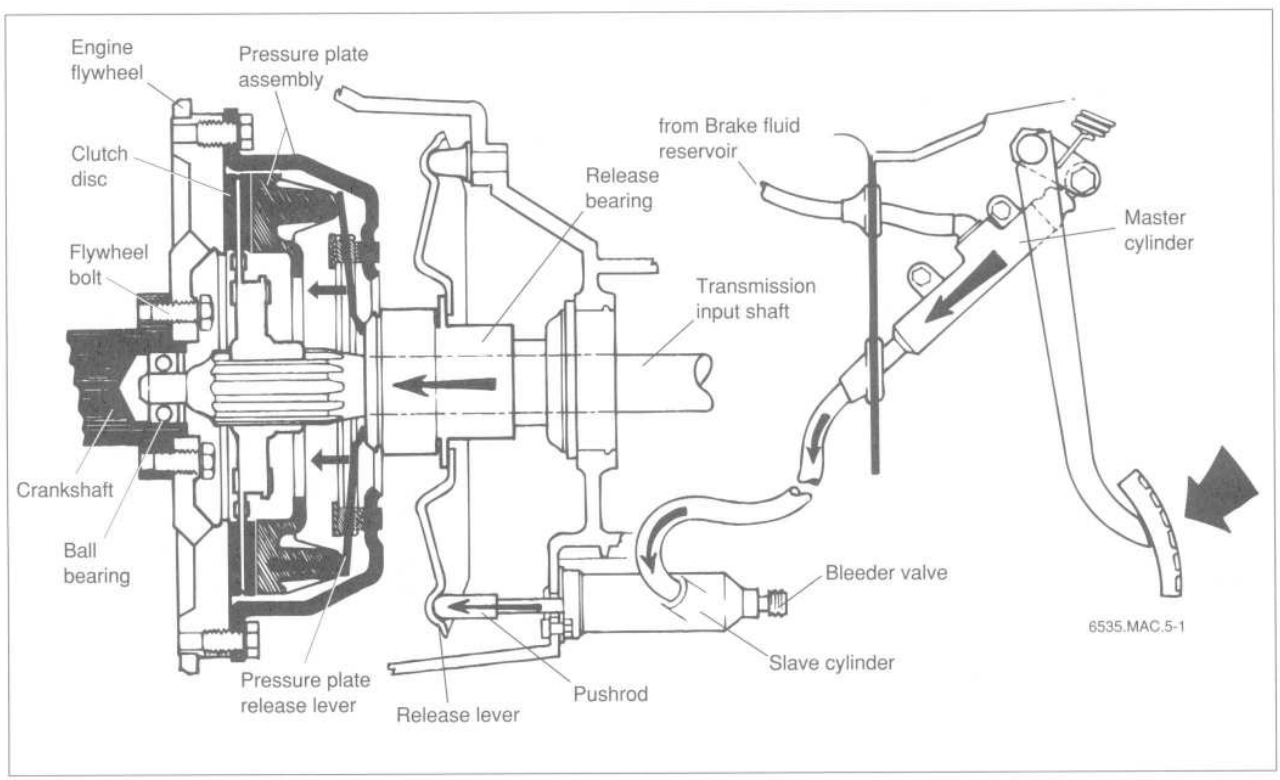

Fig. 1. Clutch assembly.

Clutch hydraulic system, bleeding and flushing

If the clutch/brake fluid is murky or muddy, or has not been changed within the last two years, it should be flushed from the clutch hydraulic circuit. Flushing the old fluid from the clutch lines is done using a brake system pressure bleeder.

1. Remove brake fluid reservoir cap and attach appropriate pressure bleeder to fluid reservoir as per manufacturer's instructions.

> ***CAUTION —***
> *Do not exceed 1 bar (14.5 psi) of pressure at the fluid reservoir.*

2. Connect a length of clear hose to slave cylinder bleeder valve and place open end of hose into clean container.
3. Open bleeder screw on slave cylinder.
4. Slowly operate clutch pedal several times. Close bleeder screw once fluid runs clear without air bubbles.
5. Check fluid reservoir and top off fluid level.

NOTE —
If there is air trapped in the lines, unbolt the slave cylinder from the transmission. Push the slave cylinder pushrod all the way in and then slowly release it. This will force any remaining air in the system into the fluid reservoir.

Clutch master cylinder, replacing

The clutch master cylinder is mounted to the pedal assembly, directly above the clutch pedal.

1. Disconnect negative (–) battery terminal at battery.
2. Remove brake fluid reservoir cap. Using a clean syringe, remove brake fluid from fluid reservoir.

> ***WARNING —***
> *Brake fluid is poisonous. Do not siphon brake fluid with your mouth. Wear hand and eye protection.*

3. Disconnect fluid feeder hose from the master cylinder. Be prepared to catch any leaking fluid.
4. Working on engine side of bulkhead, disconnect fluid line fitting from master cylinder.
5. Remove lower left instrument panel trim. On cars with SRS (airbag), remove the lower dashboard panel.
6. Remove eccentric bolt connecting master cylinder pushrod to clutch pedal. See Fig. 2.

NOTE —
Note the position of the "dot" on the head of the eccentric bolt. The dot must be facing either toward the master cylinder or away from the master cylinder, but not in between.

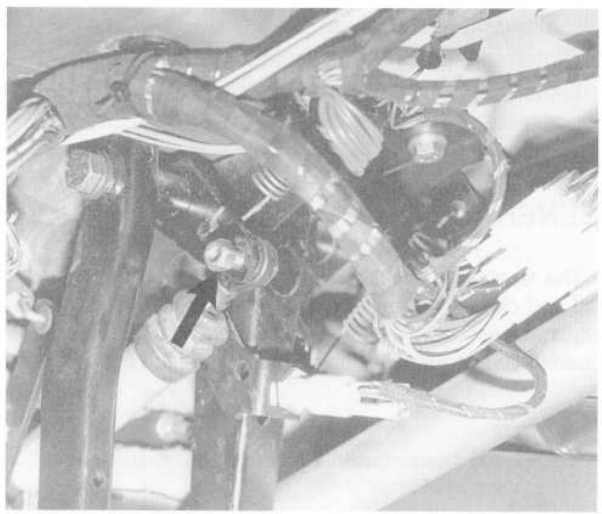

6271

Fig. 2. Clutch pedal pushrod eccentric bolt (**arrow**). Note position of dot on bolt head before loosening nut.

7. Remove bolts connecting clutch master cylinder to clutch pedal bracket and remove master cylinder.

> ***CAUTION —***
> *Brake fluid is damaging to paint. Any brake fluid that spills on the car should be cleaned off immediately.*

Installation is the reverse of removal. Install the pushrod eccentric bolt with the dot on the bolt head facing away from the clutch master cylinder.

NOTE —
On models with clutch pedal over-center helper spring, the spring should be correctly seated before installing the pushrod bolt. See Fig. 3.

Check the clutch pedal height as shown in Fig. 4. If the pedal adjustment is incorrect, loosen the eccentric bolt nut and rotate the bolt 180° (dot facing the master cylinder). Refill the brake fluid reservoir and then bleed the clutch hydraulic system as described under **Clutch hydraulic system, bleeding and flushing**.

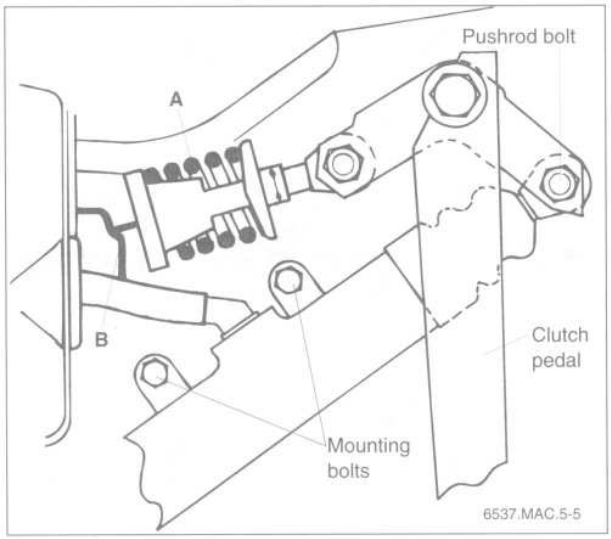

Fig. 3. Clutch pedal assembly. Note clutch spring seat (**A**) in recess (**B**).

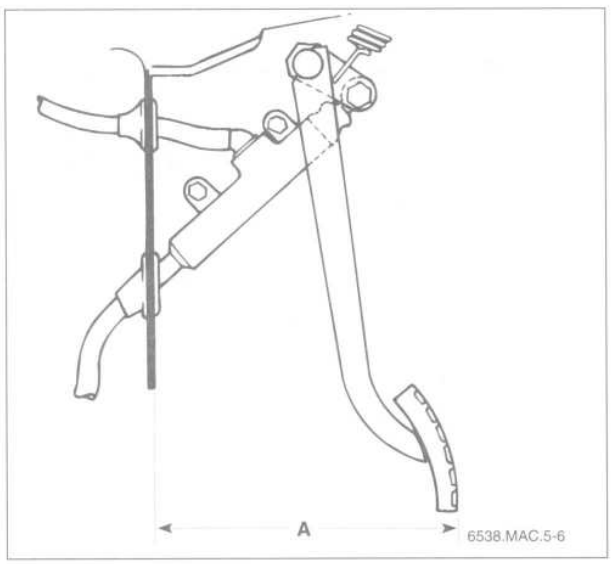

Fig. 4. Clutch pedal height is checked between bulkhead and pedal face (dimension **A**).

CAUTION —
The dot on the eccentric bolt must only be positioned in one of two positions; either facing away from the master cylinder or toward the master cylinder.

Clutch Pedal Adjustment

- Pedal face to bulkhead . . . 265+10 mm (10.4+0.4 in.)

Tightening torques

- Clutch master cylinder to console. . . . . 9 Nm (80 in-lb)
- Clutch pushrod to clutch pedal . . . . . 22 Nm (18 ft-lb)
- Fluid line to master cylinder . . . . . 16 Nm (12 ft-lb)

CAUTION —
• If making adjustments at the pushrod end, do not screw the pushrod end all the way in. This may cause the locknut to jam against the clutch pedal during operation. If pushrod length is changed significantly, check the locknut clearance with the clutch pedal fully depressed.

Tightening Torque

- Clutch master cylinder pushrod locknut . . . . . 6 Nm (53 in-lb)

Clutch slave cylinder, replacing

The slave cylinder is mounted to the left-hand (driver's) side of the transmission.

1. Remove brake fluid reservoir cap. Using a clean syringe, remove brake fluid from reservoir.

WARNING —
Brake fluid is poisonous. Do not siphon brake fluid with your mouth. Always dispose of old fluid properly.

2. Loosen fluid line fitting at slave cylinder. Unbolt slave cylinder from transmission and disconnect fluid pipe. Catch excess fluid in a container.

3. Inspect pushrod tip and the release lever for wear. The pushrod should be worn only on the tip.

NOTE —
The release lever should show wear only in the pushrod recess. Wear on the side of the pushrod tip, or wear on the release lever other than in the pushrod recess indicates misalignment.

Installation is the reverse of removal. Lightly coat the plastic pushrod tip with molybdenum disulfide grease (Molykote Longterm 2 or equivalent). Be sure the pushrod tip engages the recess in the clutch release lever during installation. Refill the brake fluid reservoir and bleed the clutch hydraulic system as described in **Clutch hydraulic system, bleeding and flushing**.

Tightening torques

- Slave cylinder to transmission . . . . . 24 Nm (18 ft-lb)
- Fluid pipe connection to slave cylinder . . . . . 13 to 16 Nm (10 to 12 ft-lb)

CLUTCH MECHANICAL

The transmission must be removed from the engine to access the clutch mechanical components. See **230 Manual Transmission**. Fig. 5 shows the clutch components that are normally replaced as part of a clutch overhaul job.

If there are signs of oil at the bottom of the transmission, check for a faulty rear crankshaft oil seal. Remove the flywheel to access the rear seal. A faulty seal should be replaced.

NOTE —
If the flywheel is removed, new bolts must be used when remounting the flywheel. The old bolts should not be reused.

Clutch, removing

1. Remove transmission from engine. See **230 Manual Transmission**.
2. Lock engine flywheel in position and unbolt pressure plate. Loosen bolts in stages until spring pressure is evenly relieved. See Fig. 5.

WARNING —
The clutch disc may contain asbestos fibers. Asbestos materials can cause asbestosis. Always wear an approved respirator and protective clothing when handling components containing asbestos. Do not use compressed air, do not grind, heat, weld, or sand on or near any asbestos materials.

3. Pull the release bearing off of the transmission input shaft. Remove the clutch release lever by sliding it out of the spring clip. See Fig. 6.

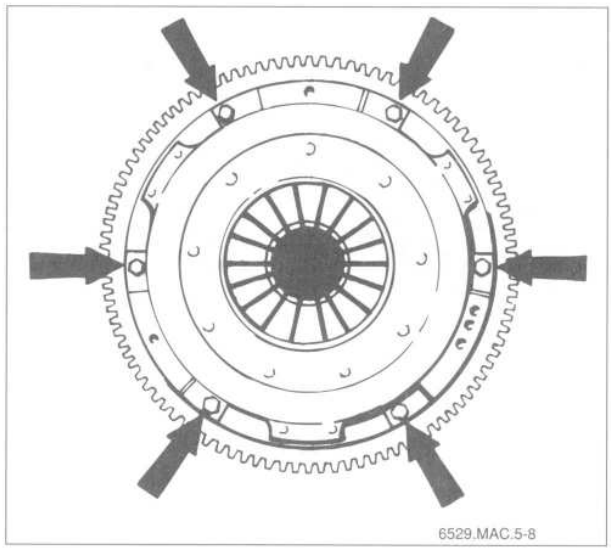

Fig. 5. Pressure plate mounting bolts (**arrows**).

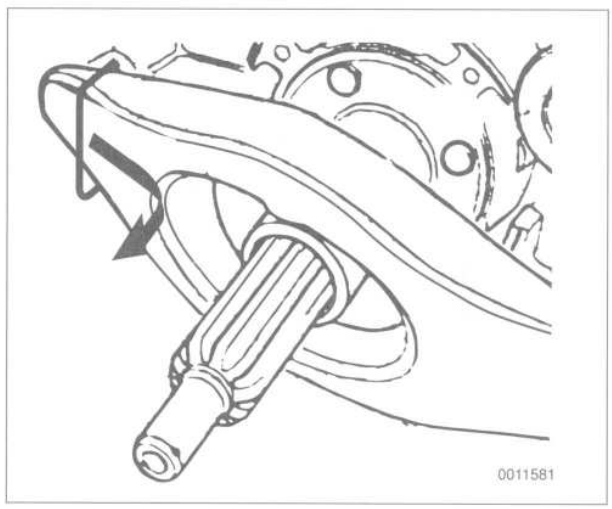

Fig. 6. Remove clutch release lever by removing from spring clip in direction of arrow.

Clutch, inspecting and installing

An alignment tool (clutch pilot tool) should be used to center the clutch disc to the pressure plate. Always use new clutch pressure plate bolts when installing the pressure plate to the flywheel.

1. Inspect clutch pressure plate for wear or damage. Replace pressure plate if any faults are found.
   - loose rivets
   - bent or misaligned release levers.
   - warped, cracked or scored friction surface

   NOTE —
   New pressure plates are normally coated with a corrosion inhibitor for storage. Use a grease-free solvent to clean the friction surface of new pressure plates before installation.

2. Clean flywheel friction surface and inspect it for wear, cracks, and scoring. Check for loose or worn guide pins. Replace flywheel if any faults are found.

3. Check clutch disc thickness, runout, and general condition. Check friction surface for oil contamination. Replace clutch disc if any faults are found.

Clutch Disc

- Clutch disc runout (max.) . . . . . 0.50 mm (0.020 in.)
- Clutch disc thickness (min.) . . . . . 7.5 mm (0.295 in.)

4. Clean release bearing guide sleeve on transmission. Clean input shaft splines.

5. Inspect the splines of the clutch disc and the transmission input shaft. Check that the clutch disc slides freely on the shaft.

6. Inspect clutch release bearing for smooth operation. Check for wear on bearing and lever contact surfaces. Check the release lever pivot pin for wear. Replace worn parts.

   NOTE —
   On 6-speed transmissions, the release lever spring clip and the release lever pivot pin should always be replaced.

7. Check grooved input shaft ball bearing in crankshaft center. Replace bearing if it does not rotate smoothly.

8. Assemble clutch disc and pressure plate assembly to flywheel. Thread new pressure plates bolts in hand tight.

   WARNING —
   Always use new pressure plate mounting bolts.

   NOTE —
   - *Make sure the pressure plate is aligned on the flywheel guide pins.*
   - *Be sure the clutch disc is installed correctly. The new disc should be marked with "engine side" and "transmission side".*

9. Center clutch disc to crankshaft using a clutch pilot tool. Tighten pressure plate mounting bolts evenly until disc is firmly held in place.

10. Remove the centering tool and finish torquing the bolts in a uniform pattern.

Tightening Torques

- Flywheel to crankshaft (use new bolts) . . . . . 105 Nm (77 ft-lb)
- Pressure plate to flywheel (use new bolts)
  8.8 grade . . . . . 24 Nm (18 ft-lb)
  10.9 grade . . . . . 34 Nm (25 ft-lb)

   NOTE —
   - *Bolt grade is marked on the bolt head.*

11. Lightly lubricate clutch disc splines and transmission input shaft splines.

    CAUTION —
    BMW recommends using a light coat of Microlube GL 261 on the clutch disc and transmission input shaft splines.

12. Lightly grease release lever bearing contact points. See Fig. 7. Install release lever.

13. Install release bearing, making sure bearing tabs are flush against the release lever. See Fig. 8. See note for special installation instructions.

    NOTE —
    Two types of the release bearings have been installed on the cars covered by this manual. 1992 and later cars and all replacement bearings from BMW have a plastic guide sleeve. No lubrication should be used on the plastic guide sleeve during installation. Earlier style bearings with an aluminum guide sleeve should be lightly lubricated with molybdenum disulfide grease (Molykote Longterm 2 or equivalent).

14. Remove flywheel holding fixture and reinstall transmission. See **230 Manual Transmission**.

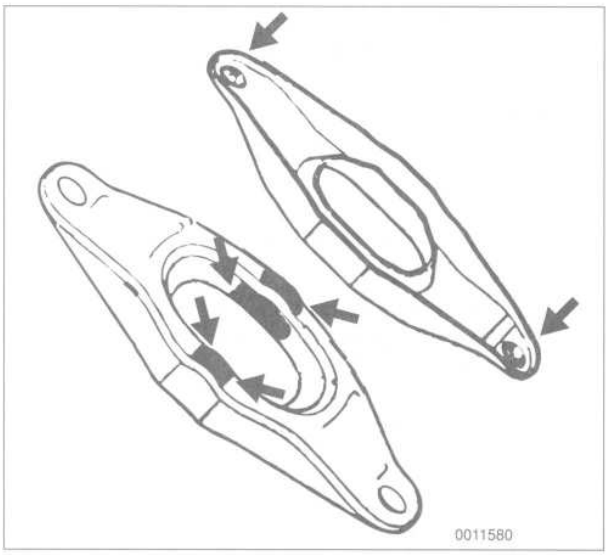

Fig. 7. Contact points on release lever to be greased (**arrows**).

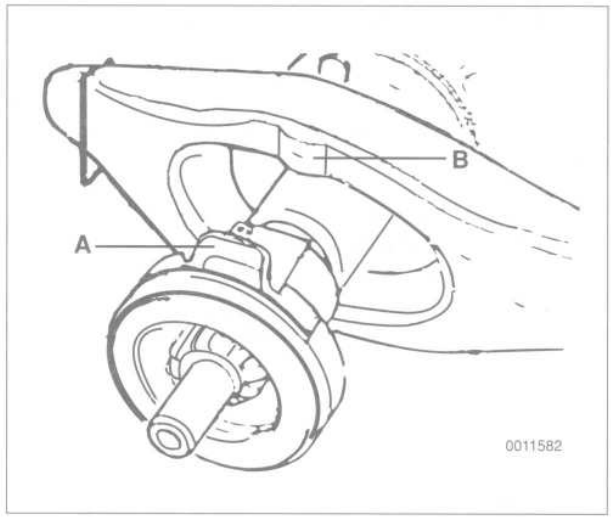

Fig. 8. Clutch release bearing correctly installed. Bearing tabs (**A**) align with contact points (**B**) on release lever.

NOTE —

To help align the input shaft in the clutch disc, rotate the transmission output shaft slowly as the transmission is seated.

230 Manual Transmission

GENERAL 230-1

TRANSMISSION SERVICE 230-1
Transmission oil, checking and replacing 230-1
Transmission Oil Seals 230-2
Output shaft oil seal, replacing (transmission installed) 230-2
Selector shaft oil seal, replacing (transmission installed) 230-3
Input shaft oil seal, replacing (transmission removed) 230-4
Back-up light switch, replacing 230-4

TRANSMISSION REMOVAL AND INSTALLATION 230-5
Transmission, removing and installing 230-5

TABLES
a. Manual Transmission Applications 230-1

GENERAL

This repair group covers external transmission service, including removal and installation of the transmission unit. Internal transmission repair is not covered here. Special press tools and procedures are required to disassemble and service the internal geartrain. For additional transmission application information, see **200 Transmission–General**.

Manual Transmission Applications

- 525i
  - M20 engine . . . . . Getrag 260/5
  - M50 engine (up to 7/92) . . . . . .ZF S5D 310 Z
  - M50 engine (from 7/92) . . . . . Getrag S5D 250 G
- 530i . . . . . .ZF S5D 310 Z
- 535i . . . . . Getrag 260/6
- 540i . . . . . Getrag S6S 560 G

TRANSMISSION SERVICE

Transmission oil, checking and replacing

Manual transmissions installed on the E34 cars are normally filled with automatic transmission fluid (ATF), although alternative lubricants may be used depending on transmission type, gear noise levels, and shifting effort in cold climates.

NOTE —

- *Manual transmissions filled with ATF use 17mm external hex drain and fill plugs. In addition, a red fluid specification label with the markings "ATF-OIL!" is attached to the right-hand side of the bellhousing.*
- *Some manual transmissions may be filled with alternative lubricants, such as SAE 80 gear oil or single-grade engine oil. See an authorized BMW dealer for additional BMW-approved operating fluids.*

1. Drive car for a few miles to warm up transmission oil.
2. Remove filler plug on side of transmission and check oil level. See Fig. 1.
   - Oil level should be just flush with bottom of filler plug hole (i.e. if more oil is added it would run out of hole).

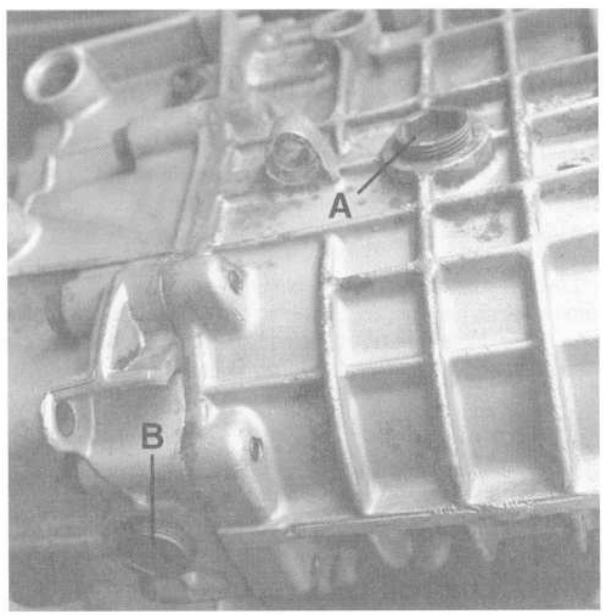

5020

Fig. 1. Remove oil filler plug (**A**) to check transmission lubricant level. Remove oil drain plug (**B**) to drain lubricant.

NOTE —

Check and fill transmission with the car on level surface.

3. Place drain pan below oil drain plug. Remove drain plug. Reinstall and torque drain plug when oil is completely drained.

4. Slowly add oil through filler hole until it begins to overflow. When no more oil can be added, reinstall and tighten filler plug.

Oil Capacity

- S5D 310 Z . . . . . 1.2 liters (1.27qts.)
- S5D 250 G . . . . . 1.0 liter (1.1 qts.)
- 260/5, 260/6 G . . . . . 1.25 liter (1.3 qts.)
- S6S 560 G . . . . . 2.3 liters (2.45 qts.)

Tightening Torques

- Manual transmission drain or fill plug
  250 G, S5D 260G, S5D 310Z . . . . . 50 Nm (37 ft-lb)
  S6D 560 G . . . . . 52 Nm (38 ft-lb)

NOTE —

One method of filling the transmission is to use a length of clear plastic tubing (approx. 5 feet) inserted into the fill hole and extended up into the engine compartment. Attach a funnel to one end and slowly fill the transmission from above.

Transmission Oil Seals

The output shaft, selector shaft and input shaft oil seals can be replaced without any major disassembly of the transmission. In addition, two of the three seals can be replaced with the unit installed in the car.

Low gear oil level due to a faulty oil seal may cause problems such as hard shifting, jumping out of gear, and transmission noise. Note that oil at the bottom of the bellhousing can also be due to a leaking rear crankshaft seal.

NOTE —

Before assuming faulty transmission seals, check the vent on the top of the case. A clogged or damaged vent can cause excess internal pressure and oil loss.

Output shaft oil seal, replacing (transmission installed)

1. Remove complete exhaust system. See **180 Exhaust System**.

2. Disconnect driveshaft from transmission. See **260 Driveshaft**.

3. Remove output shaft flange.
   - Bend back and remove nut lockplate. See Fig. 2.
   - Hold flange steady and remove the collar nut (use 30 mm thin-walled, deep socket).
   - Remove flange. If necessary, use a puller.

NOTE —

A thin-wall socket can be made by grinding the outer surface of an ordinary socket.

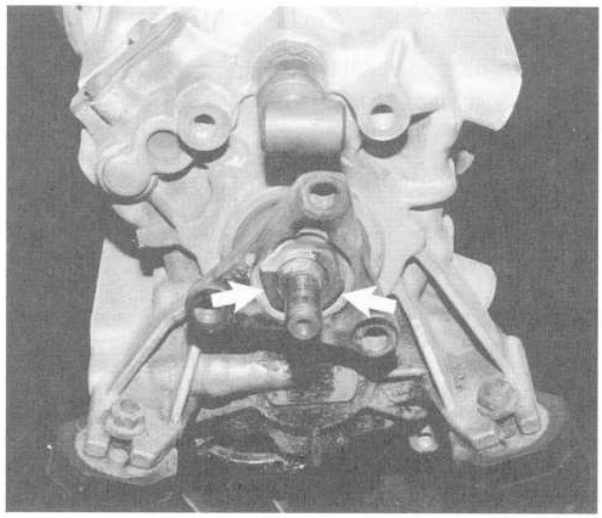

6261

Fig. 2. Output flange lockplate tabs (**arrows**). Pry off lockplate by bending tabs out of grooves.

4. Using a seal remover or screwdriver, pry out old seal. Lubricate new seal with oil and drive into place.

CAUTION —

Do not damage the transmission case housing when prying out the old seal. A damaged case can result in oil leaks.

5. Reinstall flange to output shaft (and shims, if applicable). Coat bearing surface of collar nut with sealer and install nut.

NOTE —

- *BMW recommends the use of a sealer such as Loctite® 242 when installing the collar nut to prevent oil from leaking past the threaded shaft.*
- *On Getrag S5D 250 G transmission, BMW recommends heating the output flange to about 176°F (80°C) to aid in installation.*

6. Tighten collar nut in two stages. Install new lockplate. Bend tabs into flange grooves.

Tightening Torques

- Output flange to output shaft
  stage I . . . . . 190 Nm (140 ft-lb)
  stage II (after loosening) . . . . . 120 Nm (89 ft-lb)

7. Reinstall the driveshaft and exhaust system.

8. Check gear oil level, topping up as necessary. See **Transmission oil, checking and replacing**.

Selector shaft oil seal, replacing (transmission installed)

1. Remove complete exhaust system. See **180 Exhaust System**.

2. Disconnect driveshaft from transmission. See **260 Driveshaft**.

3. Place transmission in 5th gear. Disconnect selector rod coupling from selector shaft by releasing spring sleeve and pushing out pin. See Fig. 3.

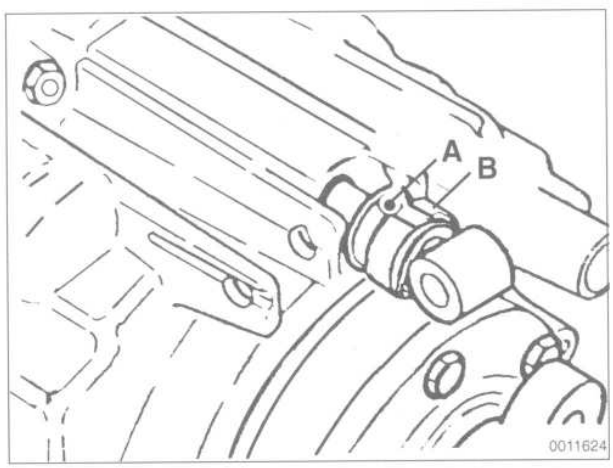

Fig. 3. Selector rod coupling. Slide locking sleeve (**B**) and push pin (**A**) through to remove coupling.

WARNING —
Do not mar the housing when removing oil seal.

NOTE —
To improve access to the selector shaft, support the transmission from below and remove the bolts from the transmission crossmember. Then lower the transmission for better access the selector shaft.

4. Pry out seal using pick or small screwdriver. See Fig. 4.

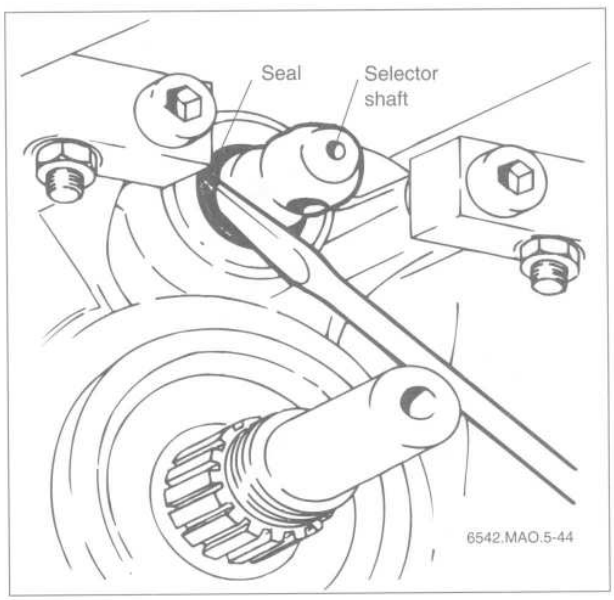

Fig. 4. Selector shaft oil seal being pried out with screwdriver.

WARNING —
Do not mar the housing when removing the seal.

5. Lubricate new seal with oil and drive into place.

6. Reinstall selector rod coupling, driveshaft, and exhaust system.

NOTE —
Install selector rod coupling with the offset toward the left when looking at the rear of the transmission.

Tightening Torque

- Rear transmission support
  to body (bolt) . . . . . 23 Nm (17 ft-lb)

7. Check gear oil level, topping up as necessary. See **Transmission oil, checking and replacing**.

Input shaft oil seal, replacing (transmission removed)

1. Remove transmission as described later.

2. Remove clutch release bearing and release lever from inside bellhousing.

3. Remove bolts for clutch release-bearing guide sleeve, noting bolt lengths. Remove the sleeve and any spacers under it. See Fig. 5.

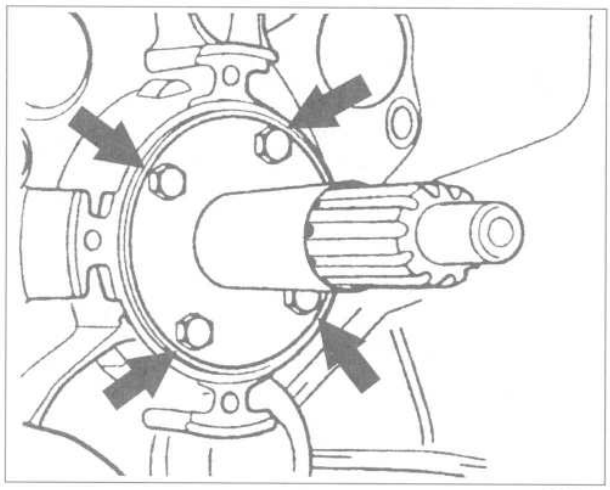

0011640

Fig. 5. Clutch release bearing guide sleeve bolts. (S5D 250G transmission shown).

4. On S5D 310 Z, S5D 250G, and S6S 560 G transmissions, locate two indents in seal housing. Use a punch or scribe to punch holes in housing at indents. Thread two sheet metal screws into holes and pull seal out using screws. See Fig. 6.

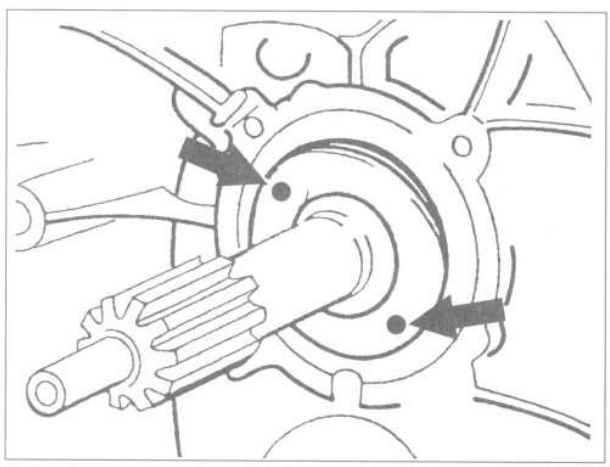

0011641

Fig. 6. Indents at oil seal housing (**A**) for all transmissions with seal installed in transmission case. Use care not to scratch input shaft when removing/installing seal.

NOTE —

Use care not to scratch or damage input shaft. Use a protective sleeve or tape the shaft when removing and installing the seal on S5D 310Z, S5D 250 G and S6S 560 G transmissions.

5. On Getrag 260 transmission, drive old seal from guide tube.

6. Lubricate new seal with transmission oil and drive into place.

7. Thoroughly clean guide sleeve mounting bolts, sealing surfaces, and threads in case. Apply sealer (Loctite® 243 or equivalent) to guide sleeve sealing surface and bolts. Reinstall guide sleeve and spacer(s).

Tightening Torques

- Guide sleeve to transmission
  - M8x22 . . . . . 18 Nm (13 ft-lb)
  - M8x30 . . . . . 25 Nm (18 ft-lb)
  - M6x10 . . . . . 10 Nm (89 in-lb)

Back-up light switch, replacing

1. Raise the vehicle to gain access to the underside of the car.

> ***WARNING —***
> *Make sure the car is stable and well supported at all times. Use a professional automotive lift or jack stands designed for the purpose. A floor jack is not adequate support.*

2. Working on the side of the transmission, disconnect harness connector from switch and unscrew switch from transmission.

NOTE —

Switch location varies depending on transmission application.

3. Install and tighten new switch. Reconnect harness connector.

4. Check gear oil level. See **Transmission oil, checking and replacing**.

> ***CAUTION —***
> *Do not overtighten back-up light switch.*

Tightening Torque

- Back-up light switch to transmission . . . . . 6–10 Nm (53–89 in-lb)

TRANSMISSION REMOVAL AND INSTALLATION

Transmission, removing and installing

Removal of the transmission is best accomplished on a lift using a transmission jack. Use caution and safe workshop practices when working beneath the car and lowering the transmission.

Torx® head bolts are used to mount the transmission to the bellhousing. Be sure to have the appropriate tools on hand before starting the job.

1. Disconnect negative (–) battery cable.
2. Raise the vehicle to gain access to the underside of the car.

> ***WARNING —***
> *Make sure the car is stable and well supported at all times. Use a professional automotive lift or jack stands designed for the purpose. A floor jack is not adequate support.*

3. Disconnect harness connector from reverse light switch on transmission.
4. Remove complete exhaust system and heat shields See **180 Exhaust System**.

> ***NOTE —***
> *Disconnect the oxygen sensor harness connector before lowering exhaust system.*

5. Remove driveshaft. See **260 Driveshaft**.

> ***NOTE —***
> *It is not necessary to fully remove the driveshaft. As an alternative, unbolt the driveshaft flex-disc from the transmission flange and unbolt the driveshaft center bearing support from the body. Then bend the driveshaft downwards in the center to disconnect. Use stiff wire to hold the driveshaft in place.*

6. Disconnect shift rod from transmission selector shaft. Disconnect shift console from top of transmission. See **250 Gearshift Linkage**.
7. Unbolt clutch slave cylinder from side of transmission. Do not disconnect fluid hose. Suspend slave cylinder from body using stiff wire.

> ***CAUTION —***
> *Do not operate clutch with slave cylinder removed from transmission.*

8. Support transmission from below with jack. Unbolt transmission cross-support and bracket. Lower transmission/engine assembly until it rests on front crossmember.

> ***NOTE —***
> *On cars with M50 engine, place a block of wood between the front stabilizer bar and the engine block before lowering the transmission/engine assembly.*

9. Remove transmission mounting bolts (Torx® head). Note length and location of bolts. See Fig. 7.

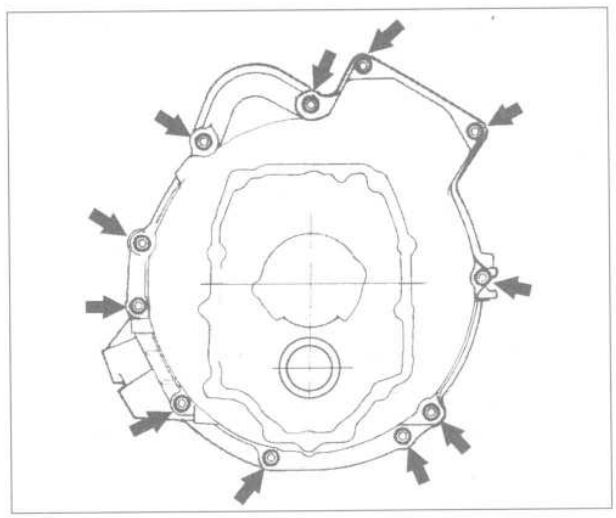

0011642

Fig. 7. Transmission mounting bolts.

> ***CAUTION —***
> *At no time should the weight of the transmission be supported by the transmission input shaft.*

10. Separate transmission from engine. Do not place any strain on transmission input shaft. Lower jack and remove transmission. Mark location of aligning dowels in engine block.

> ***WARNING —***
> *Make sure the car is stable and well supported at all times. Use a professional automotive lift or jack stands designed for the purpose. A floor jack alone is not adequate support.*

Installation is the reverse of removal. Lightly lubricate the transmission input shaft with Microlube GL 261 before installing. Be sure cylinder block dowels are correctly located. Center the rear of transmission in the driveshaft tunnel before tightening the transmission support bracket. Installation tightening torques are given below.

CAUTION —

BMW recommends using Microlube GL 261 on the clutch disc and transmission input shaft splines. Otherwise the clutch disc may bind on the input shaft and cause hard shifting. This lubricant is available under the BMW Part No. 81 22 9 407 436.

NOTE —

Washers should always be used with Torx®-head bolts. Installing bolts without washers will make them difficult to loosen.

Tightening Torques

- Transmission to engine (Torx®-head)
  - M8 . . . . . 23 Nm (17 ft-lb)
  - M10 . . . . . 43 Nm (32 ft-lb)
  - M12 . . . . . 72 Nm (53 ft-lb)
- Rear transmission support to body (bolt) . . . . . 23 Nm (17 ft-lb)
- Rubber mount to transmission or bracket (nut) . . . . . 43 Nm (32 ft-lb)
- Transmission drain plug/fill plug . . . . . 50 Nm (37 ft-lb)

Install the driveshaft and preload the center bearing bracket as described in **250 Driveshaft**. Refill transmission with appropriate lubricant before starting or towing the car. See **Transmission oil, checking and replacing**.

240 Automatic Transmission

GENERAL 240-1

TROUBLESHOOTING 240-2

DIAGNOSTIC TESTING 240-4
Stall speed, checking 240-4
ATF main pressure, checking 240-4

TRANSMISSION SERVICE 240-5
Automatic transmission–4 HP 22/EH removing and installing 240-5
Automatic transmission–A4S 310R removing and installing 240-8
Automatic transmission–A5S 310Z, A5S 560Z, removing and installing 240-9
ATF service–4 HP 22/EH 240-12
ATF service–A4S 310R 240-14
ATF service–A5S 310Z 240-15
ATF service–A5S 560Z 240-16
Automatic Transmission Seal Replacement . 240-17
Torque Converter Seal. 240-17
Output Shaft Seal 240-17
Manual Valve Seal 240-18

TABLES

a. Automatic Transmission Applications 240-1
b. Automatic Transmission Troubleshooting. 240-3
c. A/T Stall Speed Specifications 240-4
d. A/T Main Pressures. 240-5
e. ATF Level vs. Temperature–A4S 310R 240-15

GENERAL

This repair group covers basic automatic transmission service, including fluid service and unit removal and installation. Unit tear down and overhaul is not covered here.

Due to different power characteristics and performance requirements, four different automatic transmissions are used on the cars covered by this manual. All transmissions are electronically-controlled and fully adaptive. See **Table a**.

NOTE —

Additional automatic transmission application information is given in **200 Transmission—General**.

The transmissions are identified by code letters. The code letters are located on a data plate on the left side of the transmission housing, just behind the manual valve lever.

NOTE —

- *Internal repairs to the automatic transmission require special service equipment and knowledge. If it is determined that internal service is needed, consult an authorized BMW dealer about a factory reconditioned unit or a transmission rebuild.*
- *Driveshaft and final drive repair information is covered in* **260 Driveshaft**.

The transmission case contains the ATF pump, the hydraulic controls, and the planetary gear system. The planetary gear system is lubricated by ATF, circulated through the transmission by the ATF pump. The ATF does not circulate unless the engine is running. See Fig. 1.

Table a. Automatic Transmission Applications

Model	525i (1989-1990)	525i (1991-1995)	535i (1989-1993)	530i (1994-1995)	540i (1994-1995)
Type	4HP 22/EH	A4S 310R	4HP 22/EH	A5S 310Z	A5S 560Z
Forward speeds	4-speed	4-speed	4-speed	5-speed	5-speed

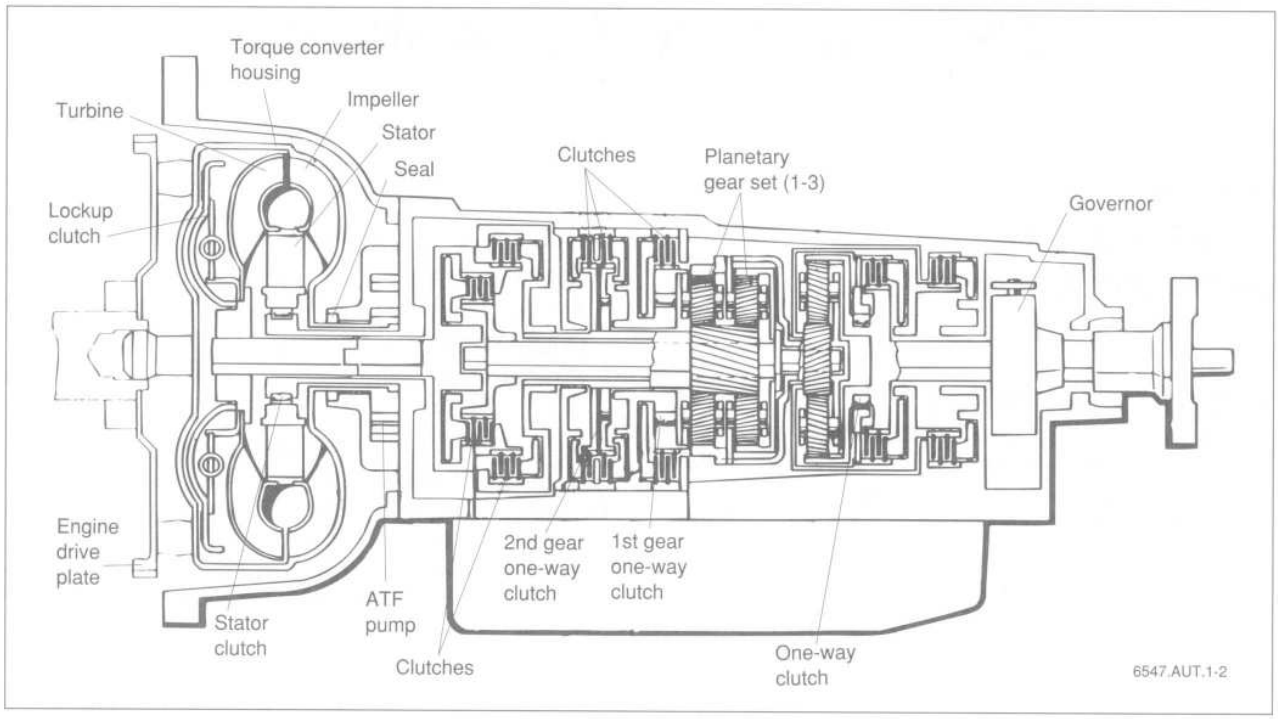

Fig. 1. Schematic view of 4-speed ZF 4 HP 22/EH automatic transmission.

TROUBLESHOOTING

Begin troubleshooting by checking the ATF condition and level. Check to see if the fluid is dirty or has a burned odor. A burned odor usually indicates overheated fluid. This may be accompanied by burned clutches, as well as friction material that may be clogging valve body passages. Minor automatic transmission problems can often be corrected by draining and refilling the transmission with new ATF.

NOTE —

Most transmissions used on the E34 cars are not equipped with fluid level dipsticks. Checking the ATF level on these transmissions must be done while monitoring the ATF temperature with the engine idling. The BMW dealer is equipped with the special equipment to make this check. If in doubt about the fluid level, one option is to completely drain the old fluid and add the specified amount of new fluid. See **ATF Service**.

Inspect the transmission for external damage, loose or missing fasteners or electrical connectors, and obvious leaks. Many automatic transmission problems can be traced to an incorrect ATF level, or faulty electronic controls.

Table b lists symptoms of automatic transmission problems, their probable causes, and recommended corrective actions. Numbers in bold type indicate the repair heading or repair group where the appropriate test and repair procedures can be found.

NOTE —

- *Selector lever and the gearshift linkage repair information is covered in* **250 Gearshift Linkage**.
- *Accelerator pedal adjustment information is covered in* **350 Pedals**.

Table b. Automatic Transmission Troubleshooting

Symptom	Probable cause	Corrective action
1. Park does not hold	a. Selector lever linkage misadjusted. b. Parking pawl or pawl spring broken.	a. Adjust selector lever linkage. **250 Gearshift Linkage** b. Transmission must be removed and partially disassembled to access parking pawl.
2. No Drive (car will not move)	a. ATF level low. b. Selector lever linkage misadjusted. c. Sticking pressure valves, faulty ATF pump, or broken gear or shaft.	a. Check and if necessary correct ATF level. See **ATF service** b. Adjust linkage. **250 Gearshift Linkage** c. Test ATF main pressure. See **Diagnostic Tests**
3. Irregular drive in all forward gears	a. ATF level low. b. ATF pump strainer (filter) partially clogged. c. Transmission range switch faulty. d. Internal transmission damage.	a. Check ATF level. See **ATF service** b. Remove ATF sump. Clean or replace filter screen. See **ATF service** c. Replace transmission range switch. See **Transmission Service** d. Overhaul or replace transmission.
4. Transmission slips during cornering	a. ATF level low. b. Clogged ATF strainer.	a. Check ATF level. See **ATF service** b. Clean/replace strainer. See **ATF service**
5. ATF smells burned, dark colored	a. Damaged clutch friction linings, internal faults	a. Overhaul or replace transmission.
6. Selector lever will not move	a. Selector lever linkage binding b. Internal transmission failure. c. Shift-lock faulty (if applicable).	a. Check and adjust linkage. **250 Gearshift Linkage** b. Overhaul or replace transmission. c. Check shift-lock solenoid. See **250 Gearshift Linkage**
7. Hard jolt when moving selector lever from **N** to **D** or **R**	a. Idle speed too high b. ATF level low. c. Faulty transmission range switch. d. Internal transmission fault.	a. Check engine idle speed. See **130 Fuel Injection–DME** b. Check and correct ATF level. See **ATF service** c. Replace transmission range switch. See **250 Gearshift Linkage** d. Overhaul or replace transmission
8. Hard jolt on upshift or downshift	a. Faulty clutch(es). b. Valve body faulty. c. Transmission electronics faulty.	a. Overhaul or replace transmission b. Replace valve body. *Dealer service recommended* c. Check transmission electronic controls. *Dealer service recommended*
9. Vibration when accelerating quickly from a stop	a. Driveshaft vibration. b. Faulty clutch(es).	a. Check driveshaft U-joints, driveshaft center bearing, driveshaft alignment. See **260 Driveshaft** b. Overhaul or replace transmission. *Dealer service recommended*
10. Car cannot be started in **N** or **P**	a. Faulty transmission range switch.	a. Replace transmission range switch. See **250 Gearshift Linkage**
11. No upshift into 2nd, 3rd or 4th gear	a. Faulty transmission range switch. b. Transmission electronics faulty (valve body solenoid faulty). c. Valve body faulty. d. Transmission electronics faulty. e. Valve body solenoids faulty.	a. Replace transmission range switch. **250 Gearshift Linkage** b. Test valve body solenoid operation. *Dealer service recommended* c. Replace valve body. *Dealer service recommended* d. Check transmission electronic controls. *Dealer service recommended* e. Repair or replace valve body. *Dealer service recommended*
12. Upshift delayed in all gears	a. ATF level low. b. Valve body contaminated or plugged. c. Internal pressure valves sticking or faulty. d. Transmission electronics faulty.	a. Check and correct ATF level. See **ATF service**. b. Remove valve body and clean or replace. *Dealer service recommended* c. Overhaul or replace transmission. d. Check transmission electronic controls. *Dealer service recommended*

DIAGNOSTIC TESTING

NOTE —
In order for automatic transmission diagnostic testing to provide meaningful results, the engine must be running correctly (i.e., no mechanical faults and properly tuned).

Although most internal transmission problems cannot be fully diagnosed unless the unit is removed and disassembled, the tests given here may be helpful in pinpointing faults. To obtain accurate test results, the ATF must be clean, the correct type, in good condition (not previously overheated or burned), and at the proper level.

Stall speed, checking

The stall speed test is used mainly to check the torque converter and planetary gear system when there is no other apparent cause for transmission slippage. The term is somewhat misleading as the car is not actually stalled during the test. A precise tachometer should be used for the rpm measurement.

CAUTION —
The stall speed test should be as short as possible—never longer than 10 seconds. Prolonging the test will overheat the transmission and possibly damage the seals or internal components.

1. Drive car to warm engine and transmission to normal operating temperature. Turn engine off.
2. Connect tachometer according to instrument manufacturer's instructions. Start engine.

NOTE —
Position tachometer so that it can be read from the driver's seat.

3. Set parking brake and depress foot brake firmly.
4. Select transmission drive (D) range.
5. Press accelerator to floor for no more than 10 seconds. Record maximum rpm (stall speed).
   - Engine rpm should increase, then hold steady. **Table c** lists stall speed specifications.

WARNING —
Do not stand in front of or behind the car when the engine is running and tests are being made.

NOTE —
It is normal for the stall speed to be 125 rpm lower than specified for each 1,000 meters (3,200 ft.) above sea level. High ambient air temperature can also cause a drop in stall speed.

Table c. A/T Stall Speed Specifications

Transmission	Stall speed (rpm)
4 HP 22/EH	
525i	2300-2500
535i	2100-2300
A4S 310R	2200-2400
A5S 310Z	2075-2275
A5S 560Z	1871-2042

Stall speed that is below the specified range by a few hundred rpm is probably due to reduced engine performance. Stall speed that is below the specified range by 400 rpm or more indicates a faulty torque converter stator or ATF pump. Check the pump pressure as described below.

Stall speed above the specified range is caused either by low ATF level, or by slippage in the hydraulic or one-way clutches.

ATF main pressure, checking

A main pressure test will reveal internal leaks, sticking control valves, or other troubles in the hydraulic controls. The pressure gauge should have a range of 0 to 20 bar (0 to 300 psi) with a hose long enough to reach into the passenger compartment.

NOTE —
Engine idle speed must be correct when making a main pressure check.

1. Remove main pressure tap plug and connect pressure gauge to transmission tap. See Fig. 2.

NOTE —
Position pressure gauge so that it can be read from the driver's seat.

2. Drive car to warm transmission to normal operating temperature.
3. Park car and firmly set parking brake and block wheels. Have an assistant firmly push brake pedal. Be prepared to shut off engine.

WARNING —
Never stand in front of or behind the car when the engine is running and tests are being made.

4. Place selector lever in **D**. Pressure should be as shown in **Table d**.
5. On 4HP/22 EH and A4S 310R transmissions, shift transmission into **R**. Pressure should increase as listed.

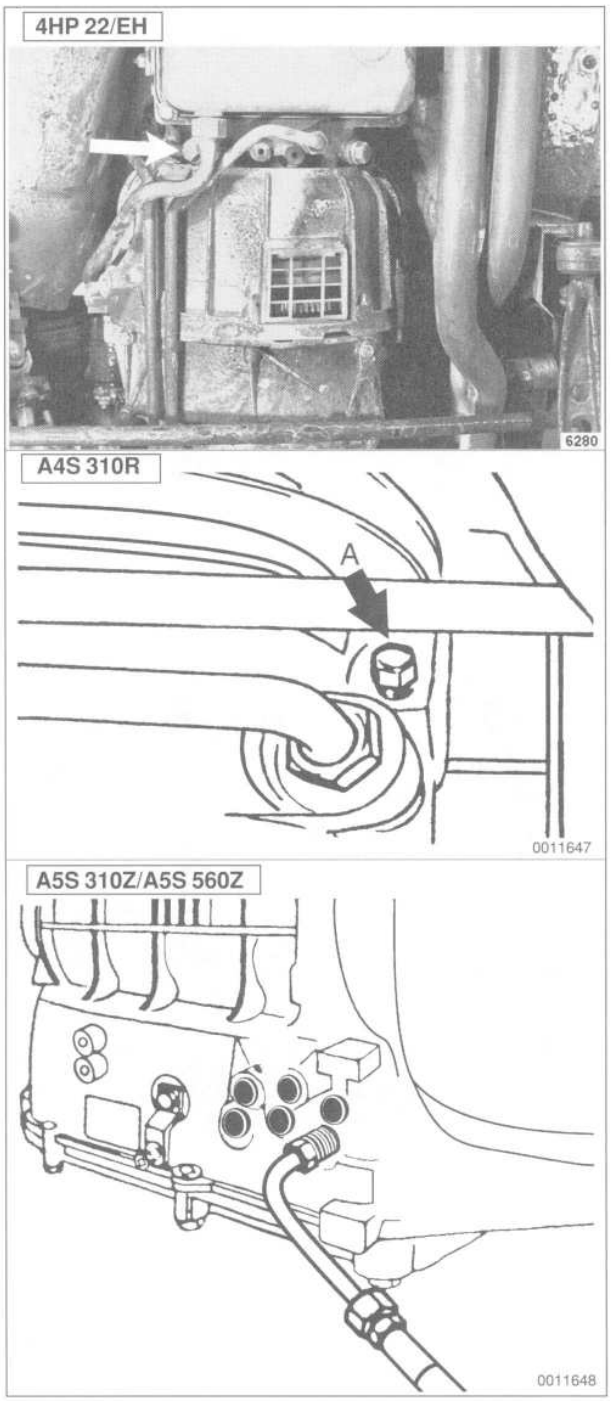

Fig. 2. Main pressure tap on transmissions.

6. Shift back to **D** and road test car. Test pressures are given in **Table d**.

7. When finished, stop engine, remove gauge and replace pressure tap plug. Replace any lost fluid.

Table d. A/T Main Pressures

Transmission	Test pressure @ engine rpm
4HP 22/EH	
D (drive)	5.5-7.7 bar (80-111 psi) at idle 9.0-11.0 bar (130-160 psi) at kickdown
R (rev.)	11-14 bar (160-189 psi) at idle 17.0-20.0 bar (246-290 psi) at kickdown
2,3,4	4.6-5.8 bar (67-84 psi) at idle
A4S 310R	
D (drive) mode: **M**	3.15-3.57 bar (46-52 psi) at 700
R (rev.) mode: **M** or **A**	3.90-4.41 bar (56-64 psi) at 700
A5S 310Z	
P (park)	5.4-6.4 bar (78-93 psi) at idle
A5S 560Z	
P (park)	5.4-6.4 bar (78-93 psi) at idle

Tightening Torque

- Pressure tap plug . . . . . 43 Nm (32 ft-lb)

Pressure that is higher or lower than specified usually indicates a malfunctioning valve body or valve body solenoid valves. The valve body can be removed, cleaned, and reinstalled with the transmission in place by removing ATF sump and filter screen.

> ***CAUTION —***
> *The valve body contains many precision parts that must be reassembled in their exact locations. It is recommended that valve body repairs be left to an authorized BMW dealer or other qualified repair shop.*

Low pressure may also indicate a worn ATF pump or internal ATF pump leak past seals, gaskets, or metal mating surfaces. These repairs require that the transmission be removed and disassembled.

TRANSMISSION SERVICE

Automatic transmission–4 HP 22/EH removing and installing

Removal of the transmission requires a transmission jack or a floor jack with transmission adaptor. Use extreme caution when working beneath the car and lowering the transmission. Torx® sockets will be needed to remove the bellhousing bolts.

When installing a new or rebuilt transmission, the ATF cooler and lines must be blown clean with compressed air and then thoroughly flushed twice with clean ATF.

1. Disconnect negative (-) and positive (+) battery cables from battery, in that order.

2. Remove complete exhaust system and exhaust system heat shields. See **180 Exhaust System**.

3. Position selector lever in park. Disconnect selector lever cable from selector lever on transmission. See Fig. 3.

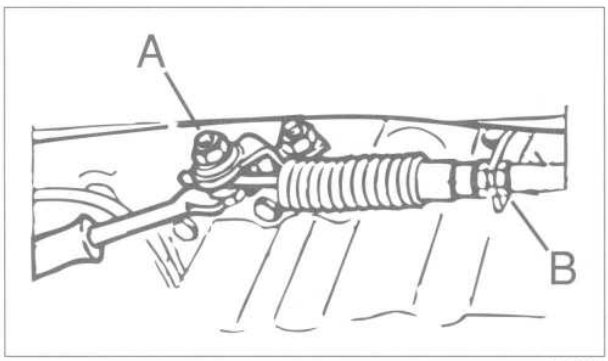

0011585

Fig. 3. Selector lever cable at transmission. Counterhold clamping sleeve when loosening cable nut (**A**). Also remove cable from bracket (**B**).

4. Support transmission from below using transmission jack. Unbolt transmission support crossmember from body.

5. Disconnect driveshaft from the transmission end (unbolt flex disc from transmission flange).

NOTE —
Discard driveshaft mounting nuts. They are single use self-locking nuts.

6. Drain the transmission by removing the ATF sump drain plug. See Fig. 4.

7. Remove ATF filler tube and ATF cooler lines from transmission. Plug the open lines and holes to prevent contamination.

8. Disconnect electrical harness connector(s) from transmission.

9. On 525i models, unbolt transmission bellhousing reinforcement plate. See Fig. 5.

10. Remove torque converter mounting bolts (3) from the perimeter of driveplate. Turn driveplate to access bolts.

NOTE —
On 535i models, it is necessary to first remove the cap from the opening in the oil pan to access the torque converter bolts.

11. Remove the bolts that hold the transmission bellhousing to the engine. See Fig. 6.

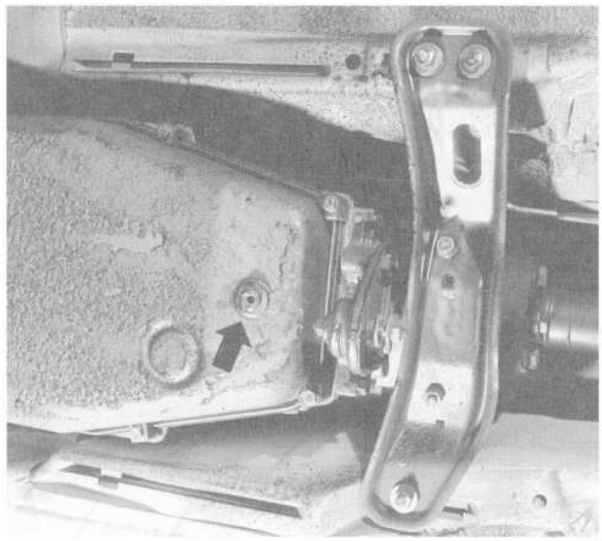

5022

Fig. 4. ATF sump drain plug on 4HP 22 transmission (**arrow**).

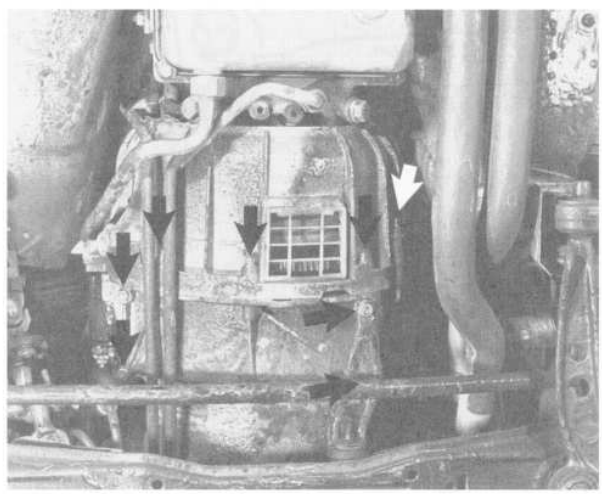

6044

Fig. 5. Bellhousing reinforcement plate mounting bolts (**arrows**).

12. While using a lever to make sure that torque converter stays firmly mounted to transmission, pull transmission from engine.

Installation is reverse of removal. To avoid damage when installing the transmission, rotate the torque converter back and forth to check that it has engaged its splines and be sure to correctly align the torque converter tabs to the drive plate indents. Use a new gasket on the ATF sump drain plug, and new O-rings on the ATF filler tube and cooler lines.

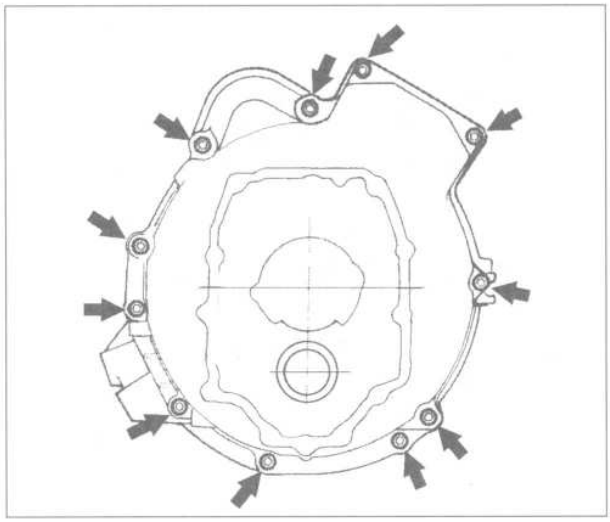

0011642

Fig. 6. Transmission to engine mounting bolts (**arrows**).

NOTE —

When installing the transmission to the engine, first turn the drive plate and torque converter until one of the three mounting bores is pointing straight down. Install BMW special tool 2 42 300 or a wooden dowel into the torque converter as an alignment guide. Remove the tool or dowel once the torque converter is seated on the drive plate. See Fig. 7.

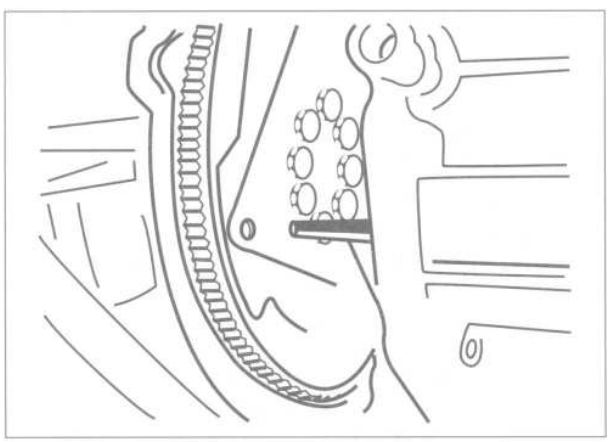

0011584

Fig. 7. Use BMW special tool no. 24 2 300 or wooden dowel for alignment of torque converter to drive plate.

Adjust the transmission selector lever linkage. See **250 Gearshift Linkage**. When reinstalling the driveshaft always replace the nuts securing the flexible coupling with new ones. Torque the nuts while holding the bolt stationary. Do not torque the bolt head as the coupling will be damaged. See **260 Driveshaft**.

Additional installation notes:

- Check driveplate for cracks or damage and replace if any faults are found. Use only new bolts when installing the driveplate.
- Be sure the two dowel sleeves in the engine block are not missing and firmly seated.
- When mating the torque converter to the drive plate, check that the tabs on the torque converter align with the indentations on the driveplate. Use alignment dowel BMW tool no. 24 2 300 if necessary.
- Check the torque converter installation once the transmission is installed. When correctly installed, the mounting surface of torque converter should be slightly below the edge of the transmission case.

CAUTION —

- *Before installing a new or rebuilt transmission, the ATF cooler and lines should be blown clean with compressed air and then thoroughly flushed twice with clean ATF. This will clean any dirt or friction lining particles that could clog the passages of the new transmission.*
- *Refill the transmission with ATF as described in* **ATF service**.
- *Do not reuse drained ATF.*

NOTE —

- *Torx bolts should be used with washers. Bolts without washers will increase the effort needed to remove them.*

Tightening Torques

- ATF cooler line coupling nuts . . . . . 21 Nm (15 ft-lb)
- ATF cooler line hollow bolt
  M14/M16. . . . . 38 Nm (28 ft-lb)
- ATF filler tube to ATF sump . . . . . 98 Nm (72 ft-lb)
  ATF sump drain plug
  M10 . . . . . 16 Nm (12 ft-lb)
- Driveplate to crankshaft . . . . . 105 Nm (77 ft-lb)
- Rear transmission support
  (to body) . . . . . 24 Nm (18 ft-lb)
- Torque converter to drive plate
  M8 . . . . . 26 Nm (19 ft-lb)
  M10 . . . . . 49 Nm (36 ft-lb)
- Transmission reinforcement
  plate . . . . . 24 Nm (18 ft-lb)
- Transmission to engine (Torx®-head)
  M8 . . . . . 21 Nm (15 ft-lb)
  M10 . . . . . 42 Nm (31 ft-lb)
  M12 . . . . . 63 Nm (46 ft-lb)

Automatic transmission–A4S 310R removing and installing

Removal of the transmission requires a transmission jack or a floor jack with transmission adaptor. Use extreme caution when working beneath the car and lowering the transmission. Torx® sockets will be needed to remove the bellhousing bolts.

1. Disconnect negative (-) and positive (+) battery cables from the battery, in that order.
2. Drain transmission by removing the ATF sump drain plug.
3. Remove complete exhaust system and the exhaust system heat shields. See **180 Exhaust System**.
4. Position selector lever in park.
5. Working at side of transmission, loosen cable clamping nut and disconnect selector lever cable from holder.

NOTE —
Counterhold clamping sleeve when loosening nut to prevent bending or distorting cable. See Fig. 8.

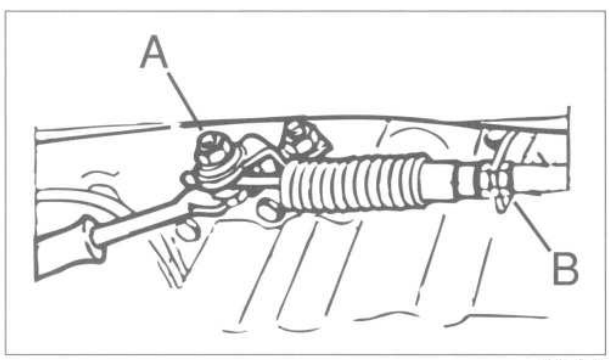

0011585

Fig. 8. Selector lever cable clamping nut (**A**). Counterhold clamping bolt when loosening nut. Also remove cable from bracket (**B**).

6. Support transmission from below using transmission jack. Unbolt transmission support crossmember from body. Unbolt U-shaped support member from body and transmission.

NOTE —
On models with two center mounts, only disconnect the front mount. See Fig. 9.

7. Disconnect driveshaft from transmission flange (unbolt flex disc from transmission flange).
8. Unbolt driveshaft center support from body. Suspend driveshaft using stiff wire.

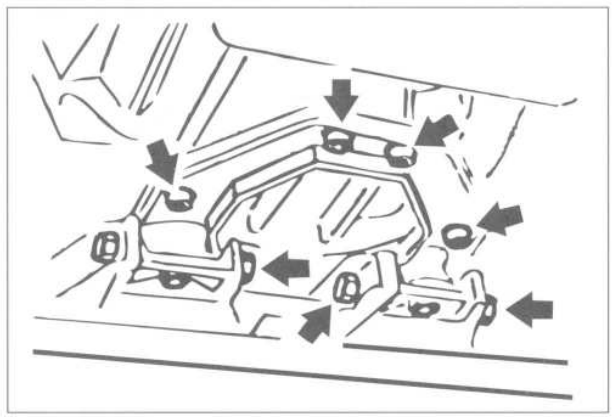

0011586

Fig. 9. Transmission support member mounting bolts (**arrows**).

9. Disconnect oil cooler pipe clamps from engine. Disconnect front and rear oil cooler pipes at transmission.
10. Disconnect main harness connector at transmission. Turn bayonet lock counterclockwise to disconnect. Disconnect speed sensor plug at transmission.
11. Remove access plug to reach torque converter mounting bolts.

NOTE —
The access plug for the torque converter bolts is located in one of two locations; either in the side cover below the exhaust manifold or in the lower part of the engine oil pan. See Fig. 10.

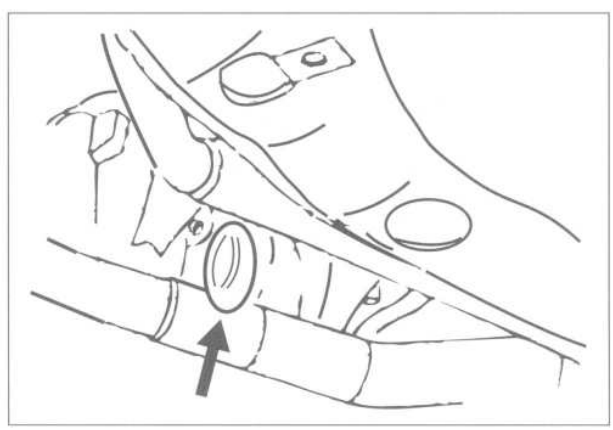

0011587

Fig. 10. Access plug in side cover plate (**arrow**). Access plug may be alternately located in lower section of oil pan.

12. Remove torque converter bolts from driveplate perimeter. Turn driveplate to access bolts.
13. Remove bolts from transmission bellhousing. See Fig. 11.

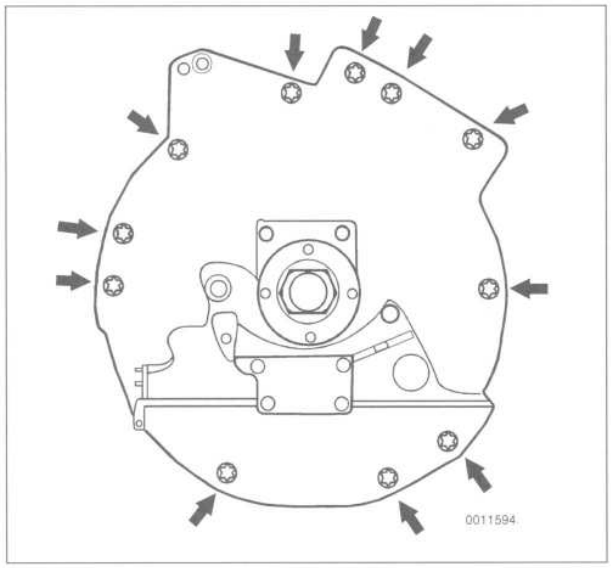

Fig. 11. Transmission to engine mounting bolts (**arrows**).

14. Using a lever to make sure that torque converter stays firmly mounted in transmission, remove transmission.

NOTE —

Before lowering transmission, wedge a block of hardwood between the engine oil pan and suspension crossmember pipe to prevent the engine from lowering.

Installation is reverse of removal. To avoid damage when installing the transmission, rotate the torque converter back and forth to check that it has engaged its splines and be sure to correctly align the torque converter to the drive plate. Use a new gasket on the ATF sump drain plug, and new O-rings on the ATF filler tube and cooler lines.

Adjust the transmission accelerator cable and selector lever linkage. When reinstalling the driveshaft always use new nuts at the flex disc. Torque the nuts while holding the bolt stationary. Do not torque the bolt head as the coupling will be destroyed. See **260 Driveshaft**.

Additional installation notes:

- Check condition of O-ring on front oil cooler pipe and replace if necessary.
- Check driveplate for cracks or damage and replace if any faults are found. Use only new bolts when installing the new driveplate.
- Check that the torque converter is correctly and fully seated before installing the transmission.
- When mating the transmission to the engine, check that the tabs on the torque converter align with the indentations on the driveplate. Use alignment dowel BMW tool no. 24 2 300 if necessary.

NOTE —

Torx bolts should always be used with washers. Bolts without washers may increase the effort needed to remove them.

CAUTION —

- *When installing a new or rebuilt transmission, the ATF cooler and lines must be blown clean with compressed air and then thoroughly flushed twice with clean ATF. This will clean out any dirt or friction lining particles that could clog the passages of the new transmission.*
- *Refill the transmission with ATF as described in* **ATF service**.
- *Do not reuse drained ATF.*

Tightening Torques–A4S 310R

- ATF cooler line coupling nuts . . . . . 18^{+3}_{-0} Nm (13^{+2}_{-0} ft-lb)
- ATF cooler line hollow bolt M16 . . . . . 35^{+3}_{-0} Nm (26^{+2}_{-0} ft-lb)
- ATF cooler line adaptor coupling M16 to M14 . . . . . 35^{+3}_{-0} Nm (26^{+2}_{-0} ft-lb)
- ATF filler tube to ATF sump . . . . . 98 Nm (72 ft-lb)
- ATF sump drain plug . . . . . 25 Nm (18 ft-lb)
- Rear transmission support (to body) . . . . . 22–24 Nm (16–17 ft-lb)
- Torque converter to drive plate
- M 8 . . . . . 25–27 Nm (18–20 ft-lb)
- M 10 . . . . . 47–51 Nm (35–38 ft-lb)
- Transmission to engine (hex-head)
- M 8 . . . . . 24 Nm (18 ft-lb)
- M 10 . . . . . 45 Nm (33 ft-lb)
- M 12 . . . . . 78–86 Nm (58–63 ft-lb)
- Transmission to engine (Torx®-head)
- M 8 . . . . . 21 Nm (15 ft-lb)
- M 12 . . . . . 72 Nm (53 ft-lb)
- Transmission reinforcement plate . . . . . 23 Nm (17 ft-lb)

Automatic transmission–A5S 310 Z, A5S 560 Z removing and installing

Using this procedure, the transmission unit is separated from the engine, supported on a floor jack, and taken out from below. Removal of the transmission requires a transmission jack or a floor jack with transmission adaptor. Use extreme caution when working beneath the car and lowering the transmission.

1. Disconnect negative (-) and positive (+) battery cables from battery, in that order.

2. Remove plastic cover from center top of engine. Remove both plastic covers from top of left and right cylinder head covers. See Fig. 12.

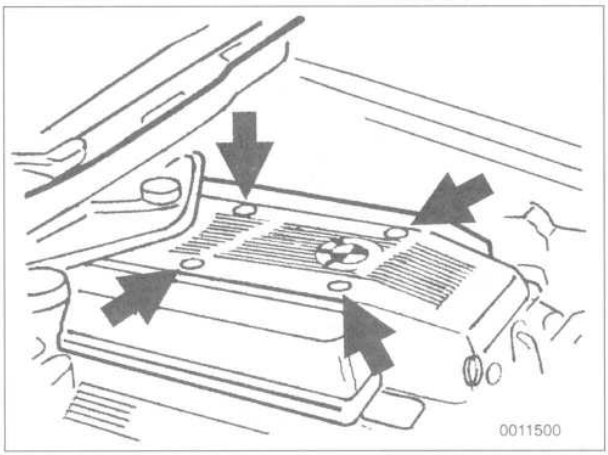

0011500

Fig. 12. Pry out caps to access nuts (**arrows**) on M60 engine covers.

3. Working beneath transmission, separate harness connectors from oxygen sensors. Then remove sensor harness bracket and set aside together with harness.

4. Remove complete exhaust system, exhaust system heat shields, and underbody protection. See **180 Exhaust System**.

5. Position selector lever in park. Loosen selector lever cable clamping nut on lever. Remove cable from bracket and slide cable out of selector lever. See Fig. 13.

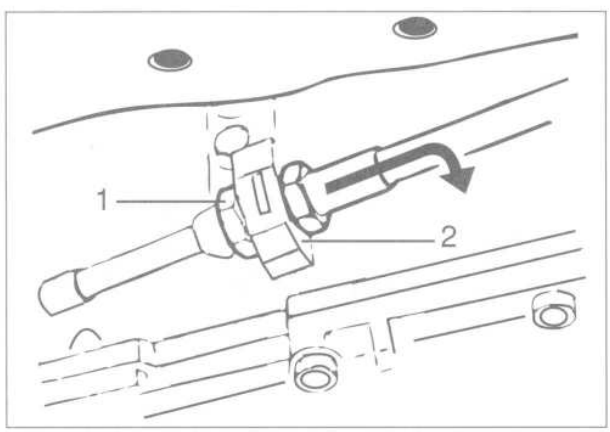

0011588

Fig. 13. Remove nut (**1**) from selector cable and slide cable out of bracket (**2**).

NOTE —

Counterhold selector cable clamping sleeve when loosening clamping nut. This will prevent bending or distorting cable.

6. Disconnect main harness connector at transmission. Turn connector counter-clockwise and pull straight off. Unclip harness. See Fig. 14.

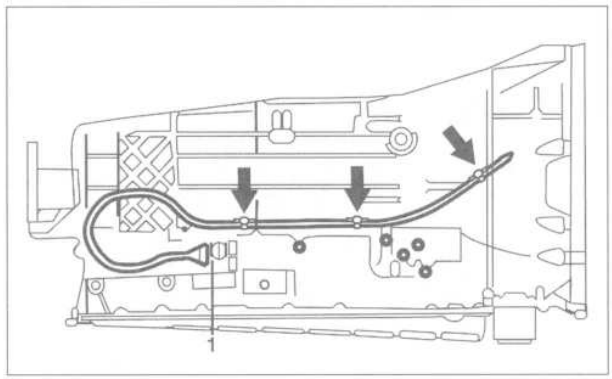

0011589

Fig. 14. Disconnect harness connector (**1**) and remove harness from clips (**arrows**).

7. Disconnect left and right coolant pipes from ATF oil cooler.

NOTE —

Approximately one quart of coolant will drain from the cooler when the lines are removed. Use a clean drain pail to catch the fluid.

8. Unbolt stabilizer bar U-brackets and lower stabilizer bar. See Fig. 15.

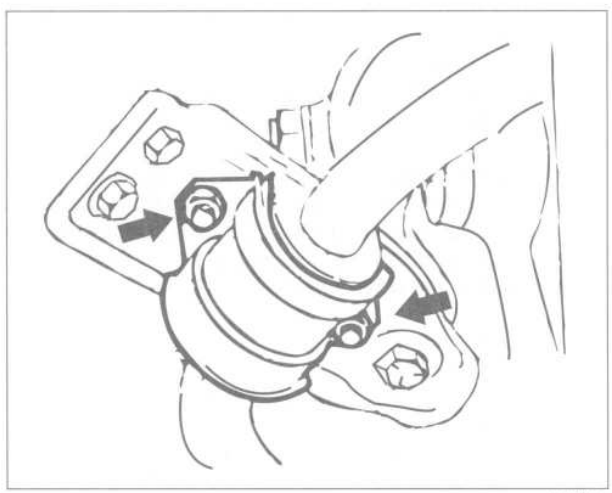

0011590

Fig. 15. Stabilizer bar mounting nuts (**arrows**). Disconnect both left and right brackets.

9. Support transmission from below using transmission jack. Unbolt transmission support crossmember from body. See Fig. 16.

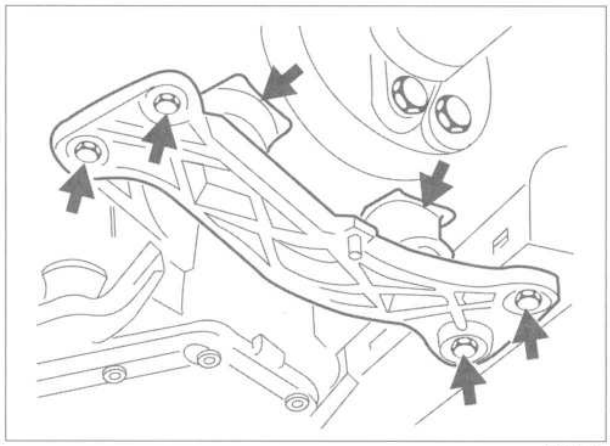

Fig. 16. Transmission center support mounting bolts (**arrows**).

10. Disconnect driveshaft from transmission. Unbolt driveshaft center support from body and suspend driveshaft using stiff wire.

NOTE —

- *When disconnecting the driveshaft, unbolt the flex disc from the transmission flange, and not the driveshaft from the flex disc.*
- *Discard driveshaft mounting nuts. They are single use self-locking nuts.*

11. Unbolt left and right heat shields from front lower sides of chassis. Slide heat shields forward as much as a possible.

12. Rotate steering wheel to left or right lock. Pry out cap from opening in oil sump to access torque converter mounting bolts. See Fig. 17.

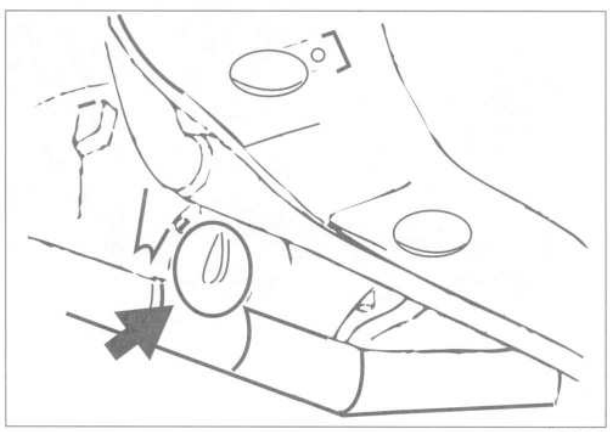

Fig. 17. Plug in oil sump (**arrow**) for accessing torque converter mounting bolts. Turn drive plate to access bolts.

13. Remove torque converter to drive plate mounting bolts (3) from the perimeter of driveplate. Turn driveplate to access bolts.

14. Remove the bolts from transmission bellhousing. See Fig. 18.

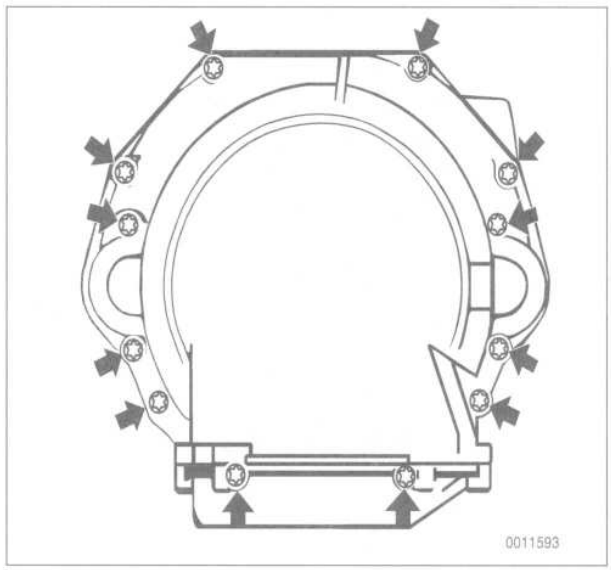

Fig. 18. Transmission to engine mounting bolts (**arrows**). Bolts at top are T10 size. All others are T12 size. Note that bolts at starter are fitted with nuts at front.

15. Using a lever to make sure that the torque converter stays firmly mounted to the transmission, pull the transmission off of the engine and lower out of car.

CAUTION —

- *Make sure the exhaust manifolds do not bear any weight when removing the transmission.*
- *Make sure the torque converter is secured in the transmission bellhousing during removal of the transmission.*

NOTE —

Before lowering transmission, wedge a block of hardwood between the engine oil pan and suspension crossmember pipe to hold the engine up.

Installation is reverse of removal. To avoid damage when installing the transmission, rotate the torque converter back and forth to check that it has engaged its splines and be sure to correctly align the torque converter tabs to the drive plate indents. Use a new gasket on the ATF sump drain plug, and new O-rings on the ATF filler tube and cooler lines.

NOTE —

When installing the transmission to the engine, first turn the drive plate and torque converter until one of the three mounting bores is pointing straight down. Install BMW special tool 2 42 300 or a wooden dowel into the torque converter as an installation alignment guide. Remove the tool or dowel through the opening in the oil pan once the transmission is seated. See Fig. 19.

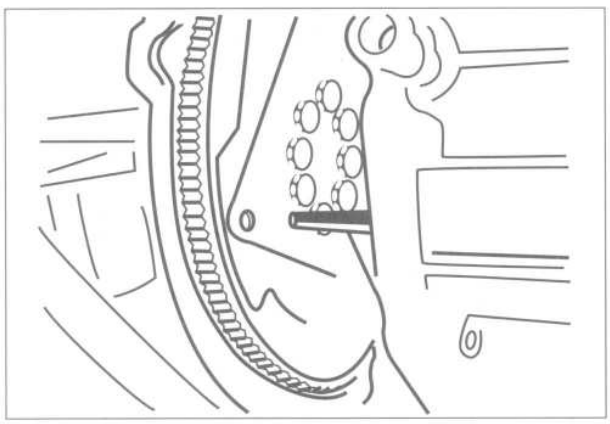

0011584

Fig. 19. Use BMW special tool no. 24 2 300 or wooden dowel for alignment of torque converter to drive plate.

Adjust transmission accelerator cable and selector lever linkage. When reinstalling the driveshaft always replace the nuts securing the flexible coupling with new ones. Torque the nuts while holding the bolt stationary. Do not torque the bolt head as the coupling will be destroyed. See **260 Driveshaft**.

Additional installation notes:

- Check condition of o-ring on oil cooler pipes and replace if necessary.
- Check driveplate for cracks or damage and replace if any faults are found. Use only new bolts when installing new driveplate.
- Check that torque converter is correctly and fully seated before installing transmission.
- When mating the transmission to the engine, check that the tabs on the torque converter align with the indentations on the driveplate. Use alignment dowel BMW tool no. 24 2 300 if necessary.

CAUTION —

- *When installing a new or rebuilt transmission, the ATF cooler and lines must be blown clean with compressed air and then thoroughly flushed twice with clean ATF. This will clean any dirt or friction lining particles that could clog the passages of the new transmission.*
- *Refill the transmission with ATF as described in* **ATF service**.
- *Do not reuse drained ATF.*

Tightening Torques–A5S 310Z/A5S 560Z

- ATF cooler line coupling nuts . . . . . 18^{+3}_{-0} Nm (13^{+2}_{-0} ft-lb)
- ATF cooler line hollow bolt M16 . . . . . 35^{+3}_{-0} Nm (26^{+2}_{-0} ft-lb)
- ATF cooler line adaptor coupling M16 to M14 . . . . . 35^{+3}_{-0} Nm (26^{+2}_{-0} ft-lb)
- ATF sump drain plug (M 10) . . . . . 50 Nm (37 ft-lb)
- Rear transmission support to body . . . 21 Nm (15 ft-lb)
- Torque converter to drive plate
  - M8 . . . . . 25–27 Nm (18–20 ft-lb)
  - M10 . . . . . 47–51 Nm (35–38 ft-lb)
- Transmission to engine (hex-head)
  - M8 . . . . . 24 Nm (18 ft-lb)
  - M10 . . . . . 45 Nm (33 ft-lb)
  - M12 . . . . . 78–86 Nm (58–63 ft-lb)
- Transmission to engine (Torx®-head)
  - M8 . . . . . 21 Nm (15 ft-lb)
  - M12 . . . . . 72 Nm (53 ft-lb)
- Transmission reinforcement plate . . . 23 Nm (17 ft-lb)

ATF service–4 HP 22/EH

1. Remove dipstick.
2. Remove drain plug and drain fluid into container. See Fig. 20.

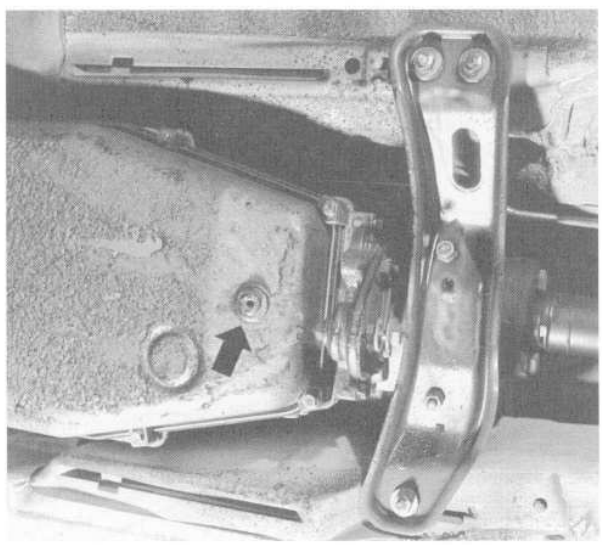

5022

Fig. 20. ATF drain plug on 4HP 22 transmission (**arrow**).

WARNING —

The ATF should be warm when draining. Do not drain the ATF if the engine is hot. Hot ATF can scald.

3. Disconnect oil filler pipe from oil sump. See Fig. 21.

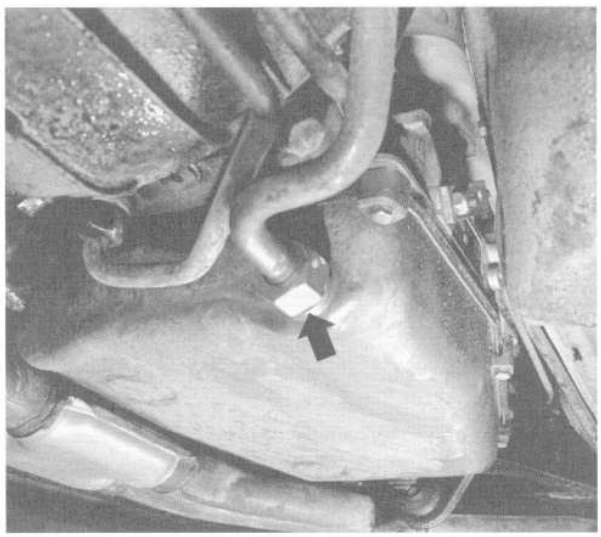

5023

Fig. 21. Oil filler pipe (**arrow**) on 4HP 22 transmission.

4. Remove oil sump mounting bolts and remove sump. See Fig. 22.

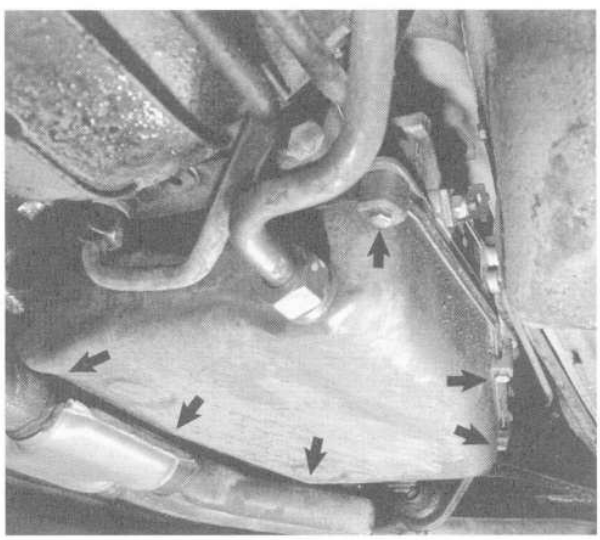

5024

Fig. 22. ATF sump mounting bolts and clamping brackets (**arrows**).

5. Remove strainer mounting screws and remove strainer. See Fig. 23.

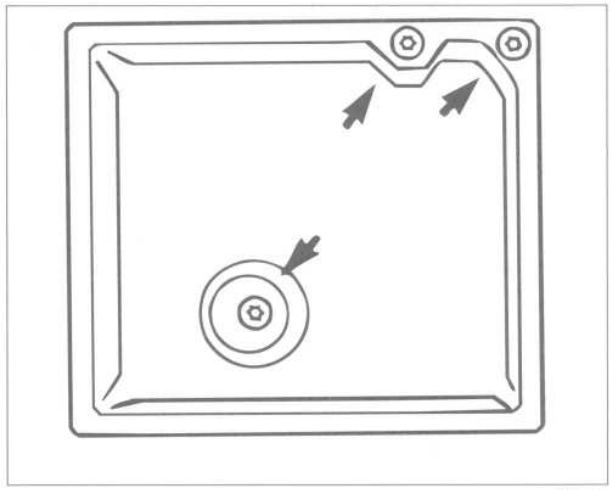

B419.A

Fig. 23. ATF fluid strainer and mounting bolts on 4HP 22 transmission.

NOTE —

Make sure the O-ring is attached to top of strainer when removing.

Installation is the reverse of removal. Always replace the drain plug seal and all gasket(s). Clean the sump and the sump magnets using a lint-free cloth. When mounting the sump, mount the curved sump clamping brackets at the front and rear corners of the sump. Mount the straight clamping brackets at the sump sides. The short legs on the clamps should contact the oil sump. Fill the transmission with the specified amount of fluid.

NOTE —

Check the ATF level with the car on level surface, engine running, and selector lever in park. The ATF level should be between the dipstick min. and max. marks when the ATF is at a temperature of approx. 80° C (175° F).

ATF specification

- Oil change volume
  Dexron II . . . . . 3.0 L (3.2 qt.)

Tightening Torques

- ATF drain plug to ATF sump. . . . . 16 Nm (12 ft-lb)
- ATF strainer to valve body . . . . . 8 Nm (71 in-lb)
- ATF sump to transmission . . . . . 6 Nm (53 in-lb)

ATF service–A4S 310R

A4S 310R transmissions may or may not be fitted with a dipstick. Early versions of the A4S 310R were equipped with a dipstick. On later models, the dipstick was eliminated.

On cars without an ATF level dipstick, it is recommended that ATF level checking be left to authorized BMW dealer with the appropriate temperature measuring equipment. The most accurate check of the ATF level is best done on a lift with the engine running in neutral and the ATF at a specific temperature.

> ***WARNING —***
> *The ATF should be warm when draining. Do not drain the ATF if the engine and/or transmission is hot. Hot ATF can scald.*

1. Remove dipstick, where applicable.
2. Remove drain plug and drain fluid into container. See Fig. 24.

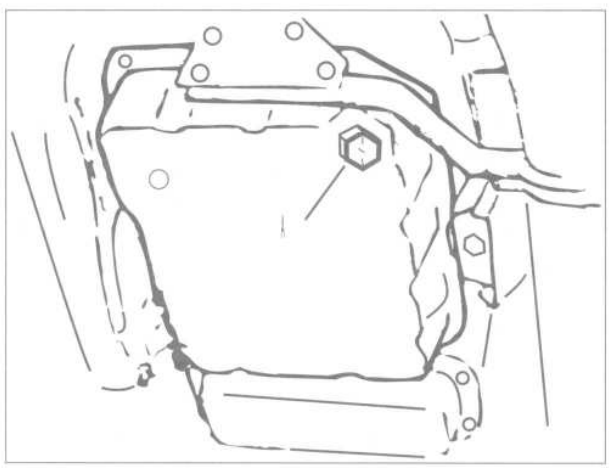

0011595

Fig. 24. ATF drain plug (**A**) on A4S 310R.

3. Remove rear (large) oil sump mounting bolts and remove sump and sump gasket.

> ***NOTE —***
> *The A4S 310R uses inch bolts, not metric bolts.*

4. Remove strainer mounting screws and remove strainer together with gasket. See Fig. 25.

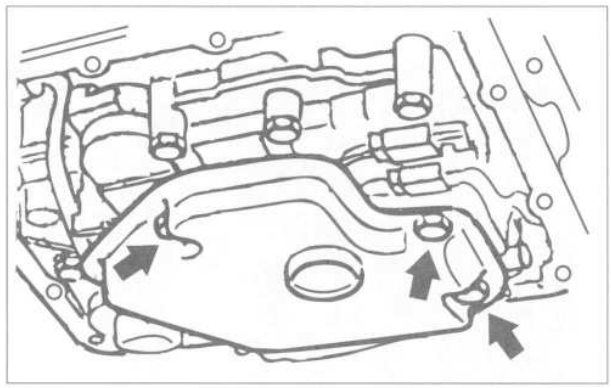

0011596

Fig. 25. ATF fluid strainer mounting bolts (**arrows**) on A4S 310R.

Installation is the reverse of removal. Always replace the drain plug seal and all gasket(s). Clean the sump and the sump magnet using a lint-free cloth. Use new bolts at the sump and tighten the bolts in-line, one after the other (i.e. do not tighten the bolts in a cross-wise pattern). Fill the transmission with the specified amount of fluid. See Fig. 26.

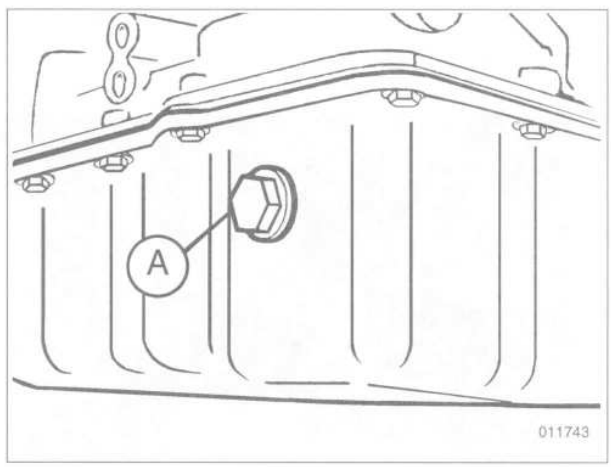

011743

Fig. 26. ATF fill plug (**A**) on A4S 310R.

> ***NOTE —***
> - *On cars with ATF level dipstick, check the ATF level using Fig. 27 and* ***Table e****. The fluid level should only be checked with car on level surface and unloaded.*
> - *On cars without ATF level dipstick, the car must be on level surface and unloaded, preferably on a lift. With the ATF at a temperature of 30-55°C (86-131°F), remove the ATF filler plug. Place the transmission in neutral and start the engine. With the ATF at the specified temperature, add ATF until it spills from the filler hole. Reinstall the filler plug.*

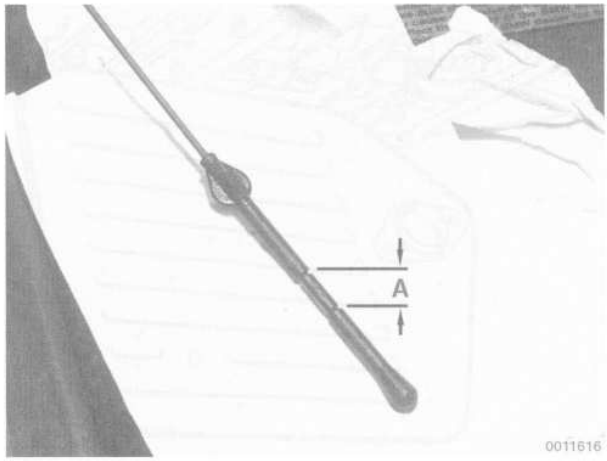

Fig. 27. ATF dipstick on A4S 310R transmission. Fluid level is indicated at **A**.

Tightening Torques

- ATF drain plug to ATF sump. . . . . 25 Nm (18 ft-lb)
- ATF strainer to valve body . . . . . 5 Nm (44 in-lb)
- ATF sump to transmission . . . . . 12 Nm (9 ft-lb)

ATF specification

- Oil change volume
  Dexron II . . . . . 3.0 L (3.2 qt.)

Table e. ATF Level vs. Temperature–A4S 310R

ATF temperature	Oil level at dipstick (A in Fig. 26)	
	Minimum	Maximum
20°C (68°F)	3 mm (0.12 in.)	15 mm (0.60 in.)
25°C (77°F)	5 mm (0.20 in.)	17mm (0.67 in.)
30°C (86°F)	8 mm (0.31 in.)	20 mm (0.78 in.)
35°C (95°F)	11 mm (0.43 in.)	22 mm (0.87 in.)
40°C (104°F)	13 mm (0.51 in.)	25 mm (0.98 in.)
45°C (113°F)	14 mm (0.55 in.)	26 mm (1.02 in.)
50°C (122°F)	16 mm (0.63 in.)	27 mm (1.06 in.)
55°C (131°F)	17 mm (0.67 in.)	28 mm (1.10 in.)
60°C (140°F)	19 mm (0.74 in.)	29 mm (1.14 in.)
65°C (149°F)	21 mm (0.83 in.)	32 mm (1.26 in.)
70°C (158°F)	22 mm (0.87 in.)	34 mm (1.34 in.)
75°C (167°F)	24 mm (0.94 in.)	36 mm (1.42 in.)
80°C (176°F)	26 mm (1.02 in.)	38 mm (1.50 in.)
85°C (185°F)	29 mm (1.14 in.)	41 mm (1.61 in.)
90°C (194°F)	31 mm (1.22 in.)	43 mm (1.69 in.)

ATF service–A5S 310Z

The A5S 310Z transmission is not fitted with an ATF level dipstick. Therefore, it is recommended that ATF level checking be left to authorized BMW dealer with the appropriate temperature measuring equipment. The most accurate check of the ATF level is best done on a lift with the engine running in neutral and the ATF at a specific temperature.

> ***WARNING —***
> *The ATF should be warm when draining. Do not drain the ATF if the engine and/or transmission is hot. Hot ATF can scald.*

1. Remove drain plug and drain fluid into container. See Fig. 28.

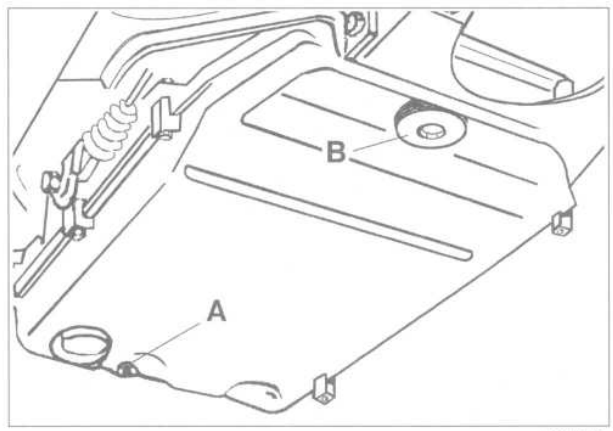

Fig. 28. Drain plug (**A**) and fill plug (**B**) on A5S 310Z transmission.

2. Remove oil sump mounting bolts and remove sump and sump gasket.

3. Remove strainer mounting screws and remove strainer.

> ***NOTE —***
> *Make sure the O-ring is attached to top of strainer when removing. See Fig. 28.*

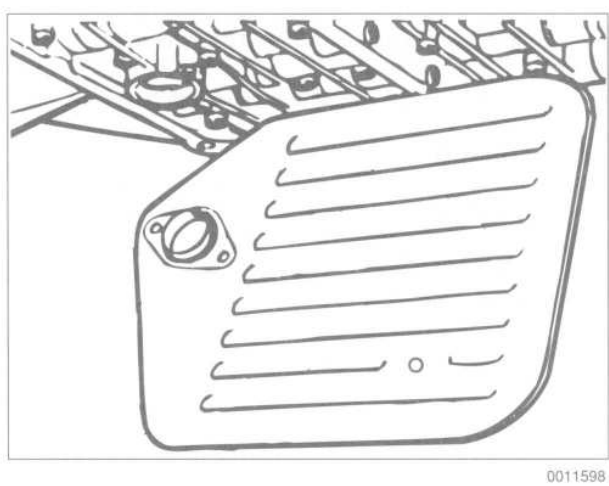

Fig. 29. ATF fluid strainer and O-ring on A5S 310Z transmission.

Installation is the reverse of removal. Always replace the drain plug seal and all gaskets and O-rings. Clean the sump and the sump magnets using a lint-free cloth. When mounting the sump, mount the curved sump clamping brackets at the front and rear corners of the sump. Mount the straight clamping brackets at the sump sides. The short legs on the clamps should contact the oil sump.

Fill the transmission with the specified amount of fluid using a suitable pump. The fluid level is correct when it begins to spill from the fill hole when the ATF temperature is at 30-55°C (86-131°F).

NOTE —
For the most accurate check of the ATF level, the car must be on level surface and unloaded, preferably on a lift. With the ATF at a temperature between 30-55°C (86-131°F), remove the ATF filler plug. Place the transmission in neutral and start the engine. Add ATF until it spills from the filler hole. Reinstall the filler plug.

Tightening Torques
- ATF drain plug to ATF sump. . . . . 16 Nm (12 ft-lb)
- ATF strainer to valve body . . . . . 5 Nm (44 in-lb)
- ATF sump to transmission . . . . . 6 Nm (4 ft-lb)

ATF Specification
- Oil change volume
  Dexron II . . . . . 3.0 L (3.2 qt.)

ATF service–A5S 560Z

CAUTION —
The A5S 560Z uses a semi-synthetic ATF, only available from an authorized BMW dealer. Dexron must not be used in the A5S 560 Z transmission.

1. Remove drain plug and drain fluid into container.

WARNING —
The ATF should be warm when draining. Do not drain the ATF if the engine is hot. Hot ATF can scald.

2. Remove oil sump mounting bolts and remove sump and sump gasket.
3. Remove strainer mounting screws and remove strainer.

NOTE —
Make sure the O-ring is attached to top of strainer when removing. See Fig. 30.

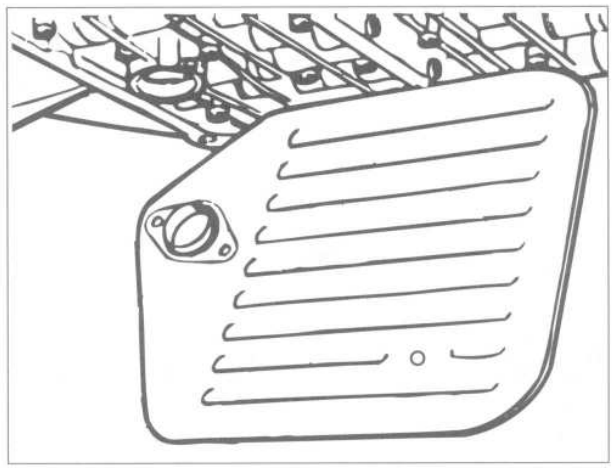

0011598

Fig. 30. ATF fluid strainer and O-ring on A5S 560Z transmission.

Installation is the reverse of removal. Always replace the drain plug seal and all gaskets and O-rings. Clean the sump, the expansion tank, and the sump magnets using a lint-free cloth. To remove the expansion tank, lift it straight off the sump.

The fluid level is correct when it begins to spill from the fill hole when the ATF temperature is between 30-50°C (86-122°F).

NOTE —
For the most accurate check of the ATF level, the car must be on level surface and unloaded, preferably on a lift. With the ATF at a temperature between 30-50°C (86-122°F), remove the ATF filler plug. Place the transmission in neutral and start the engine. Add ATF until it spills from the filler hole. Reinstall the filler plug.

Tightening Torques
- ATF drain plug to ATF sump . . . . . 50 Nm (37 ft-lb)
- ATF strainer to valve body . . . . . 5 Nm (44 in-lb)
- ATF sump to transmission . . . . . 10 Nm (7 ft-lb)

ATF specification
- Oil change volume
  BMW semi-synthetic fluid
  (Shell LA 2634) . . . . . 5.5 L (5.8 qt.)

CAUTION —
The A5S 560Z uses a special ATF, available from BMW. Dexron must not be used in the A5S 560Z transmission.

Automatic Transmission Seal Replacement

All of the external seals on automatic transmission can be replaced without extensive disassembly. It will however be necessary to remove the transmission to replace the torque converter seal. See **Transmission, Removing and Installing**. It will also be necessary to disconnect the driveshaft from the transmission to replace the output shaft seal. See **260 Driveshaft**.

NOTE —

- *To pinpoint the location of leaks, have the undercarriage and transmission degreased. Remember that air turbulence from driving can cause fluids to appear to be leaking from other locations.*
- *A clogged or inoperative transmission vent can cause fluid leaks at other seals in the transmission. If in doubt, replace the vent valve located on the extension housing.*

Torque Converter Seal

ATF leaking from the torque converter seal will usually be seen at the bottom of the bellhousing.

A leaking torque converter seal is often caused by a worn bushing in the torque converter hub. The bushing should always be checked when the seal is replaced. A worn bushing will promote rapid wear of the new seal.

Fig. 31 shows the bearing surface that should be checked. Remove sharp edges and burrs with fine emery cloth. If the hub is deeply scored, the torque converter should be replaced.

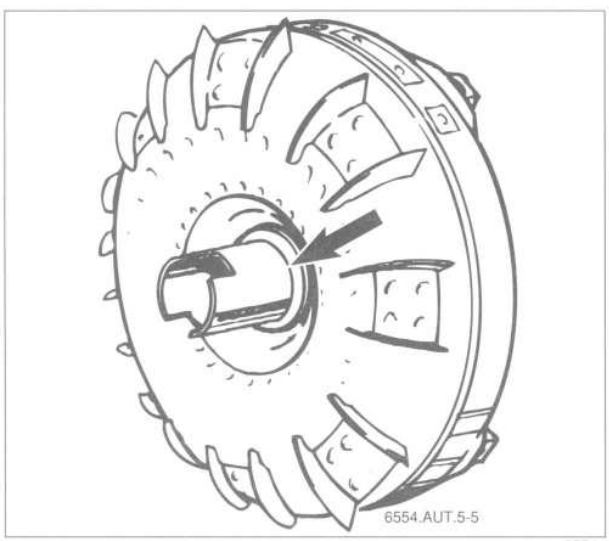

6554

Fig. 31. Torque converter removed from engine showing bearing surface (**arrow**) that should be checked for scoring or wear.

To replace the seal, pull the converter off of its mounting on the transmission. To facilitate removal, install two long bolts halfway into the converter mounting holes and pull evenly on both of the bolts. Using a hooked seal tool or screwdriver, pry the old seal out of the transmission case. Lubricate the new seal with ATF and drive it into position.

CAUTION —
Be careful not to mar the surface of the housing when removing the seal.

Output Shaft Seal

The output shaft seal can be replaced without removing the transmission from the car, but a thin-walled 30 mm deep-well socket will be needed to remove the output flange collar nut. Also, installation of the collar nut requires a new lockplate, and application of a sealant to prevent transmission fluid leakage. BMW specifies Curil® K2 or Loctite® 572, which should be available from your BMW dealer.

To replace the output shaft seal, bend back the locking tab on the lockplate, shown in Fig. 32. Hold the output flange stationary and remove the collar nut, then use a puller to pull off the flange. To hold the output flange stationary put the shift lever in park. Pry the old seal out of the transmission, lubricate the new seal with ATF, and drive it into place.

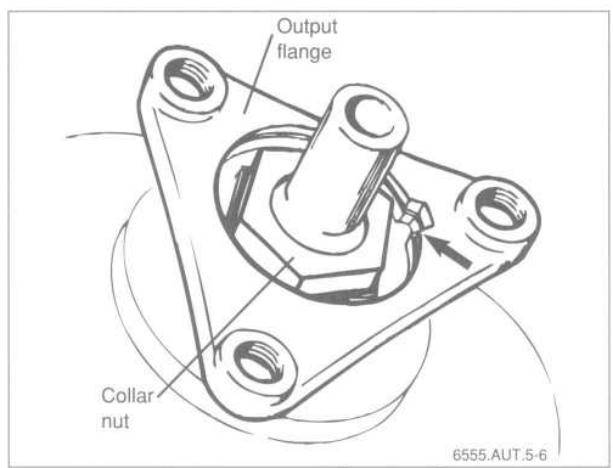

Fig. 32. Locking tab for output flange collar nut (**arrow**). Bend tab out of groove to remove nut.

When installing the collar nut, lightly coat the side that presses against the output flange with the sealer and torque the nut. Install the new lockplate and bend the tab into the slot.

Tightening Torques

- Output flange collar nut
  4HP 22/EH, A4S 310R . . . . . 100 Nm (74 ft-lb)
  A5S 310Z, A5S 560Z1. . . . . 120 Nm (89 ft-lb)

When reinstalling the drive shaft always replace the nuts securing the flexible coupling with new ones. Torque the nuts while holding the bolt stationary. Never torque the bolt head as the coupling will be destroyed. See **260 Driveshaft** for more information.

> ***CAUTION —***
> *Be careful not to mar the surface of the housing when removing the seal.*

Manual Valve Seal

The manual valve seal can be seen at the side of the transmission case and on the side of the ATF sump.

To replace the manual valve seal, remove the manual valve lever from the transmission, shown in Fig. 33. Pry out the old seal using a small screwdriver or hooked tool. Lubricate the new seal with ATF, and drive it into place. When installing the manual lever, torque the nut.

Tightening Torque

- Manual lever to selector . . . 8 to 10 Nm (71 to 89 in-lb)

If the linkage was not disconnected from the manual valve lever, it should not be necessary to adjust the shift linkage.

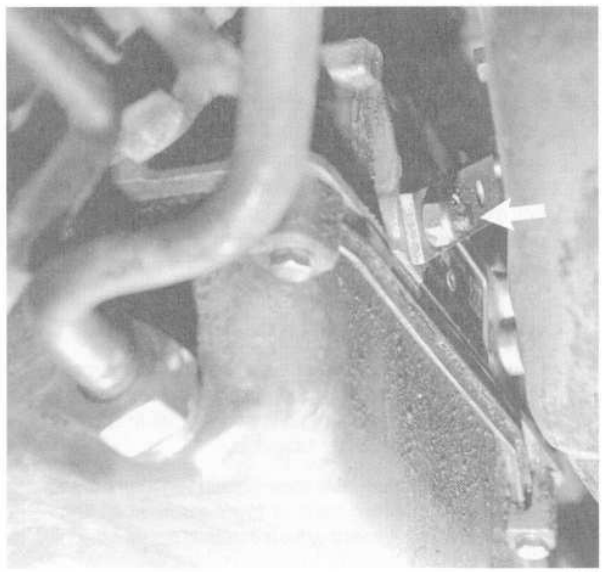

6287

Fig. 33. Manual valve lever and nut (**arrow**) on transmission to be removed for replacement of seal.

> ***CAUTION —***
> *Be careful not to mar the surface of the housing when removing the seal.*

250 Gearshift Linkage

GENERAL 250-1

GEARSHIFT SERVICE 250-1
Gearshift lever, removing and installing 250-2

SELECTOR LEVER SERVICE 250-3
Shift mechanism, adjusting 250-3
Gear position/neutral safety switch, replacing 250-3
Automatic Shiftlock, checking function 250-6
Shift interlock, checking function 250-6

GENERAL

This repair group covers basic gearshift and linkage service for manual and automatic transmission models. Special service tools are required for some of the procedures given here.

GEARSHIFT SERVICE

Removal of most gearshift components requires that the exhaust system and driveshaft first be removed for access to the complete assembly. An exploded view of the gearshift mechanism is shown in Fig. 1.

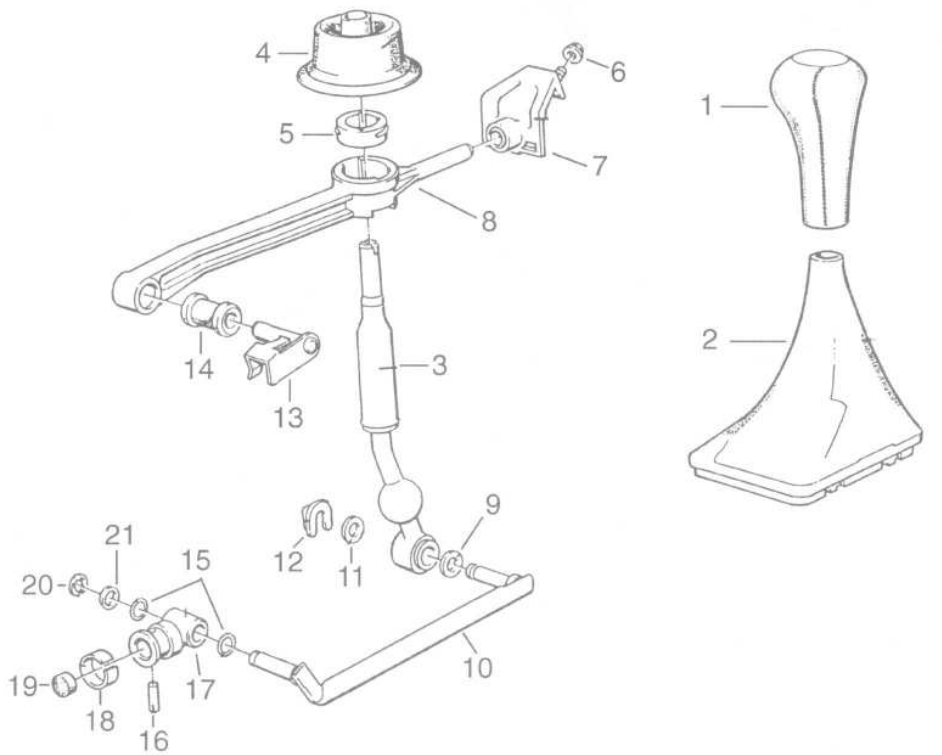

1. Shift knob lever
   - Pull straight up to remove (will require about 90 lbs. of force to remove)
2. Shift boot cover
3. Shift lever
4. Dust boot
5. Shift lever retaining ring
6. Nut
7. Bearing bracket
   - Lubricate bearing surface
   - Attach bracket to retainer lugs when installing
8. Shift console
9. Washer
10. Shift rod
11. Washer
12. Retaining clip
13. Locking pivot pin
    - Lubricate bearing surfaces
14. Bearing sleeve
15. Spacers
    - Install spacer with chamfer (stepped side) facing away from shift rod adapter
16. Cylindrical pin
17. Shift rod adapter
    - Install with offset towards left as viewed from rear of transmission
    - Lubricate bearing points
18. Spring sleeve
19. Spacer (felt or foam)
20. Circlip
21. Washer

0011625

Fig. 1. Exploded view of gearshift mechanism on cars with manual transmission.

Gearshift lever, removing and installing

1. Pull shift knob up and off of the shift lever.

NOTE —
Removal of the shift knob will require a force of about 90 lbs.

2. Unclip shift boot cover from retainers at front and remove cover together with shift boot. See Fig. 2.

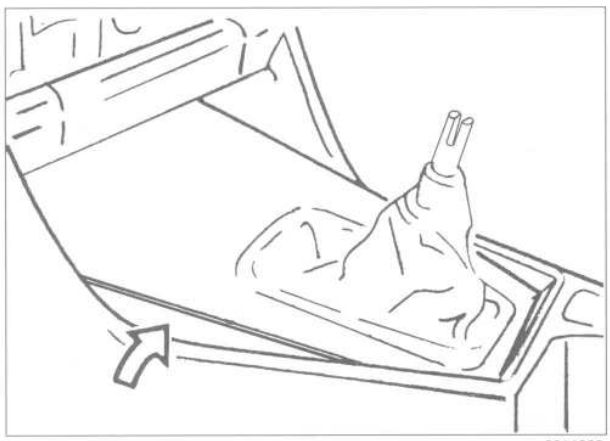

Fig. 2. Remove shift boot cover by prying up at rear (**arrow**) and then lifting off from front retainers.

3. Remove insulation padding and unclip dust boot from body and shift console. Pull dust boot from shift lever.

4. Working underneath car, remove retaining clip and washer from shift rod. Pull shift rod out of shift lever. See Fig. 3.

5. Working underneath car, release bearing retaining ring by turning 90° (1/4 turn) counterclockwise. See Fig. 4.

6. Working from inside passenger compartment, disengage retaining ring and lift shift lever out from above.

Installation is the reverse of removal. Check the condition of all rubber and plastic bushings and washers. Replace circlips and any worn parts. Remove old grease from shift lever bearing and lubricate with molybdenum disulfide grease.

Align the tabs on the plastic retaining ring with the openings in the shift console. See Fig. 5.

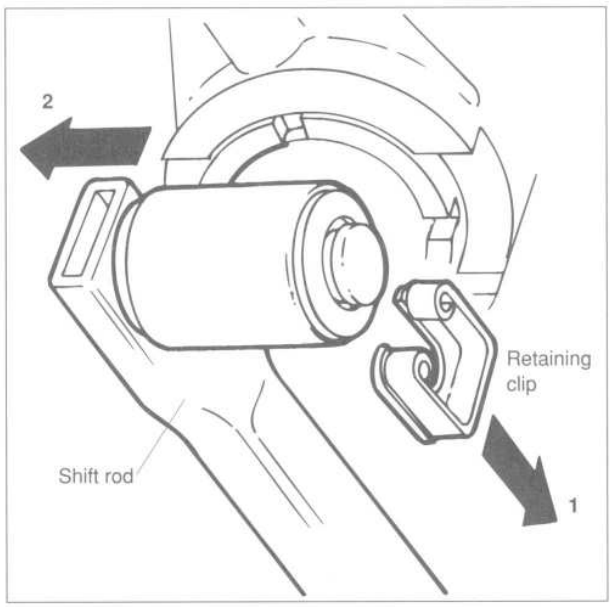

Fig. 3. Pull off circlip in direction of arrow (**1**) and then disengage shift rod from bushing (**2**).

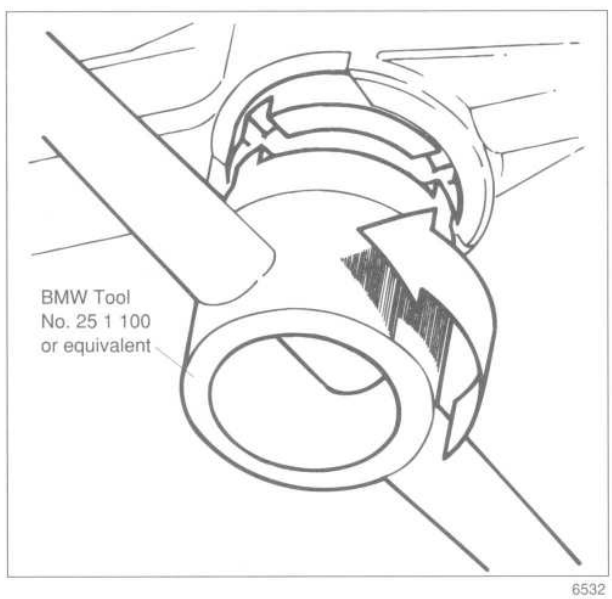

Fig. 4. Shift lever retaining ring being removed using BMW special tool 25 1 100.

NOTE —
When mounting the shift lever retaining ring, make sure the locking tabs are aligned with the openings in the shift console. Push the shift lever and retaining ring in until the locking tabs click into position.

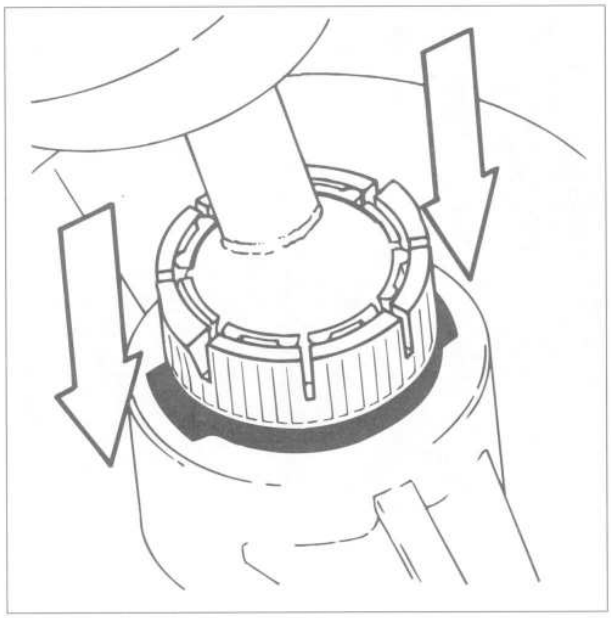

6533

Fig. 5. Shift lever being installed.

SELECTOR LEVER SERVICE

An exploded view of the shift mechanism used on cars with automatic transmission is shown ahead in Fig. 12. This view can be used for most service to the mechanism, including selector lever cable replacement.

Shift mechanism, adjusting

1. Position selector lever in park (P).
2. Working at left-hand side of transmission, loosen operating cable clamping nut. See Fig. 6.

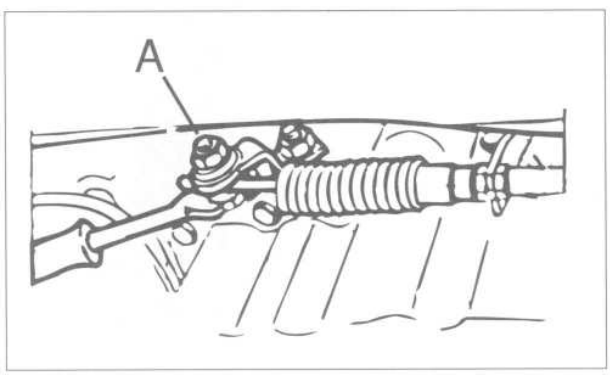

Fig. 6. Selector lever cable clamping nut (**A**). Counterhold clamping bolt when loosening nut.

NOTE —
Hold cable clamping sleeve stationary when loosening nut to prevent bending or damaging cable.

3. Push the manual valve lever forward toward the engine (Park position) while applying light pressure on the cable end.
4. Tighten the cable clamping nut.

Tightening torque
- Shift cable clamping nut . . . . . 10–12 Nm (7.5–9 ft-lb)

Gear position/neutral safety switch, replacing

NOTE —
A faulty gear position/neutral safety switch may cause transmission shifting problems and erratic transmission operation

1. Pry out transmission program switch from center console cover and disconnect electrical connection.
2. Remove hex-head screw (3 mm) from shift lever handle and remove handle.
3. Remove cover from shift lever console. See Fig. 7.
4. Disconnect harness connector from gear position/neutral safety switch and remove mounting screws. See Fig. 8.
5. Remove gear position/neutral safety switch by aligning drive slot with drive pin on lever. See Fig. 9.

Installation is the reverse of removal, noting the following. Before installing the switch, align the drive slot in the switch housing with switch in the slide. See Fig. 10. Install the switch so that the drive gate on the switch aligns the drive pin on the lever. When installing the shift lever handle, engage the pin on the release button to the hole in the pull rod. See Fig. 11.

Tightening Torques
- Console to body . . . . . 7 Nm (62 in-lb)
- Gear position/neutral safety switch to shift console . . . . . 4.5 Nm (40 in-lb)



Fig. 7. Console cover shown removed. Pry cover up from front and then lift off rear retaining clips.

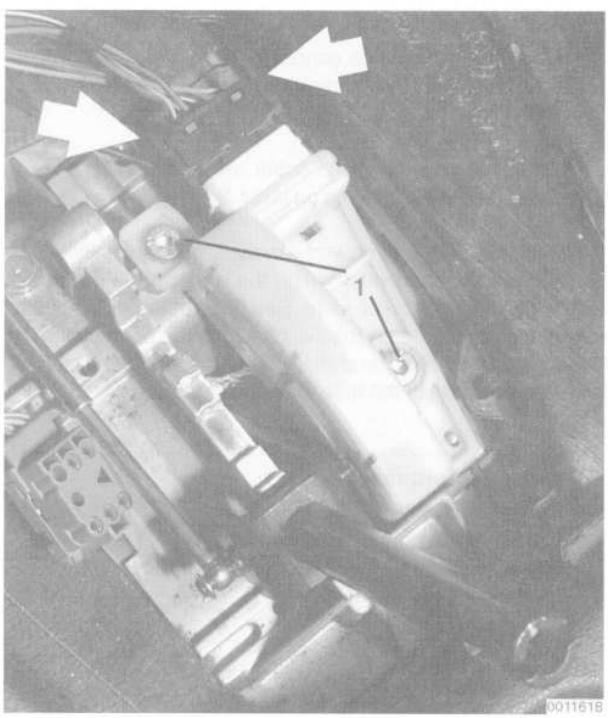

Fig. 8. Disconnect harness connector by pressing connector retaining clips together (**arrows**). Switch mounting screws shown at **1**.

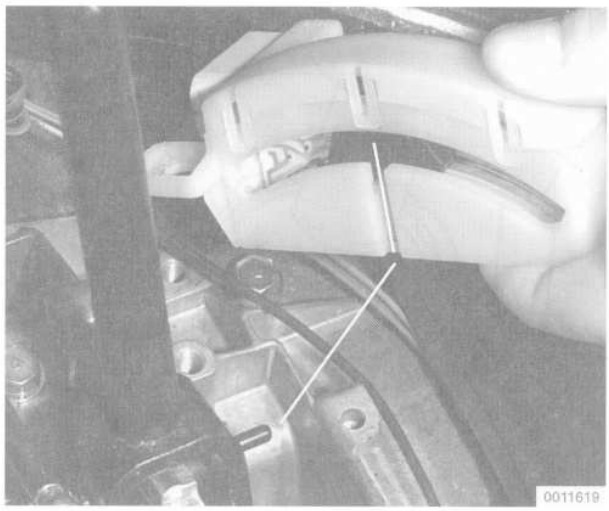

Fig. 9. Align drive gate on switch to pin on lever.

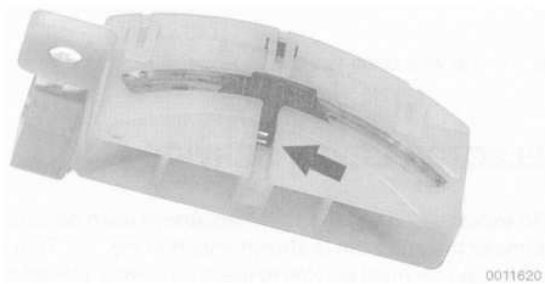

Fig. 10. Align contact in slide with slot in switch housing (**arrow**) before installing gear position/neutral safety switch.

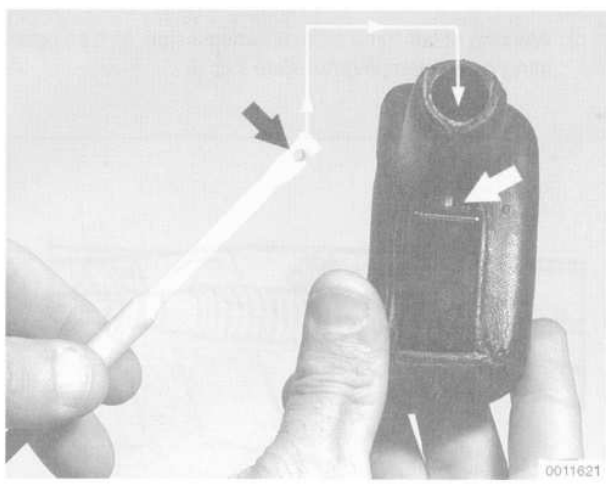

Fig. 11. Engage release button pin to hole in pull rod.

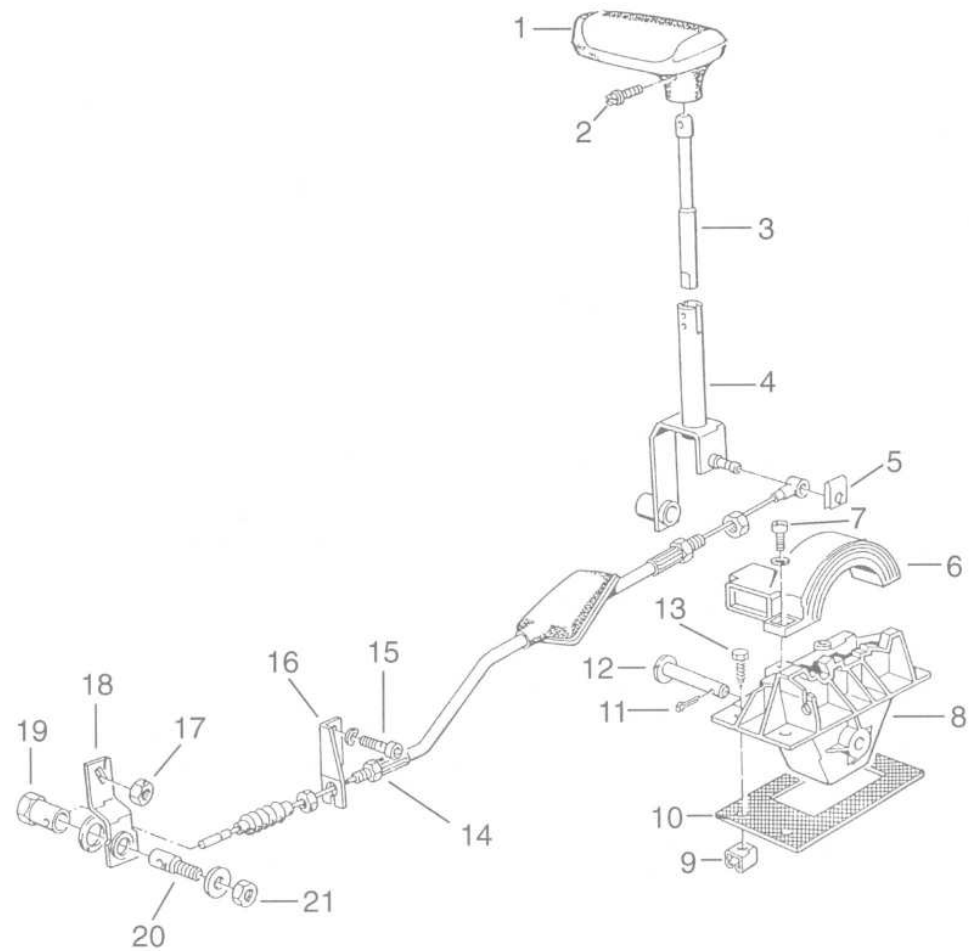

1. Shift handle
2. Setscrew
3. Pull rod
4. Selector lever shaft
5. Retaining clip
6. Gear position/ neutral safety switch
7. Screw
   • tighten to 4.5 Nm (40 in-lb)
8. Console
9. Nut
10. Gasket
11. Cotter pin
12. Selector lever shaft
13. Screw
    • tighten to 7 Nm (62 in-lb)
14. Cable
15. Screw
16. Bracket
17. Nut
18. Manual valve lever
19. Clamping sleeve
20. Clamping bolt
21. Nut
    • tighten to 10 Nm (89 in-lb)

6530

Fig. 12. Exploded view of shift mechanism on cars with automatic transmission.

Automatic shiftlock, checking function

1992 and later cars are equipped with automatic shiftlock. The shiftlock feature uses an electric solenoid to lock the selector lever in P or N. Depressing the foot brake with the ignition on energizes the solenoid, allowing lever to be moved into a drive gear. The solenoid is energized only when the engine speed is below 2,500 rpm and the vehicle speed is below 3 mph. The solenoid is mounted in the right-hand side of the selector lever housing.

1. With engine running and car stopped, place selector lever in P or N.
2. Without depressing brake pedal, check that selector lever is locked in position (P or N).
3. Depress brake pedal firmly.
4. Check that the selector lever can now be moved out of P or N. The solenoid should be heard to energize.
5. With the selector lever in P or N and the brake pedal depressed, raise the engine above 2,500 rpm.
6. Check that the selector lever cannot be moved out of P or N.
7. If any faults are found check the electrical operation of the shiftlock solenoid and check for wiring faults to or from the transmission control module (TCM).

NOTE —

The solenoid is controlled via the TCM, using brake pedal position, engine speed, and road speed inputs.

Shift interlock, checking function

1993 and later cars are equipped with shift interlock. The shift interlock uses a bowden-type cable between the ignition switch and the shift lever. The cable mechanically locks the shift lever in the park position when the key is in the off position or removed from the ignition lock. This feature also prevents the key from being removed from the ignition lock until the selector lever is in P.

1. Shift selector lever to park (P) position and turn ignition key OFF.
2. Remove ignition key. Check that selector lever cannot be shifted out of (P) position.

NOTE —

- *It must only be possible to remove ignition key with selector lever in (P) position.*
- *Shift interlock cable must not be kinked.*

3. Turn ignition key on and depress brake pedal. Check that selector lever can be moved freely from gear to gear.
4. With the selector lever in a gear position other than P, attempt to move the key to the off position. The key should not go into the off position.

If any faults are found check the cable and the cable attachment points for damage or faults.

260 Driveshaft

GENERAL 260-1

TROUBLESHOOTING 260-2
Driveshaft Noise and Vibration 260-2

DRIVESHAFT SERVICE 260-4
Driveshaft, aligning 260-4
Driveshaft, removing and installing 260-4
Flex disc, replacing 260-7
Center bearing, replacing 260-7
Front centering guide, replacing 260-8
Driveshaft constant velocity (CV) joint, replacing 260-9

TABLES
a. Driveshaft Troubleshooting 260-3

GENERAL

Fig. 1 shows the driveshaft and final drive. The two-piece driveshaft is joined in the center by a sliding splined coupling. This coupling compensates for slight front-and-back movement of the engine and transmission. The front of the driveshaft is connected to the transmission by either a flexible rubber coupling (flex-disc) or a universal joint drive.

The rear of the driveshaft is connected to the final drive through a constant velocity joint. The driveshaft is supported in the center by a center bearing. The bearing is rubber mounted to isolate vibration.

NOTE —

For information the rear axle (final drive) and rear drive axles, see **331 Final Drive**.

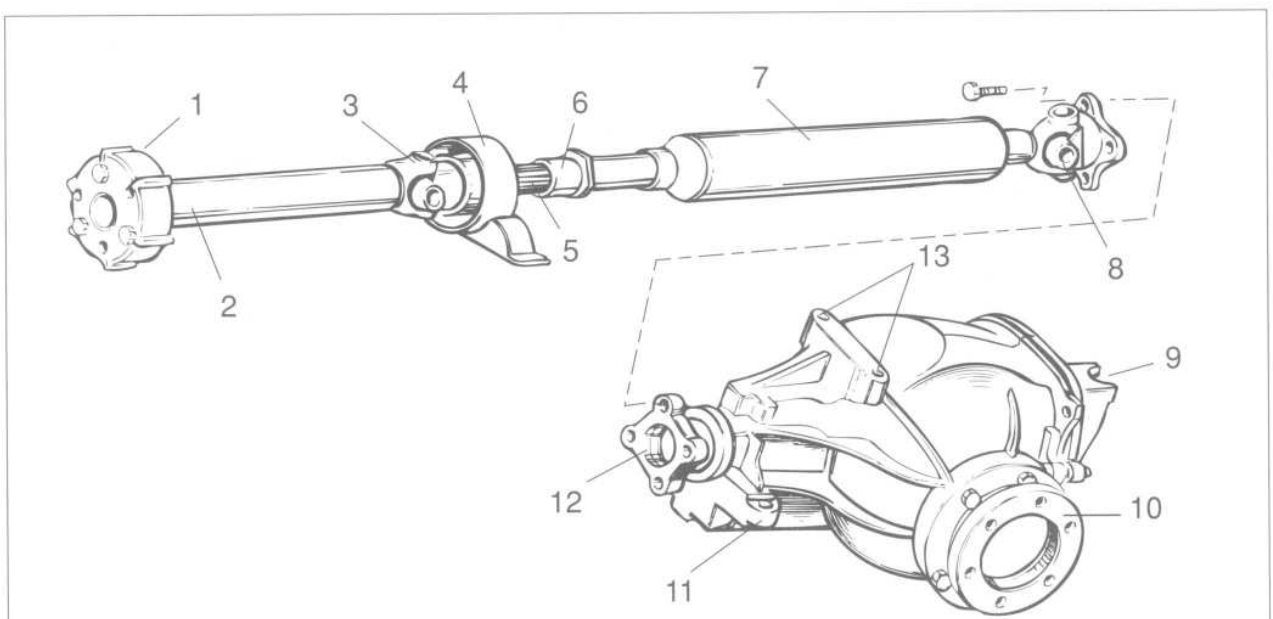

1. Flex-disc
2. Front section of driveshaft
3. Universal joint
4. Center bearing
5. Splined shaft
6. Clamping sleeve
7. Rear section of driveshaft
8. Universal joint
9. Rear mounting point
10. Output flange
11. Side mounting point
12. Input shaft flange
13. Upper mounting points

0011622

Fig. 1. Driveshaft and final drive assembly.

TROUBLESHOOTING

The source of driveline vibrations and noise can be difficult to pinpoint. Engine, transmission, rear axle, or wheel vibrations can be transmitted through the driveshaft to the car body. Noises from the rear of the car may be caused by final drive problems, or by faulty wheel bearings or drive axles. Also check that the tires are correctly inflated and are not excessively worn.

Smooth operation of the driveshaft and final drive depends on the condition of the rubber isolation components and center bearing, the lubricant level and type in the final drive, and properly tightened fasteners. Any symptom of vibration or noise may be caused by worn or damaged components.

Drive the car at the speed where the problem occurs, then shift to different gear ranges to see if the problem changes with road-speed or engine-speed. Road-speed dependent problems usually indicate trouble in the driveline.

Aside from inspecting for worn or broken parts, troubleshooting should also consider the installed angles of the driveshaft. Also check the splined coupling for free movement.

Driveshaft Noise and Vibration

When troubleshooting driveshaft problems, begin with a close visual inspection. Check the driveshaft for broken or missing balance weights. The weights are welded to the driveshaft. Check the torque of the fasteners at the flange connections, check the rubber of the flex-disc and center bearing for deterioration or tearing, and check for preload at the center bearing. See **Driveshaft center bearing, replacing** for preload specifications.

Check the universal joints for play. With the driveshaft installed, pull and twist the driveshaft while watching the joint. The BMW specification for play is very small, so almost any noticeable play could indicate a problem.

Further inspection requires removal of the driveshaft. Check the front centering guide for correct installation as described in **Driveshaft centering guide, replacing**. Also check runout at the transmission output flange and output shaft, and at the final drive input flange. Check the bolt hole bores in the flange for wear.

Driveshaft flange runout (max. allowable)

- Transmission output flange
  - axial play . . . . . 0.10 mm (0.004 in.)
  - radial play . . . . . 0.07 mm (0.003 in.)
- Final drive input flange
  - radial play (measured at driveshaft centering lip) . . . . . 0.07 mm (0.003 in.)

Check for smooth operation of the center bearing. There should be slight resistance, but no binding or grittiness. Check that the splines of the sliding coupling are properly lubricated and free from corrosion. Clean and lubricate the splines with molybdenum disulfide grease (Molykote Longterm 2® or equivalent). Check that the coupling slides smoothly after the sleeve has been tightened to its final torque. Replace the clamping bushing if necessary.

Check that the universal joints move freely without binding. If any joint is difficult to move or binds, the driveshaft section should be replaced.

NOTE —

With the driveshaft installed, the actual amount that the universal joints pivot is limited. For the most accurate test, check universal joints only in their normal range of movement.

If inspection reveals nothing wrong with the driveshaft, it may need to be rebalanced. This can be done by any repair shop with the right equipment. Also, check the alignment of the driveshaft as described below.

NOTE —

Minor driveshaft vibrations can often be corrected simply by disconnecting the driveshaft at the final drive, and repositioning the driveshaft 90°, 180° or 270° in relation to the final drive input flange.

Table a lists symptoms of driveshaft problems and their probable causes. Most of the repair information is contained within this repair group. The bold type refers to repair information contained outside of this repair group.

Table a. Driveshaft Troubleshooting

Symptom	Probable cause	Corrective action
1. Vibration when moving off (forward or reverse)	a. Incorrect preload of center bearing	a. Check preload of center bearing. Readjust if necessary.
	b. Center bearing rubber deteriorated or torn.	b. Inspect center bearing. Replace if necessary.
	c. Flex-disc damaged or worn	c. Inspect flex-disc. Replace if necessary.
	d. Engine or transmission mounts faulty	d. Inspect engine and transmission mounts. Align or replace, if necessary
	e. Front centering guide worn, or driveshaft mounting flanges out of round	e. Check front centering guide and replace if necessary. Check runout of driveshaft flanges.
	f. Universal joints worn or seized	f. Check universal joint play and movement. Replace driveshaft if necessary.
	g. Sliding coupling seized	g. Remove driveshaft and check movement of sliding coupling. Clean coupling splines and replace parts as necessary.
	h. Driveshaft misaligned	h. Check driveshaft alignment.
2. Vibration at 25 to 30 mph (40 to 50 km/h)	a. Front centering guide worn, or driveshaft mounting flanges out of round or damaged	a. Check front centering guide and replace if necessary. Check runout of driveshaft flanges.
	b. Universal joints worn or seized	b. Check universal joint play and movement. Replace driveshaft if necessary.
	c. Flex-disc damaged or worn	c. Inspect flex-disc. Replace if necessary.
	d. Center bearing rubber deteriorated or torn	d. Inspect center bearing. Replace if necessary.
	e. Sliding coupling seized	e. Remove driveshaft and check movement of sliding coupling. Clean coupling splines and replace parts as necessary.
	f. Driveshaft misaligned	f. Check driveshaft alignment.
3. Vibration, audible rumble over 35 mph (60 km/h)	a. Front centering guide worn, or driveshaft mounting flanges out of round or damaged	a. Check front centering guide and replace if necessary. Check runout of driveshaft mounting flanges.
	b. Mounting flange bolts loose or holes worn	b. Remove driveshaft and check transmission output flange and final drive input flange. Replace if necessary.
	c. Driveshaft unbalanced	c. Check driveshaft for loose or missing balance plates. Have driveshaft rebalanced or replace if necessary.
	d. Universal joints worn or seized	d. Check universal joint play and movement. Replace driveshaft if necessary.
	e. Sliding coupling seized	e. Remove driveshaft and check movement of sliding coupling. Clean coupling splines or replace parts as necessary.
	f. Incorrect preload of center bearing	f. Check preload of center bearing. Readjust if necessary.
	g. Center bearing faulty	g. Replace center bearing.
	h. Final drive rubber mount faulty	h. Inspect final drive rubber mount and replace if necessary.
	i. Driveshaft misaligned	i. Check driveshaft alignment.
4. Noise during on/off throttle or when engaging clutch	a. Final drive components worn or damaged (excessive pinion-to-ring-gear clearance)	a. Remove final drive and repair.
	b. Drive axle or CV joint faulty	b. Inspect drive axles and CV joints. Repair or replace as necessary. See **331 Final Drive**
	c. Sliding coupling seized	c. Remove driveshaft and check movement of sliding coupling. Clean coupling splines and replace parts as necessary.

DRIVESHAFT SERVICE

Most components of the driveshaft are easily replaced once the driveshaft is removed from the car. Worn or damaged universal joints usually require replacement of that section of the driveshaft.

The front of the driveshaft is aligned with the transmission by a centering guide. The guide is recessed into the front of the driveshaft. It engages the end of the transmission output shaft when the driveshaft is installed.

The driveshaft is balanced to close tolerances. Whenever it is to be removed or disassembled, the mounting flanges and driveshaft sections should be marked with paint or a punch before proceeding with work. This will ensure that the driveshaft can be reassembled or installed in exactly the same orientation.

Universal joint play

- Maximum allowable . . . . . 0.15 mm (0.006 in.)

Driveshaft, aligning

The alignment of the driveshaft does not normally need to be checked unless the engine/transmission or the final drive have been removed and installed. If, however, all other parts of the driveshaft have been inspected and found to be okay, but there is still noise or vibration, driveshaft alignment should be checked.

There are two important driveshaft alignment checks. The first is to make sure that the driveshaft runs straight from the transmission to the final drive, without any variation from side-to-side caused by misalignment of the engine/transmission in its mounts. Make a basic check by sighting along the driveshaft from back to front. Any misalignment should be apparent from the center bearing forward. To adjust the side-to-side alignment, loosen the transmission or engine mounts to reposition them, then retighten the mounts. The driveshaft is centered when it is positioned as shown. See Fig. 2.

The second important driveshaft alignment check is more complicated. It checks the amount the driveshaft is angled vertically at the joints. This angle is known as driveshaft deflection.

In general, there should be little deflection in the driveshaft between the engine, the center bearing, and the final drive. Precise checks require the use of a large protractor or some other means of measuring the angle of the engine and the final drive and comparing these angles to the angle of the driveshaft sections.

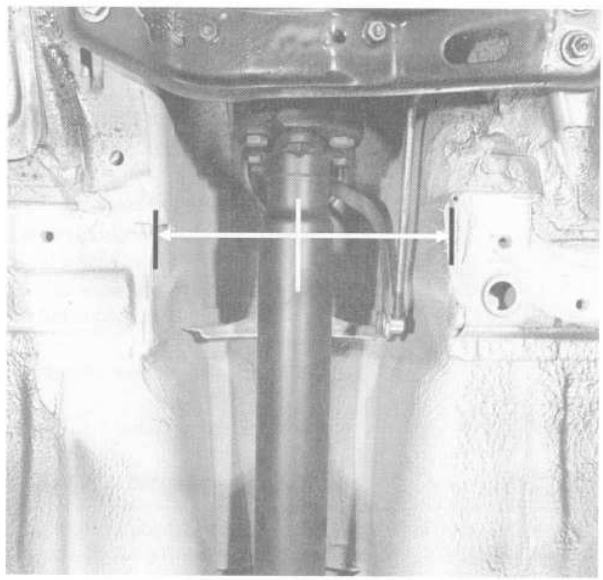

5326

Fig. 2. Driveshaft side-to-side alignment. Driveshaft should be centered in driveshaft tunnel.

To change the deflection angle, shims can be placed between the center bearing and the body or between the transmission and its rear support. When using shims to change a deflection angle, keep in mind that the angle of adjacent joints will also change. Deflection angles should be as small as possible.

> ***CAUTION —***
> *The maximum allowable change in height of the center bearing or transmission support using shims is 3 mm (0.12 in.).*

Driveshaft, removing and installing

> ***WARNING —***
> - *Removal of the driveshaft will disconnect the transmission from the final drive. Do not rely on engagement of the transmission to prevent the car from rolling. Chock all wheels. Use caution when working beneath the car and lowering the driveshaft. Firmly set the parking brake.*
> - *The driveshaft is mounted to the transmission and final drive with self-locking nuts. These nuts are designed to be used only once and should be replaced.*

1. Remove exhaust system and heat shield. See **180 Exhaust System**.
2. Loosen driveshaft sliding coupling clamping sleeve several turns.

NOTE —

BMW special tool 26 1 040 can be used to loosen the clamping sleeve.

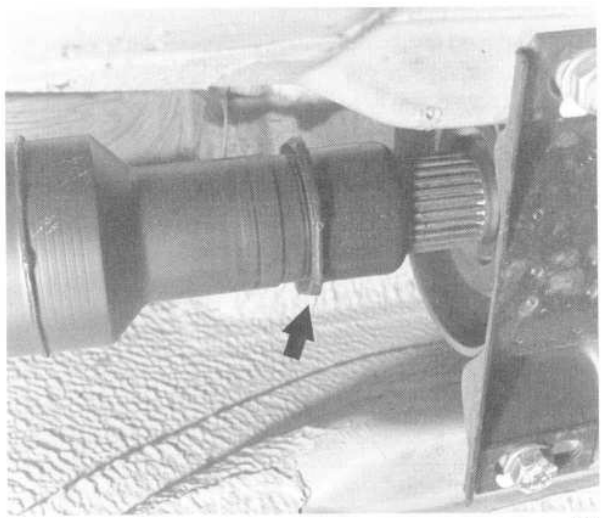

5338

Fig. 3. Clamping sleeve at driveshaft center (**arrow**).

3. Using paint or a punch, make matching marks on driveshaft and attaching flanges.

4. Remove nuts and bolts holding flex-disc or universal joint to transmission flange. See Fig. 4. Do not pull driveshaft off flange at this time.

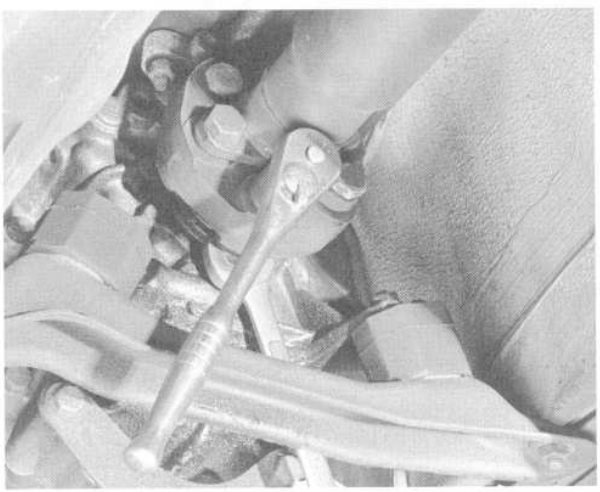

5267

Fig. 4. Front driveshaft to transmission mounting bolt being removed. Note open-end wrench used to counterhold bolt.

NOTE —

Removal of the bolts may be made easier by placing a large hose clamp around the flex-disc and tightening the clamp slightly to compress the coupling.

5. Remove bolts from driveshaft at final drive flange. See Fig. 5.



5330

Fig. 5. Rear driveshaft to final drive mounting nut being removed.

6. Support driveshaft and remove center bearing mounting bolts.

> ***WARNING —***
> *Do not let the rear section rest on the fuel tank connection line.*

7. Remove driveshaft.
   - Bend driveshaft down at center bearing, and then pull it off at front. If necessary, slide driveshaft together at splined coupling.

NOTE —

- *Do not pull driveshaft sections apart.*
- *On models with a vibration damper, the damper can be removed from the transmission flange by turning it about 60° and pulling it over the flange. See Fig. 6.*

If the splined coupling is to be cleaned or if the rubber bushing behind the clamping sleeve is being replaced, mark the two sections of the driveshaft before separating. Lubricate the splines with molybdenum disulfide grease (Molykote Longterm 2® or equivalent) before reassembly. Inspect the flange bolt mounting holes and replace any worn components.

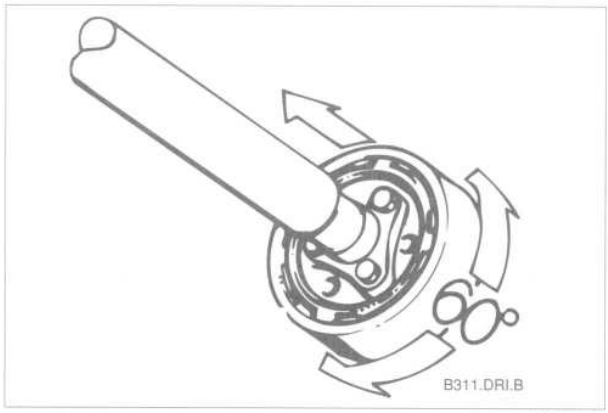

B311.dri.b

Fig. 6. To remove vibration damper, turn damper about 60° and pull off flange.

NOTE —

If the two sections are pulled apart without the driveshaft being marked, reassemble the two halves so that the universal joints are on the same plane as shown in Fig. 7. There is still the possibility of the driveshaft being reassembled wrong by 180° and causing vibration. In this case remove the driveshaft and turn one section 180°, and reassemble.

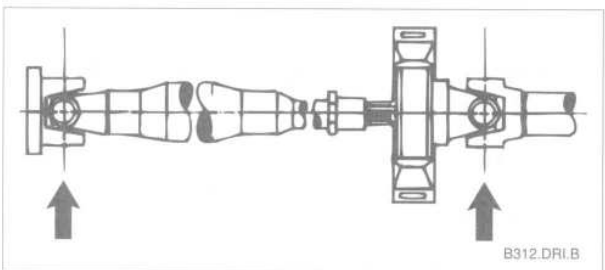

B312.dri.b

Fig. 7. Assemble driveshaft with U-joints on same plane.

Installation is the reverse of removal. Lightly lubricate the centering guide in the flex-disc with molybdenum disulfide grease (Molykote Longterm 2® or equivalent)

Reinstall the driveshaft by first positioning it against the final drive flange and then sliding it onto the transmission flange. Align any marks made during removal. Position the center bearing up against the body and loosely install the mount bolts. Use new self-locking nuts. Torque the driveshaft nuts while holding the bolts. Preload the bearing mount toward front of car, then tighten the mounting bolts. See Fig. 8. The remainder of installation is the reverse of removal.

Center bearing mount

- Preload
  (towards front of car) . . . . . 4 to 6 mm (5/32 to 1/4 in.)

Tightening Torques

- Driveshaft center mount to body. . . . . 21 Nm (16 ft-lb)
- Driveshaft clamping sleeve. . . . . 10 Nm (89 in-lb)
- Driveshaft to final drive flange (with CV joint)
  - M8 ribbed nut . . . . . 43 Nm (32 ft-lb)
  - M8 compression nut . . . . . 32 Nm (23 ft-lb)
  - M10 ribbed nut . . . . . 70 Nm (52 ft-lb)
  - M10 compression nut . . . . . 64 Nm (47 ft-lb)
- Driveshaft to final drive flange (with U-joint)
  - M10 ribbed nut . . . . . 80 Nm (59 ft-lb)
  - M10 compression nut . . . . . 64 Nm (47 ft-lb)
- Driveshaft to transmission or final drive flange
  - M10/8.8 grade . . . . . 46 Nm (34 ft-lb)
  - M10/10.9 grade . . . . . 72 Nm (53 ft-lb)
  - M12 . . . . . 123 Nm (90 ft-lb)
- Rear transmission bracket to transmission/body
  - M8 . . . . . 23 Nm (17 ft-lb)
  - M10 . . . . . 45 Nm (33 ft-lb)

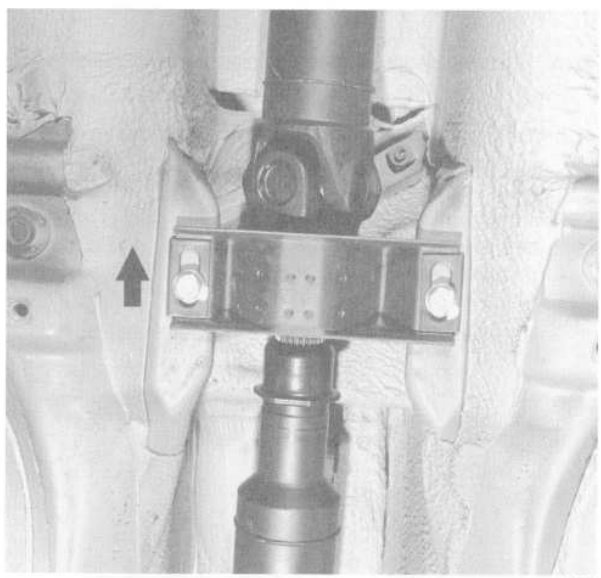

5331

Fig. 8. Preload center bearing toward front 4–6 mm (**arrow**).

WARNING —

- *Do not reuse self-locking nuts. These nuts are designed to be used only once.*
- *Avoid stressing the flex-disc when torquing the bolts. Do this by holding the bolts steady and turning the nuts on the flange side.*

NOTE —

Bolt grade is marked on the bolt head. When replacing bolts, only use bolts of the same strength and hardness as the originals installed.

Flex-disc, replacing

The flex-disc at the front of the driveshaft should be checked for cracks, tears, missing pieces, or distortion. Check for worn bolt hole bores in the flange. When replacing the flex-disc, use new self-locking nuts.

1. Remove driveshaft. See **Driveshaft, removing and installing**.

NOTE —

It is possible to only partially remove the driveshaft, leaving it connected to the final drive. The driveshaft can be tilted down in the center and slid off the transmission flange once the center bearing bracket is unbolted from the body. Use care when using this method. Suspend the driveshaft using stiff wire in as close to the installed position as possible. If the driveshaft hangs unsupported, the rear universal joint may be damaged.

2. Unbolt flex-disc from driveshaft.

NOTE —

Removal and installation of the bolts may be made easier by placing a large hose clamp around the flex-disc, and tightening the clamp slightly to compress the coupling.

3. Install new flex-disc using new self-locking nuts. Molded arrows on coupling should face flange arms. See Fig. 9.

NOTE —

Torque only the nuts while holding the bolt heads. This will prevent damaging or fatiguing the rubber.

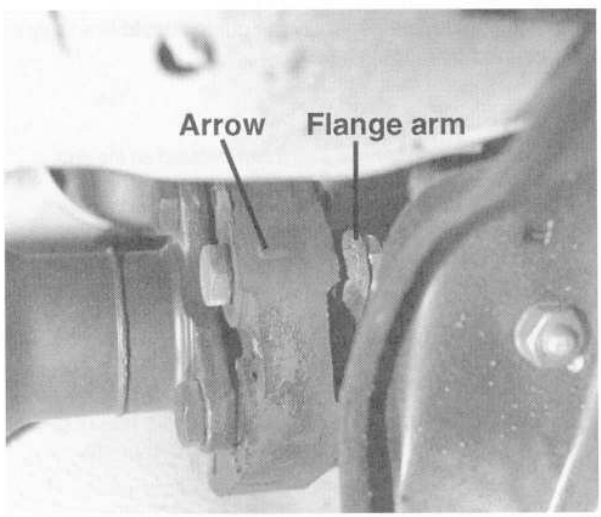

Fig. 9. Install flex-disc with arrows on disc facing flange arms.

Tightening Torques

- Flex-disc to driveshaft or transmission flange
  - M10 8.8 grade . . . . . 46 Nm (34 ft-lb)
  - M10 10.9 grade . . . . . 72 Nm (53 ft-lb)
  - M12 . . . . . 123 Nm (90 ft-lb)

WARNING —

Do not reuse self-locking nuts. These nuts are designed to be used only once and should be replaced whenever they are removed.

NOTE —

- *Remove and discard the hose clamp if one was used during installation or if the flex-disc came supplied with one.*
- *The bolt grade is marked on the bolt head. When replacing bolts, only use bolts of the same strength and hardness as the originals installed.*

4. Reinstall the driveshaft.

Center bearing, replacing

The center bearing consists of a grooved ball bearing assembly press-fit in a rubber mount. To replace the bearing, driveshaft must be removed from car. The bearing assembly is pressed onto the front section of the driveshaft and secured by a circlip or a bolt. See Fig. 10.

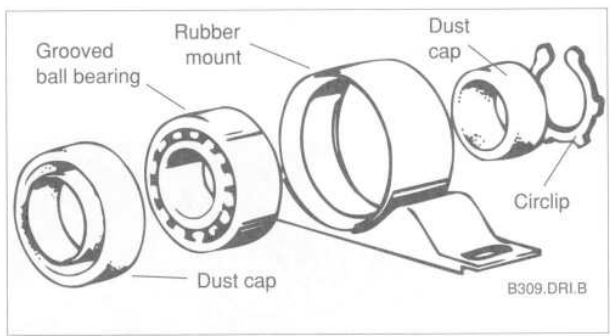

Fig. 10. Exploded view of center bearing components. Model with circlip shown.

To replace the center bearing, the driveshaft must be removed from the car.

1. Remove driveshaft. See **Driveshaft, removing and installing**.

2. Make matching marks on front and rear driveshaft sections. See Fig. 11.



5333

Fig. 11. Before pulling apart driveshaft sections, make matching marks as shown.

3. Unscrew clamping sleeve fully and pull driveshaft sections apart. Remove rubber bushing, washer, and clamping sleeve from front section.

4. Inspect condition of rubber bushing for splined coupling. Replace worn or damaged parts.

5. Remove center bearing circlip and dust guard, if applicable. See Fig. 12. Remove bearing from driveshaft using puller.

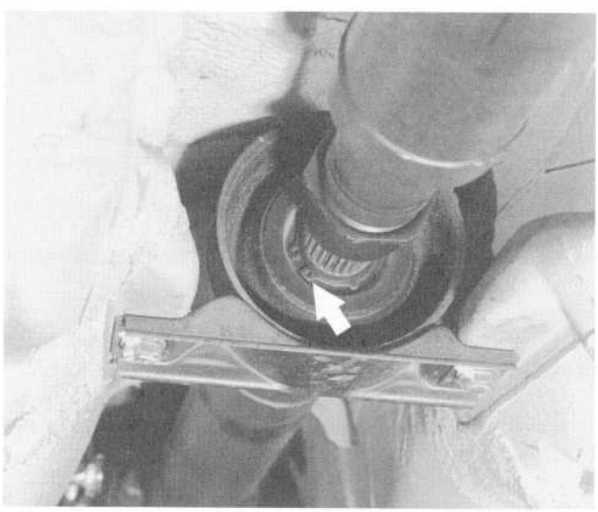

5334

Fig. 12. Center bearing circlip (**arrow**) to be removed. Driveshaft shown installed.

NOTE —

Install puller so that it pulls on inner hub of bearing. Pulling on outer ring of mount may tear rubber, and entire bearing assembly will need to be replaced.

6. Press old bearing out of mount and press in new bearing.

7. Make sure dust guard is on driveshaft, and then press center mount onto driveshaft flush with dust guard.

8. Place clamping sleeve, washer, and rubber bushing on front driveshaft section. Lubricate splines with molybdenum disulfide grease (Molykote Longterm 2® or equivalent) and then reassemble driveshaft. Make sure matching marks align. Do not retighten clamping sleeve until driveshaft is installed.

9. Reinstall driveshaft.

10. Tighten clamping sleeve.

Tightening Torque

- Clamping sleeve . . . . . 10 Nm (7.5 ft-lb)

Front centering guide, replacing

The front centering guide centers the driveshaft in relation to the transmission. The guide is press-fit into a cavity in the front of the driveshaft and slides onto the transmission output shaft.

A worn centering guide can cause driveshaft wobble and vibration. It is necessary to remove the driveshaft to inspect and replace the centering guide. No specifications are given for wear of the guide, but generally the guide should fit snugly on the transmission output shaft.

NOTE —

Some driveshafts have a dust cap installed on the end of the driveshaft, over the centering guide. The dust cap may become bent or distorted when the driveshaft is removed or installed. Damage to the dust cap should not affect the centering guide and should not be mistaken for guide wear.

1. Remove driveshaft. See **Driveshaft, removing and installing.**

2. Pack cavity behind centering guide with heavy grease until grease is flush with bottom edge of guide.

3. Insert 14 mm (approximately 1/2 in.) diameter mandrel or metal rod into guide. Strike guide with hammer. Centering guide is forced out.

NOTE —
The mandrel needs to fit snugly in the centering guide so that the grease cannot escape around the sides of the mandrel.

4. Remove old grease from driveshaft, lubricate new centering guide with molybdenum disulfide grease (Molykote Longterm 2® or equivalent) and drive it into the driveshaft.

NOTE —
The sealing lip of the guide should face outward and it should be driven into the driveshaft to a specified depth. See Fig. 13.

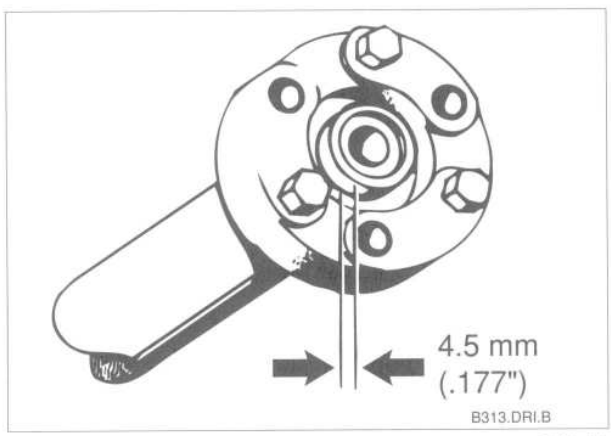

B313.dri.b

Fig. 13. When installing new driveshaft centering guide, drive guide in until its protrusion depth is as shown.

5. Reinstall the driveshaft.

Driveshaft constant velocity (CV) joint, replacing

The constant velocity (CV) joint on the rear of the driveshaft bolts directly to the final drive output flange. The CV joint can be replaced after removing the driveshaft. Always replace clamps, circlips, boots, gaskets, and covers. Have these items on hand before starting the job.

1. Remove driveshaft. See **Driveshaft, removing and installing**.

2. Remove boot clamp at back of CV joint.

3. At front of joint, remove circlip securing joint to shaft. Pull joint off driveshaft using a suitable puller. Remove bolts from joint.

NOTE —
The CV joint is cemented (Loctite®) to driveshaft and will require a puller to break free. The CV joint mounting bolt shoulders are knurled and need to be driven out of joint.

4. Pack the new joint with CV joint grease, working the grease down into the cage. Install a new gasket and dust cover.

CV Joint Lubricant Capacity (approx.)

- CV joint grease . . . . . 80 grams

NOTE —
Do not swivel the CV joint inner race when packing it with grease. The balls can fall out of the cage.

5. Tap bolts and retainers through joint holes. Clean splines on driveshaft and apply a small amount of bolt cement to splines.

6. Place joint boot on shaft. Install joint onto driveshaft and tap it on (use wooden dowel).

7. Install new circlip on shaft. Install new boot clamp.

8. Reinstall driveshaft.

Tightening Torque

- Driveshaft to final drive flange (with CV joint)
  - M8 ribbed nut . . . . . 43 Nm (32 ft-lb)
  - M8 compression nut . . . . . 32 Nm (23 ft-lb)
  - M10 ribbed nut . . . . . 70 Nm (52 ft-lb)
  - M10 compression nut . . . . . 64 Nm (47 ft-lb)

300 Suspension, Steering and Brakes—General

GENERAL 300-1
Front Suspension 300-1
Rear Suspension 300-2
Steering 300-2
Brakes 300-3

INTEGRATED SYSTEMS 300-3
Antilock Brake System (ABS) 300-3
Automatic Stability Control (ASC) and Automatic Stability Control+Traction (ASC+T) All-Season Traction (AST) 300-4
Self-Levelling Rear Suspension (LAD) 300-5

SUSPENSION AND STEERING TROUBLESHOOTING 300-5

TABLE
a. Suspension and Steering Troubleshooting . . . 300-6

GENERAL

3 Suspension, Steering and Brakes covers repairs to the front and rear suspension, the braking system, and the steering system including wheel alignment.

Front Suspension

Fig. 1 shows the double-pivot independent front suspension. Two main structural members serve as rigid mounting points for the suspension components. The control and thrust arms control front-to-back and side-to-side movement. The arms are connected to the crossmembers through rubber bushings and

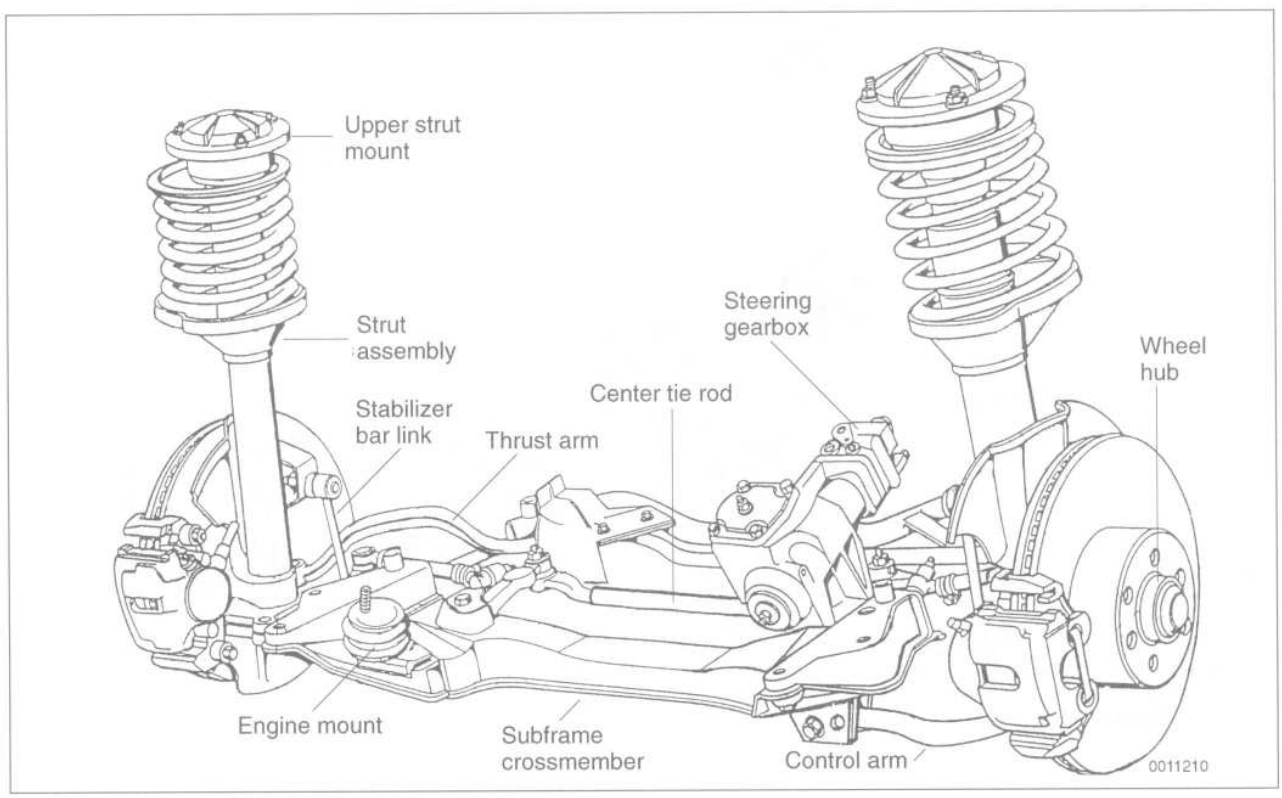

Fig. 1. BMW E34 front suspension.

to the bottom of the suspension struts through ball joints. A stabilizer bar distributes suspension loads during cornering.

Each front suspension strut assembly includes a shock absorber cartridge inside a tubular strut housing and a coil spring. The upper strut mounts allow the struts to turn with the wheels. The lower end of each strut housing includes the stub axle for the front wheel bearings and integral wheel hubs.

Rear Suspension

Fig. 2 shows the components of the independent rear suspension. The rear suspension uses a rear axle subframe as the main mounting point for the final drive housing and the rear suspension components. Trailing arms locate the rear wheels and anchor the spring struts and the stabilizer bar. Drive axles with constant-velocity (CV) joints at both ends transfer power from the differential to the road wheels.

The differential (also called final drive unit) is mounted to the rear axle carrier through rubber mounts and bushings to help isolate drivetrain noise and vibration.

Steering

The variable-assist power steering system consists of an engine-driven hydraulic pump, a ball-and-nut type steering gearbox with integral hydraulic control valve, and connecting linkage to the road wheels. At low speeds, maximum power assist is provided to ease parking and city driving. At high speeds, assist is reduced to ensure stability.

The standard power steering system varies power assist based on engine speed. Maximum power assist is provided at low engine speeds and is reduced as engine speed increases.

The BMW Servotronic power steering system (used on late-model cars only) varies assist electronically according to road speed. An electronic/hydraulic valve on the steering gearbox controls power assist via the Servotronic electronic control unit (ECU).

The steering linkage connects to the steering gearbox through a pitman arm to the wheels. An idler arm maintains correct toe angle and the tie rod ends allow the wheels to pivot and react to suspension travel. The steering gearbox and steering linkage are shown in Fig. 3.

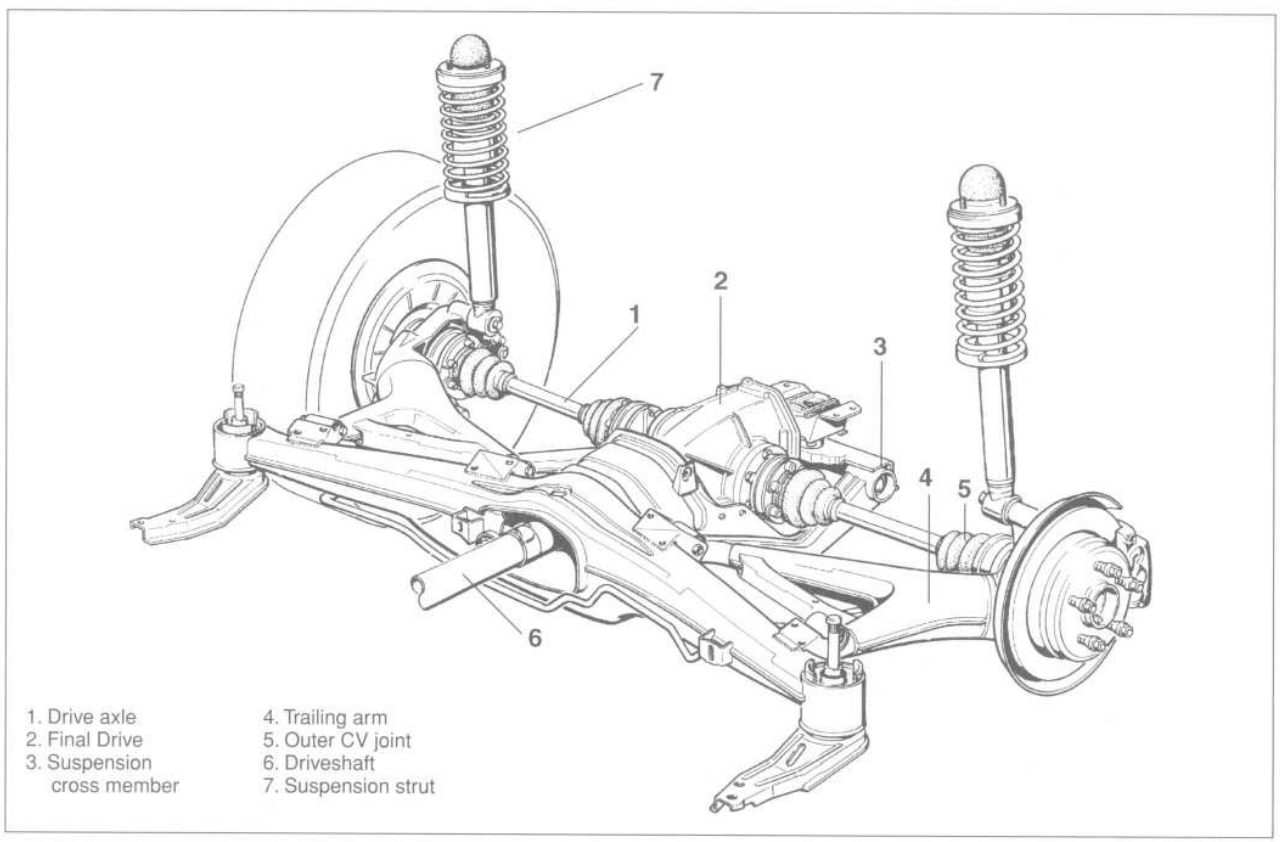

Fig. 2. BMW E34 rear suspension.

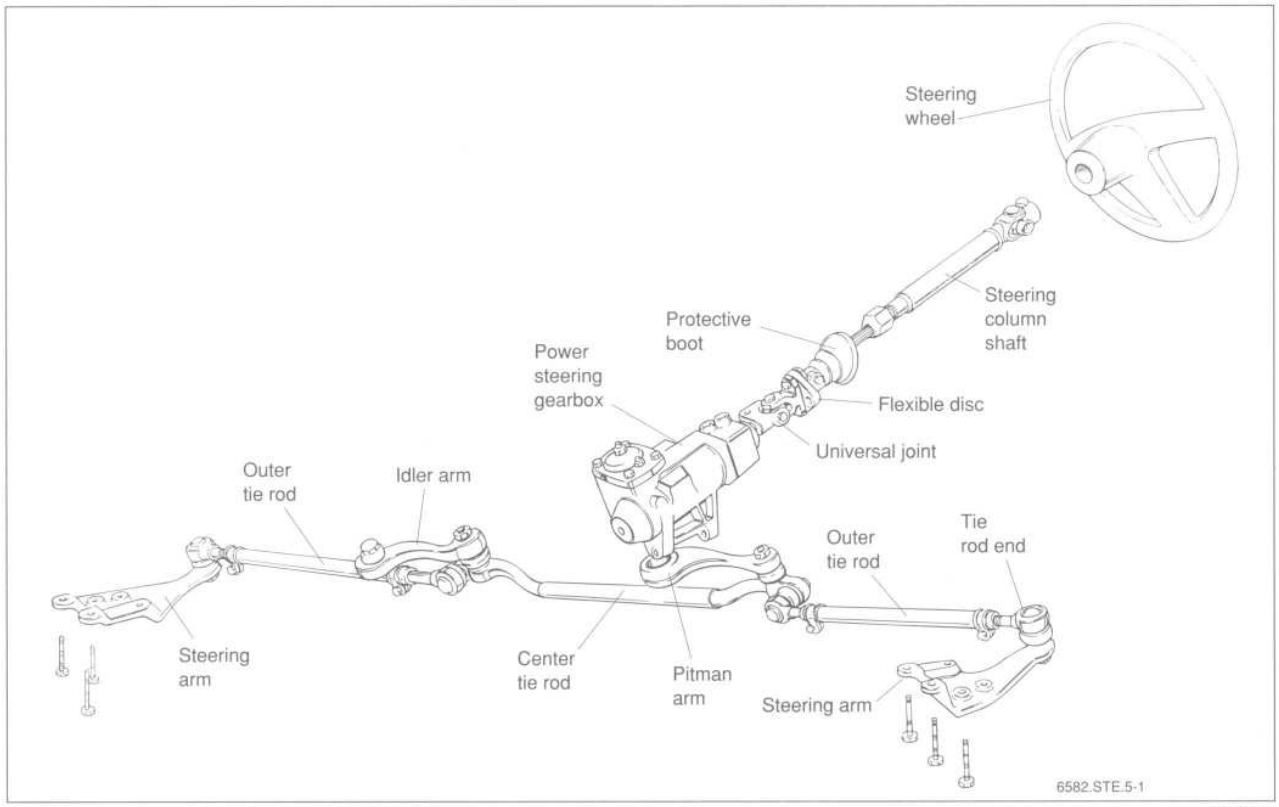

Fig. 3. Steering gearbox and linkage.

Brakes

The E34 5-series is equipped with power disc brakes with an integral Antilock Brake System (ABS). The parking brake is a dual-drum system integrated with the rear brake discs. See Fig. 4.

Power assist is provided by a vacuum booster. The vacuum booster uses engine vacuum to help actuate the master cylinder and reduce pedal effort when the engine is running. The brake pedal pushrod is connected directly to the master cylinder, so failure of the vacuum booster does not normally result in total brake failure.

The dual-chamber master cylinder pressurizes two separate hydraulic circuits. The front circuit actuates the left front and right rear brakes. The rear circuit actuates the right front and left rear brakes. If one circuit fails, the remaining circuit can still provide a portion of the braking force.

Each disc brake uses a caliper with a single hydraulic cylinder. Front and rear rotors are mounted to the wheel hubs. Disc brakes automatically adjust for brake pad and rotor wear. Brake pads in the left front and right rear brakes contain wear sensors. When the pads need replacement, the sensors illuminate a light on the dashboard.

INTEGRATED SYSTEMS

BMW E34 cars include several advanced systems that integrate with other systems to enhance driveability, safety and performance. ABS is standard on all E34 cars. Other integrated systems include traction control and self-levelling suspension. These systems were not installed on all cars. Some systems were standard on some models and installed as optional equipment on others.

Antilock Brake System (ABS)

The electronically-controlled ABS maintains vehicle stability and control during emergency braking by preventing wheel lock-up. ABS provides optimum deceleration and stability during emergency braking. It automatically adjusts the hydraulic pressure at each wheel to prevent wheel lock.

The system's main components are the wheel speed (pulse) sensors, the ABS control module, and the hydraulic control unit. See Fig. 5. The wheel speed sensors continuously send wheel speed signals to the control unit. The control module compares these signals to determine, in fractions of a second, whether any of the wheels are about to lock. If any wheel is nearing a lock-up condition, the control module signals the hydraulic unit to maintain or reduce hydraulic pressure at the appropriate wheel(s). Pressure is modulated by electrically-operated solenoid valves in the hydraulic unit.

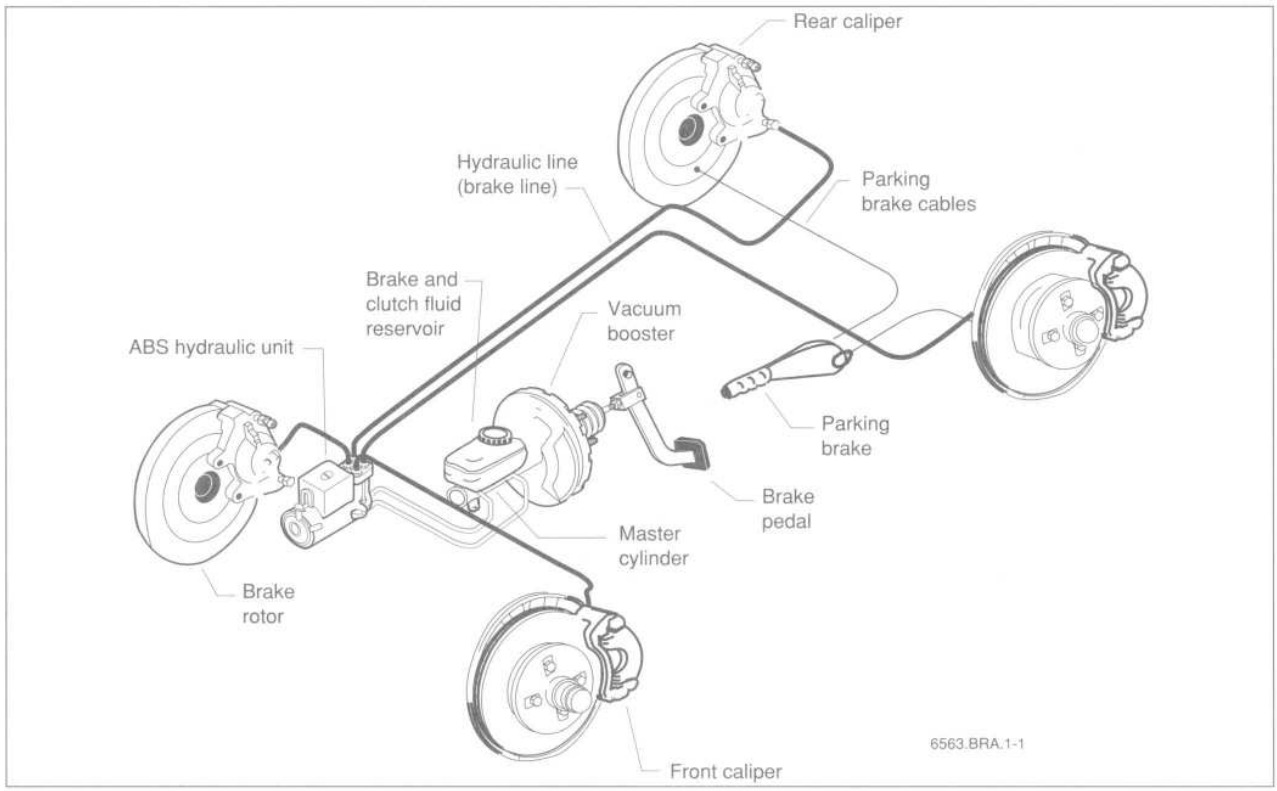

0006563

Fig. 4. Schematic view of dual circuit brakes with ABS. Four channel ABS shown, some models use 3-channel system.

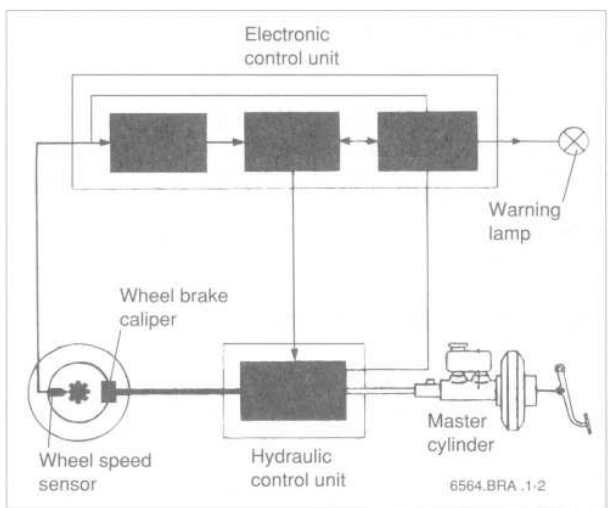

0006564

Fig. 5. Schematic representation of ABS.

Automatic Stability Control (ASC) Automatic Stability Control+Traction (ASC+T) All-Season Traction (AST)

The traction control system, known by different names depending on model year, works in conjunction with the ABS and the DME engine management system to enhance vehicle control. In addition to the normal ABS function, the traction control system also controls engine throttle and engine timing to reduce engine torque so that maximum vehicle stability is maintained.

ASC+T and AST are further developments of the earlier ASC system. The ASC+T system improves traction by electronically applying the rear brakes when the rear drive wheels are spinning at a faster rate than the front wheels.

Each of the traction control systems are designed to be maintenance free. There are no adjustments that can be made. Repair and troubleshooting of the ASC and ASC+T systems requires special test equipment and knowledge and should be performed only by an authorized BMW dealer.

Self-levelling Rear Suspension (LAD)

The self-levelling rear suspension system, called LAD (Load Absorption Dampening), uses mechanical and hydraulic components to monitor and adjust the rear suspension ride height based on load and driving conditions. The LAD system uses hydraulic pressure (supplied by an additional pump integrated with the power steering pump) to adjust the height of the rear shock absorbers under varying load and driving conditions. This maintains the rear ride height at a predetermined level.

A camber warning switch is used to monitor suspension loading via the instrument cluster and check control. If the rear axle is loaded beyond the regulating limit of the LAD system (i.e. excessive wheel camber), the check control warning **SUSPN LEVELLING** will be displayed. The camber warning switch is mounted on the rear axle subframe. For additional information on LAD see **330 Rear Suspension.**

SUSPENSION AND STEERING TROUBLESHOOTING

Stable handling and ride comfort both depend on the integrity of the suspension and steering components. Any symptom of instability or imprecise road feel may be caused by worn or damaged suspension components.

In addition to inspecting for worn parts, troubleshooting must also consider the condition of tires, wheels, and their alignment. Tire wear and incorrect inflation pressures can dramatically affect handling. Subtle irregularities in wheel alignment angles also affect stability. Mixing different types or sizes of tires, particularly on the same end of the car, can affect alignment and may unbalance a car's handling.

Table a lists symptoms of suspension and steering problems and their probable causes, and suggests corrective actions.

NOTE—
Brake system troubleshooting is covered in **340 Brakes**.

Table a. Suspension and Steering Troubleshooting

Symptom	Probable cause	Corrective action
1. Car pulls to one side, wanders	a. Incorrect tire pressure b. Incorrect wheel alignment c. Faulty brakes (pulls only when braking)	a. Check and correct tire pressures. b. Check and adjust wheel alignment. c. Check for sticking/damaged front caliper.
2. Steering heavy, poor return-to-center	a. Worn upper strut bearing(s) b. Incorrect tire pressure c. Power steering system faulty	a. Replace strut bearings. b. Check and correct tire pressures. c. Check power steering fluid level. Test system pressure.
3. Front-end or rear-end vibration or shimmy	a. Worn strut shock absorber cartridges b. Worn suspension bushings (control arm, thrust arm, trailing arm, crossmember) c. Worn front suspension ball joints (control arm, thrust arm, steering tie-rod end) d. Unbalanced or bent wheels/tires e. Loose wheel lug bolts	a. Replace strut cartridges. b. Replace worn bushings. c. Replace worn ball joints. d. Balance tires. Check tires for uneven wear patterns. Check wheels for damage. e. Tighten lug bolts to proper torque.
4. Poor stability, repeated bouncing after bumps, suspension bottoms out easily	a. Worn strut shock absorber cartridges	a. Replace strut cartridges.
5. Suspension noise (especially over bumps)	a. Worn front upper strut bearings(s) b. Loose front strut cartridge c. Worn suspension bushings (control arm, thrust arm, trailing arm, crossmember) d. Worn stabilizer bar rubber mounts e. Loose front suspension crossmember	a. Replace upper strut bearings. b. Check/tighten strut cartridge collar nut. c. Replace worn bushings. d. Replace stabilizer bar rubber mounts. e. Check crossmember for damage. Tighten mounting bolts.
6. Uneven ride height	a. Incorrect coil springs b. Bent or damaged suspension components c. Sagging coil springs d. Faulty Self-levelling (LAD) system (where applicable).	a. Measure ride height and replace springs as required. b. Inspect and repair/replace as necessary. c. Check and adjust ride height. Test LAD system. d. Test LAD system. Check and adjust ride height.
7. Wheel noise, continuous growling, may be more noticeable when turning	a. Worn wheel bearing	a. Replace wheel bearing.
8. Steering loose, imprecise	a. Incorrect tire pressure b. Loose steering gearbox mounting bolt(s) c. Worn tie rod end(s) d. Faulty front wheel bearing e. Worn or damaged steering gearbox	a. Check and correct tire pressures. b. Inspect and tighten bolts. c. Replace tie rod(s) and align wheels. d. Replace wheel bearing. e. Adjust or replace steering gearbox.

310 Front Suspension

GENERAL 310-1

SHOCK ABSORBERS AND SPRINGS . . . 310-2
To remove and install strut assembly 310-2
To disassemble and assemble strut 310-3

RIDE HEIGHT 310-5

CONTROL ARMS 310-5
To remove and install control arm 310-5
To replace control arm bushings (steel control arms only) 310-6

FRONT WHEEL BEARINGS 310-7
To replace wheel bearing 310-7

STABILIZER BAR 310-8
To remove and install stabilizer bar 310-8

THRUST ARMS 310-9
To remove and install thrust arm 310-9
To replace thrust arm bushings 310-10

SUBFRAME CROSSMEMBER 310-11
To remove subframe crossmember 310-11
To install subframe crossmember 310-12

TABLE
a. Front Ride Height Specifications 310-5

310

GENERAL

The front suspension is shown in Fig. 1. For a general description of the front suspension and components, see **300 Suspension, Steering and Brakes—General**.

Special service tools are required for most of the work described in this repair group. Read the procedures through before beginning any job.

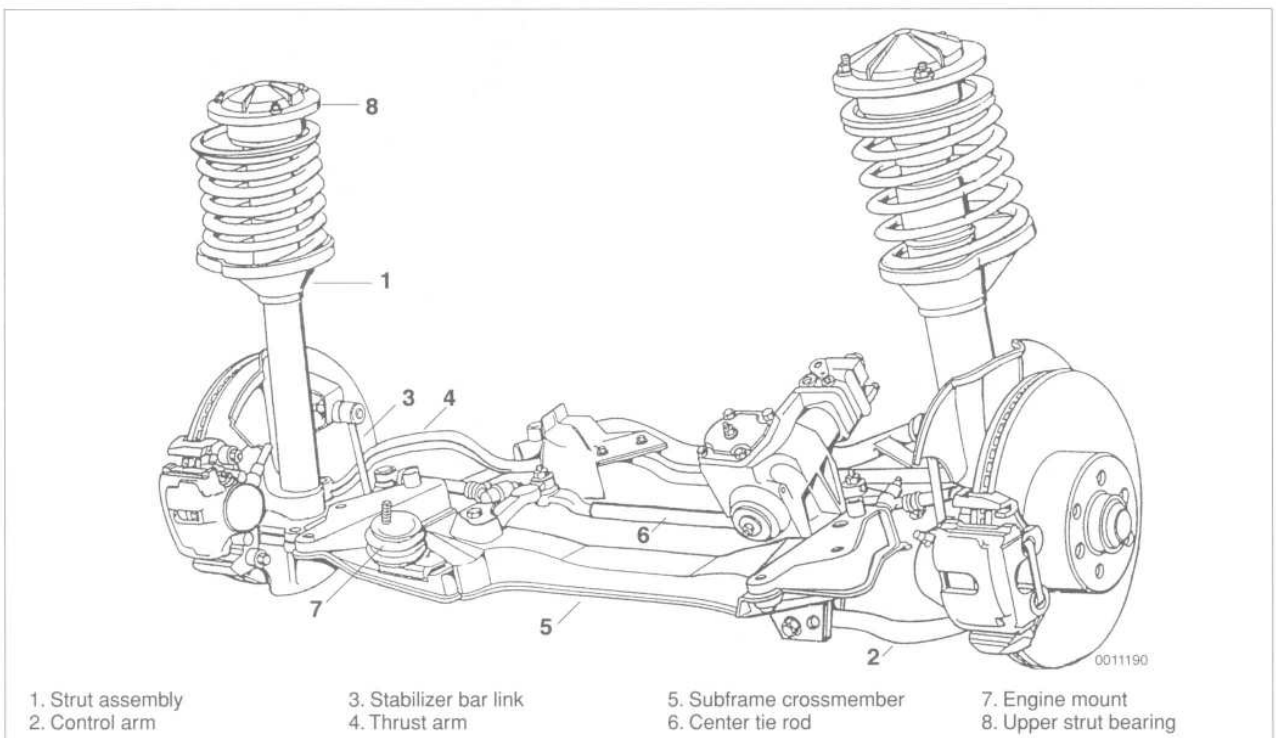

1. Strut assembly
2. Control arm
3. Stabilizer bar link
4. Thrust arm
5. Subframe crossmember
6. Center tie rod
7. Engine mount
8. Upper strut bearing

Fig. 1. BMW E34 front suspension.

WARNING —

- *Physical safety could be impaired if procedures described here are undertaken without the proper service tools and equipment. Be sure to have the right tools on hand before beginning any job.*
- *Do not reuse self-locking nuts or bolts. They are designed to be used only once and may fail if reused. Always replace self-locking fasteners anytime they are loosened or removed.*
- *Do not install bolts and nuts coated with undercoating wax, as the correct tightening torque cannot be assured. Always clean the threads with solvent before installation, or install new parts.*
- *Do not attempt to weld or straighten any suspension components. Replace damaged parts.*

SHOCK ABSORBERS AND SPRINGS

Fig. 2 shows a front strut assembly. Most strut assembly components are available as replacement parts, although the most commonly replaced parts are the strut cartridges, the upper strut mounts, and the coil springs.

NOTE —

Shock absorber cartridges and springs should always be replaced in pairs.

To remove and install strut assembly

1. Raise the car and remove the front wheel.

WARNING —

Make sure that the car is firmly supported on jack stands designed for the purpose. Place the jack stands beneath a structural chassis point. Do not place jack stands under suspension parts.

2. Unbolt the brake caliper assembly, keeping the brake hose connected. Secure the brake caliper with wire and do not let it hang from the brake hose. See **340 Brakes**.
3. Remove the ABS pulse sensor. See Fig. 3.
4. Remove the brake fluid line, ABS sensor wire harness, and brake pad wear sensor wire harness from the strut housing.
5. Remove the stabilizer bar link from the strut assembly.
6. Remove the strut-to-steering arm mounting bolts. Pull the steering arm off of the strut assembly. See Fig. 4.

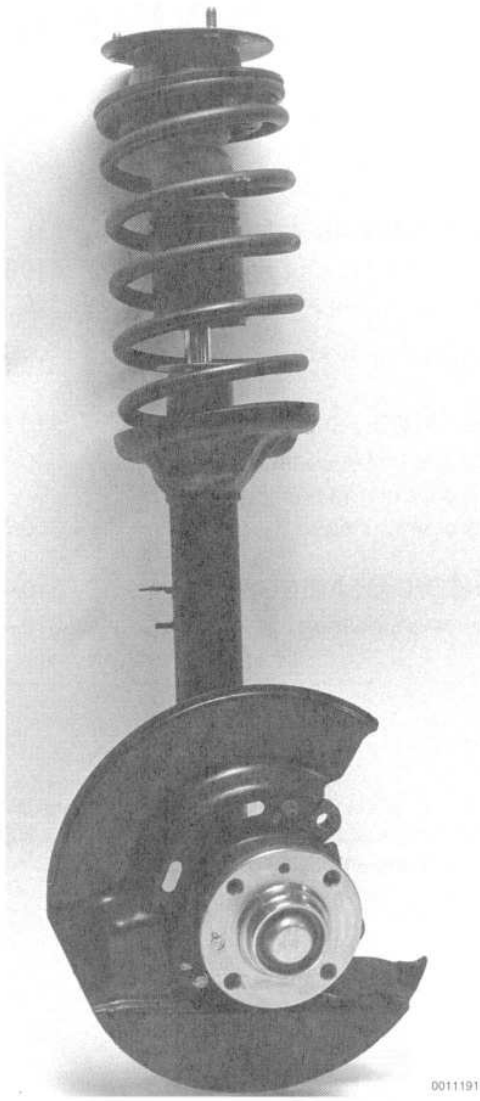

Fig. 2. Front strut assembly.

7. Support the strut assembly from below and then remove the strut mounting nuts on the strut tower. Remove the strut assembly from the car.

NOTE —

Store the removed strut assembly upright. Do not allow it to lay horizontally or upside-down for any length of time. If incorrect storage has occurred, place the strut assembly upright with the rod fully extended for at least 24 hours.

8. Make sure all thread bores, bolts, nuts and mating surfaces are clean.

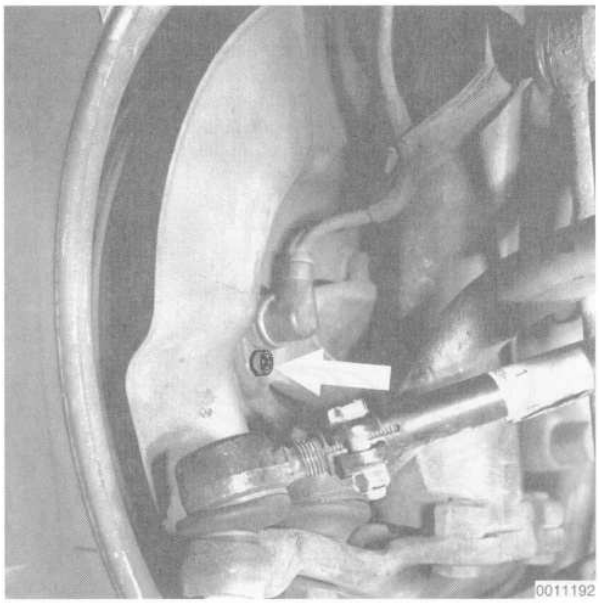

Fig. 3. ABS pulse sensor mounting bolt (**arrow**).

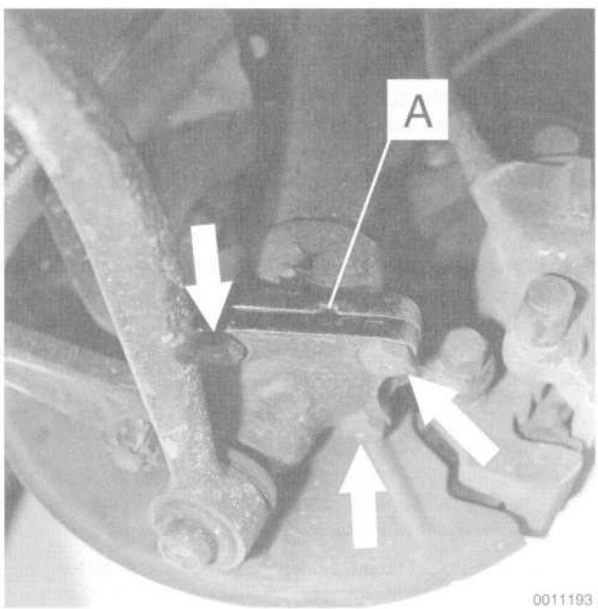

Fig. 4. Strut-to-steering arm mounting bolts (**arrows**). Note mating notch (**A**) when installing steering arm to strut assembly.

9. Install the strut assembly to the strut tower using new self-locking nuts.

Tightening Torques

- Strut assembly to body (self-locking nuts) . . . . . 22 Nm (16 ft-lb)

10. Install the steering arm to the strut assembly, making sure the mating notches are aligned (see Fig. 4). Use Loctite 270® or equivalent on the bolts before installing.

Tightening Torques

- Steering arm to strut housing (use Loctite 270® or equivalent . . . . 110 Nm (81 ft-lb)

11. The remainder of installation is the reverse of removal.

Tightening Torques

- Brake caliper to strut housing . . . . . 110 Nm (81 ft-lb)
- Road wheel to hub . . . . . 100 ± 10 Nm (74 ± 7 ft-lb)
- Stabilizer link to strut housing . . . . . 59 Nm (43 ft-lb)

To disassemble and assemble strut

Replacing the upper strut mount, spring, and strut cartridge requires that the strut first be disassembled. This procedure requires a spring compressor specifically designed for the purpose.

Springs and strut cartridges should always be replaced in pairs.

> ***WARNING —***
> *Do not attempt to disassemble the struts without a spring compressor designed specifically for this job.*

1. Remove the strut assembly from the car as described above.
2. Using a spring compressor, compress the spring until the spring force on the upper mount is relieved.

> ***WARNING —***
> *Make sure the spring compressor grabs the spring properly before compressing it.*

3. Pry the protective cap off the top of the strut assembly. then remove the top (center) nut and washer while holding the strut shaft stationary.
4. Remove the upper strut mount and related components. See Fig. 5.

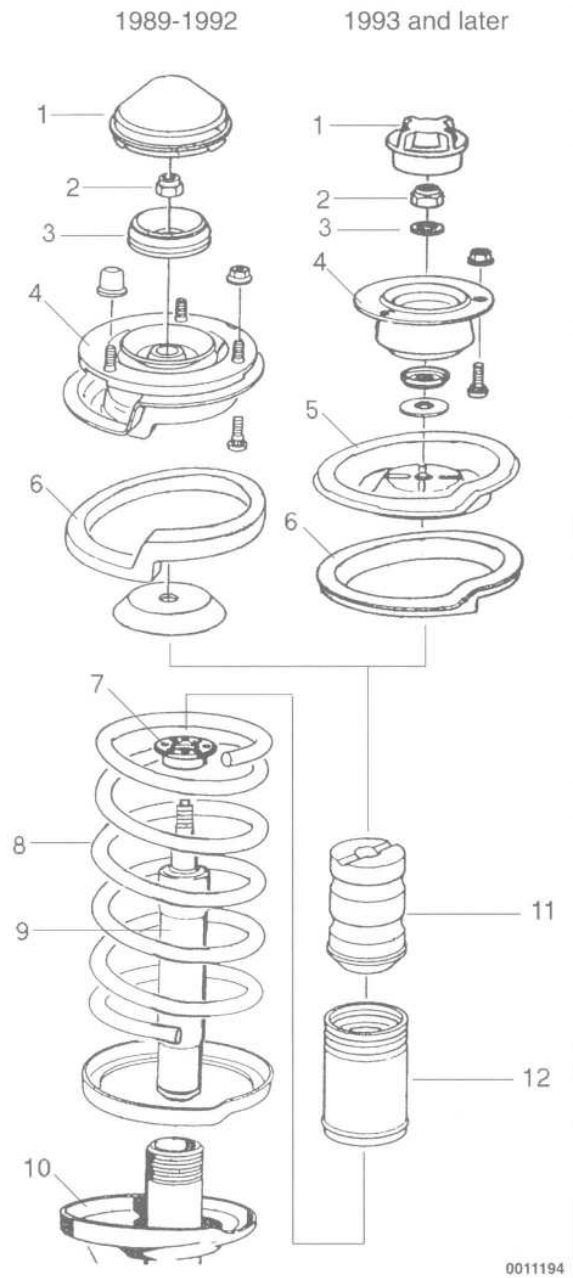

1. Protective cap
2. Top nut (self-locking)
3. Washer
4. Upper strut mount
5. Upper spring seat
6. Rubber spring pad
7. Strut cartridge retaining collar
8. Spring
9. Strut cartridge
10. Strut housing
11. Bump stop
12. Protective tube

Fig. 5. Exploded view of front strut assembly.

NOTE —

Inspect the strut mounts to determine if they are special camber correcting type mounts. These special mounts are marked with a "+" or "–" near a mounting stud. See Fig. 6. When replacing the mount, be sure to replace it with the same type of mount to maintain front wheel alignment settings.

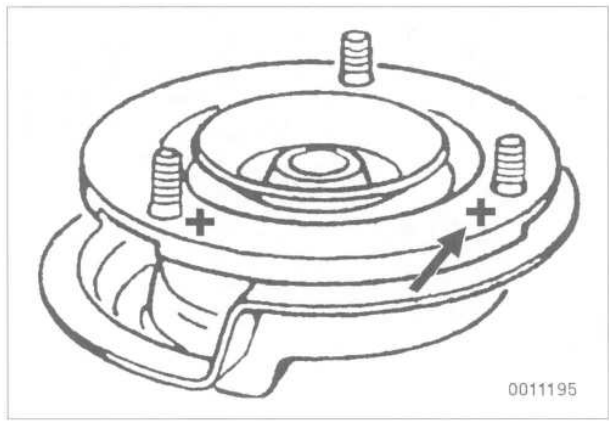

Fig. 6. Special camber correcting strut mounts are identified by a "+" or "–" mark (arrow).

5. Release the spring compressor carefully and evenly, allowing the spring to slowly expand.
6. Remove the rubber stop and protective tube from the strut cartridge shaft.
7. Loosen the strut cartridge retaining collar and remove the cartridge from the housing.
8. If there is oil in the housing pour it out. Clean out the housing.

NOTE —

- *Hydraulic-type strut cartridges are installed in the strut housing with a small amount of oil for cooling. Gas-pressure strut cartridges do not require oil.*
- *Store the removed strut assembly/shock absorber standing upright. Do not allow it to lay horizontally or upside-down for any length of time. If incorrect storage has occurred, place the strut assembly upright with the rod fully extended for at least twenty four hours.*

9. Assembly is the reverse of disassembly. Use Fig. 5 as a guide during assembly. If installing hydraulic-type strut cartridges, pour 30 ml (1 fl. oz.) of motor oil to the housing before installing the new cartridge. Be sure to use a new self-locking top (center) nut.

WARNING —
Make sure the self-locking top nut is fully tightened before releasing the spring compressor. Always use a new nut.

Tightening torques

- Shock cartridge retaining collar to strut housing . . . . . 130 Nm (96 ft-lb)
- Upper strut mount to strut cartridge shaft (self-locking nut - always replace)
  shaft with external hexagon . . . . . 65 Nm (48 ft-lb)
  shaft with internal hexagon . . . . . 45 Nm (33 ft-lb)
- Road wheel to hub . . . . . 100 ± 10 Nm (74 ± 7 ft-lb)

RIDE HEIGHT

Ride height is measured from the lower edge of the wheel arch to the bottom edge of the wheel rim. See Fig. 7. If the ride height is outside the specification listed, new springs should be installed. Be sure to have the old spring code number on hand when ordering new springs.

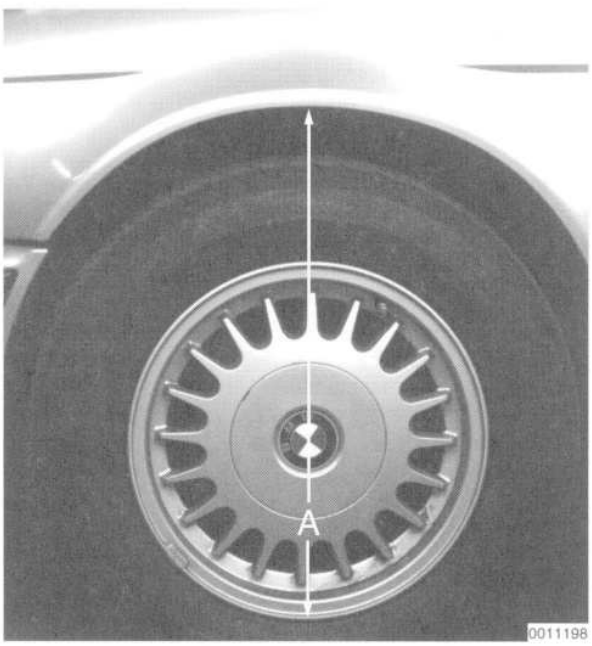

Fig. 7. Ride height measurement (**A**) is taken from center of wheel arch to bottom of wheel rim. Measure ride height with car in normal loaded position on the ground.

Table a lists front suspension ride height specifications for the cars covered by this manual. These specifications apply to a car in a normally loaded position. When checking ride height or installing suspension components that require the car to be "normally loaded," load the car as follows:

Normal loaded position

- Each front seat . . . . . 68 kg (150 lb)
- Center of rear seat . . . . . 68 kg (150 lb)
- Trunk . . . . . 21 kg (46 lb)
- Fuel tank . . . . . full

Table a. Front Ride Height Specifications

Wheel (rim) installed	Ride Height
15 in.	
standard suspension	588 mm (23 1/8 in)
Sport suspension	568 mm (22 3/8 in)
M-Technic suspension	563 mm (22 1/8 in)
TRX 390	
standard suspension	592 mm (23 1/4 in)
Sport suspension	572 mm (22 1/2 in)
M-Technic suspension	568 mm (22 3/8 in)
TRX 415	
standard suspension	602 mm (23 3/4 in)
Sport suspension	582 mm (22 7/8 in)
M-Technic suspension	577 mm (22 3/4 in)

CONTROL ARMS

The control arms are attached to the front crossmember through rubber bushings and to the steering arm by ball joints. If worn, the control arm ball joint can only be replaced as part of an entire control arm assembly.

Some special tools may be required to remove the control arms and to replace the control arm bushings. Read the procedure through before beginning the job.

To remove and install control arm

1. Raise the car and remove the wheel.

WARNING —
Make sure that the car is firmly supported on jack stands designed for the purpose. Place the jack stands beneath a structural chassis point. Do not place jack stands under suspension parts.

2. Remove the strut-to-steering arm mounting bolts and separate the steering arm from the strut. See Fig. 4, given earlier.

3. Working at the steering arm, remove the ball joint nut. See Fig. 8.

4. Lightly tap the ball joint from the steering arm.



Fig. 8. Control arm ball joint (**arrow**).

> ***CAUTION —***
> *Take care not to damage the ball joint threads if the control arm is to be reused. If necessary, press the ball joint out using BMW special tool no. 31 1 110 or an equivalent press.*

5. Working at the other end of the control arm, remove the through-bolt attaching the control arm to the crossmember. See Fig. 9.

6. Make sure all thread bores, bolts, nuts and mating surfaces are clean.

7. Install the bushing-end of the control arm to the crossmember, using washers on both sides of the bolt and a new self-locking nut. Do not tighten the nut at this time.

8. Install the control arm ball joint to the steering arm using a new self-locking nut.

Tightening Torques

- Control arm ball joint to steering arm . . . . . 93 Nm (68 ft-lb)

9. Install the steering arm to the strut, making sure the mating notch is aligned. See Fig. 4, given earlier. Use locking compound (Loctite 270® or equivalent) on the bolts and tighten.

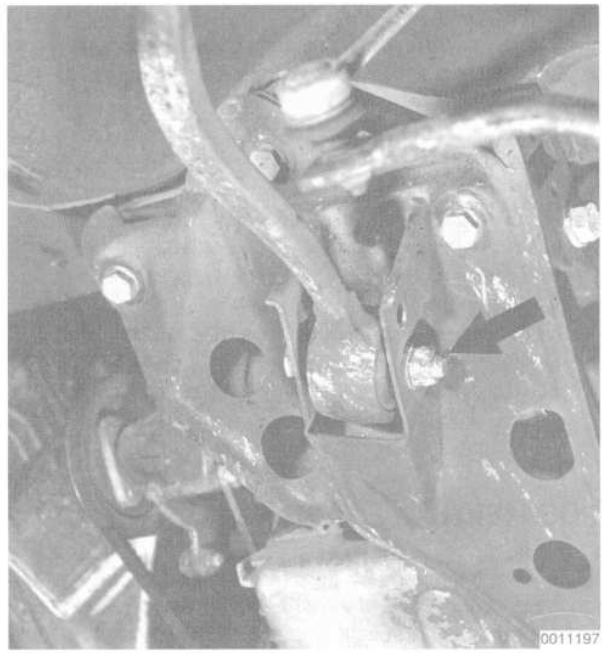

Fig. 9. Control arm through-bolt (**arrow**).

Tightening Torques

- Strut housing to steering arm (use Loctite 270® or equivalent . . . . 110 Nm (81 ft-lb)

10. Install the wheel and lower the car. Load the car to the normal loaded position as described earlier under **Ride Height**. With the car on the ground and loaded, tighten the control arm bushing through-bolt.

Tightening Torques

- Control arm to crossmember (car in normal loaded position) . . . . . 78 Nm (57 ft-lb)
- Road wheel to hub . . . . . 100 ± 10 Nm (74 ± 7 ft-lb)

To replace control arm bushings (steel control arms only)

Control arm bushings should always be replaced in pairs.

> ***NOTE —***
> *Two types of control arms are installed on the E34 cars; aluminum construction and steel construction. On cars with aluminum control arms, the entire control arm must be replaced if the bushing is worn. On cars with steel control arms, the bushings are available as replacement parts.*

1. Raise the car and remove the wheel.

> ***WARNING —***
> *Make sure that the car is firmly supported on jack stands designed for the purpose. Place the jack stands beneath a structural chassis point. Do not place jack stands under suspension parts.*

2. Remove the control arm from the car as described earlier.

> ***NOTE —***
> *The control arm bushings can be replaced with the control arm installed in the car if BMW special press tools 31 1 051 and 33 3 141/142/144 are available.*

3. Using a service press and appropriate press tools, press the bushing out of the control arm.

4. Clean the bushing bore and install the new bushing from the chamfered side of the bushing bore in the arm.

5. Install the control arm as described above.

> ***CAUTION —***
> *Tighten the control arm bushing through-bolt to its final torque only with car on the ground and the suspension normally loaded as described earlier.*

FRONT WHEEL BEARINGS

The front wheel bearings are permanently sealed and require no maintenance. The bearing is integral with the wheel hub and pressed onto the strut assembly stub axle.

Special press tools are required to replace the front wheel bearings. Read the procedure through before beginning the job.

To replace wheel bearing

1. Raise the car and remove the wheel.

> ***WARNING —***
> *Make sure that the car is firmly supported on jack stands designed for the purpose. Place the jack stands beneath a structural chassis point. Do not place jack stands under suspension parts.*

2. Pry off the grease cap from the center of the wheel hub.

3. Bend back the staked part of the wheel hub collar nut. See Fig. 10.

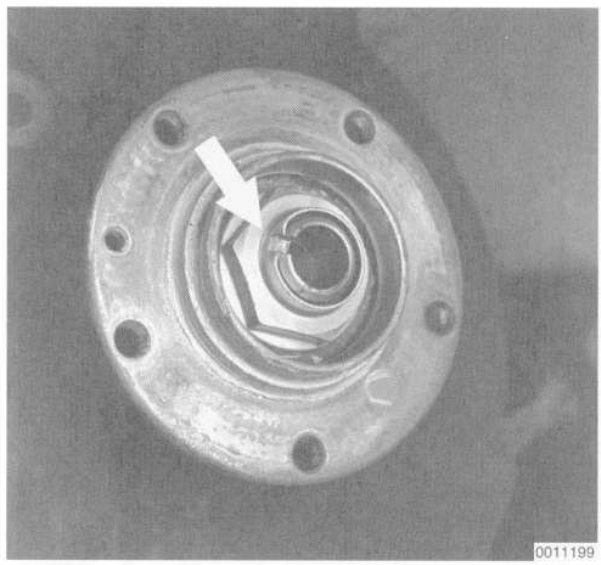

Fig. 10. Staked part of collar nut bent back (**arrow**).

4. Remount the wheel and lug nuts. Lower the car to the ground to gain leverage in loosening the collar nut.

5. Remove the center cap from the wheel and then loosen the collar nut. Do not remove the nut completely.

> ***NOTE —***
> *The wheel hub collar nut is tightened to a torque of 290 Nm (214 ft-lb). Make sure the car is firmly on the ground and use heavy-duty tools when loosening the nut.*

6. Raise the car and remove the wheel.

7. Remove the ABS pulse sensor. See Fig. 3 given earlier.

8. Unbolt the brake caliper assembly and rotor as described in **340 Brakes.** Leave the brake hose connected to the caliper. Suspend the caliper assembly from the chassis with strong wire.

9. Remove the wheel hub collar nut.

10. Remove the wheel hub with integral wheel bearing from the stub axle using a puller (BMW special tool nos. 31 2 102/105/106 or equivalents). See Fig. 11.

11. If the bearing inner race stays on the stub axle, remove the splash guard and use a two-jaw puller (BMW special tool no. 31 2 102 or equivalent) to remove the race.

12. Install the splash guard and a new dust shield behind the bearing. Press the new wheel hub/bearing assembly on using BMW special tool no. 31 2 110 or an equivalent pressing tool.

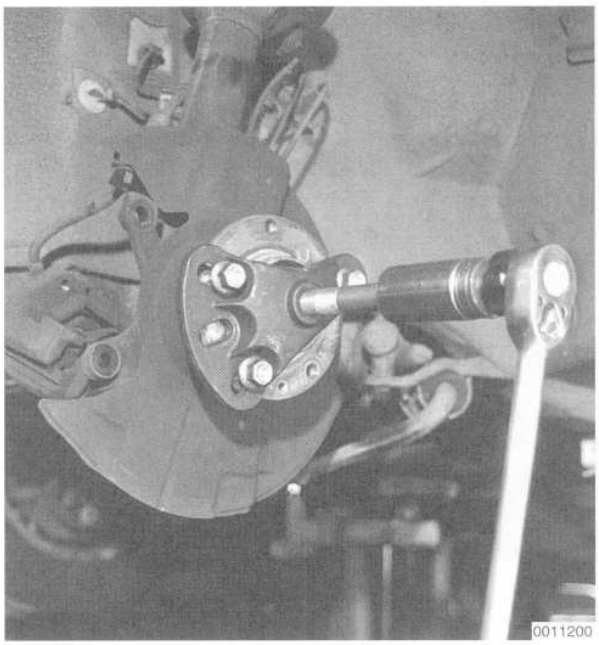

Fig. 11. Wheel hub with integral wheel bearing being removed using a puller.

NOTE —
When pressing the wheel hub/bearing on, apply force only to the bearing inner race.

13. Install a new collar nut. Do not tighten the nut to its final torque at this time.

14. Install the brake rotor and mount the wheel and lug nuts. Lower the car to the ground to gain leverage.

Tightening Torque
- Brake rotor to wheel bearing/hub assembly . . . . . 16 Nm (12 ft-lb)

15. Tighten the collar nut and then stake the nut to the axle. See Fig. 10 given earlier.

Tightening Torque
- Collar nut to stub axle . . . . . 290 Nm (214 ft-lb)

16. Raise the car and remove the wheel.

17. Install the brake caliper as described in **340 Brakes**.

Tightening Torque
- Brake caliper to strut housing . . . . . 110 Nm (81 ft-lb)

18. Install a new grease cap, using Loctite® 638 sealant or equivalent.

19. Install the wheel and lower the car.

Tightening Torque
- Road wheel to hub . . . . . 100 ± 10 Nm (74 ± 7 ft-lb)

STABILIZER BAR

To remove and install stabilizer bar

1. Raise the car and remove both wheels.

> ***WARNING —***
> *Make sure that the car is firmly supported on jack stands designed for the purpose. Place the jack stands beneath a structural chassis point. Do not place jack stands under suspension parts.*

2. Remove the lower connecting link nuts and tap the links out of the stabilizer bar. See Fig. 12.

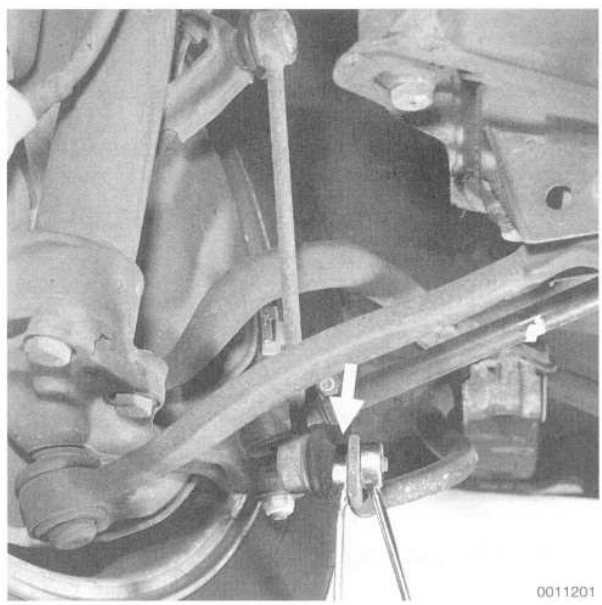

Fig. 12. Stabilizer bar connecting link being removed. Counterhold link from behind (**arrow**) when removing nut.

3. Unbolt the two stabilizer bar bushing brackets and remove the bar. See Fig. 13.

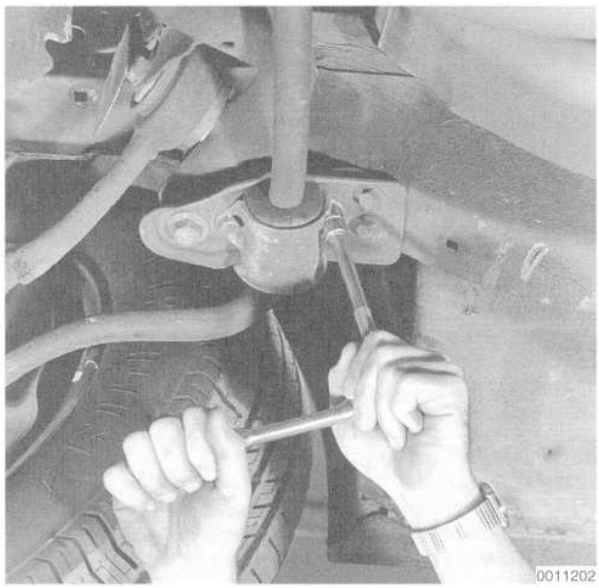

Fig. 13. Stabilizer-to-crossmember mounting bracket being removed.

4. Installation is the reverse of removal. Use new self-locking nuts on the connecting links.

NOTE —

Installation of the stabilizer bar is easiest with the car level (front wheels at the same height), and as near to normal ride height as possible.

Tightening Torques

- Stabilizer bar mounting brackets to subframe . . . . . 22 Nm (16 ft-lb)
- Connecting link to strut housing or stabilizer bar. . . . . 59 Nm (43 ft-lb)

THRUST ARMS

The thrust arms are attached to the connecting subframe crossmember through hydraulic bushings and to the steering arms by ball joints.

Inspect the ball joints for wear and looseness. Inspect the bushings for fluid leaks. The ball joint can only be replaced as part of an entire thrust arm assembly. The hydraulic bushings are available as individual replacement parts and should always be replaced in pairs.

NOTE —

- *Steering wheel vibration during braking (usually at road speeds of 50 to 60 m.p.h.) can often be caused by faulty thrust arm bushings and not warped brake rotors. Be sure to inspect the bushings for leaking fluid and replace them if any fluid leaks are present.*
- *Some very early 1988 cars may be equipped with the old-style rubber bushings. These rubber bushings should have been removed and replaced with the newer hydraulic bushings during the new car pre-delivery inspection or during the first service visit. The hydraulic bushings can be identified by plastic clips on either side of the bushing. If the old-style rubber bushings are still installed, they should be replaced with the later-style hydraulic bushings.*

To remove and install thrust arm

1. Raise the car and remove the wheel.

> ***WARNING —***
> *Make sure that the car is firmly supported on jack stands designed for the purpose. Place the jack stands beneath a structural chassis point. Do not place jack stands under suspension parts.*

2. Unscrew the ball joint nut from the steering arm. Lightly tap the ball joint out of the steering arm. See Fig. 14.

> ***CAUTION —***
> *Take care not to damage the ball joint threads if the thrust arm is to be reused. If necessary, press the ball joint out using BMW special tool no. 31 2 140 or an equivalent press.*

3. Remove the through-bolt attaching the thrust arm to the connecting crossmember. See Fig. 15.

4. Make sure all thread bores, bolts, nuts and mating surfaces are clean.

5. Install the bushing-end of the thrust arm to the crossmember using washers on both sides of the bolt and a new self-locking nut. Do not tighten the nut at this time.

6. Install the thrust arm ball joint to the steering arm using a new self-locking nut.

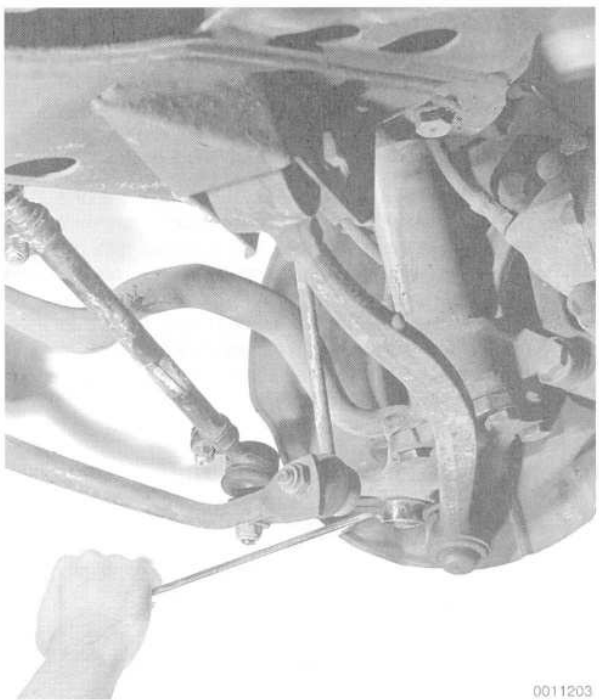

Fig. 14. Thrust arm ball joint being removed from steering arm.



Fig. 15. Thrust arm through-bolt (**arrow**).

Tightening Torques

- Thrust arm ball joint to steering arm . . . . . 93 Nm (68 ft-lb)

7. Install the wheel and lower the car. Load the car to the normal loaded position as described earlier under **Ride Height**. With the car on the ground and loaded, tighten the thrust arm bushing through-bolt.

Tightening Torques

- Thrust arm to connecting crossmember (car in normal loaded position) . . . . . 127 Nm (94 ft-lb)
- Road wheel to hub . . . . . 100 ± 10 Nm (74 ± 7 ft-lb)

To replace thrust arm bushings

Thrust arm bushings should always be replaced in pairs.

1. Raise the car and remove the wheel.

> ***WARNING —***
> *Make sure that the car is firmly supported on jack stands designed for the purpose. Place the jack stands beneath a structural chassis point. Do not place jack stands under suspension parts.*

2. Remove the thrust arm from the car as described earlier.

3. Using a service press and appropriate press tools (BMW special tool no.s 31 1 052/053 or equivalent), press the bushing out of the thrust arm.

4. Clean the bushing bore and press in the new bushing while aligning the arrow on the bushing with the mark on the thrust arm. See Fig. 16. Press the bushing in so it protrudes equally from both sides of the thrust arm.

> ***CAUTION —***
> *To avoid damaging the new hydraulic bushing, press only on the outer steel sleeve during installation*

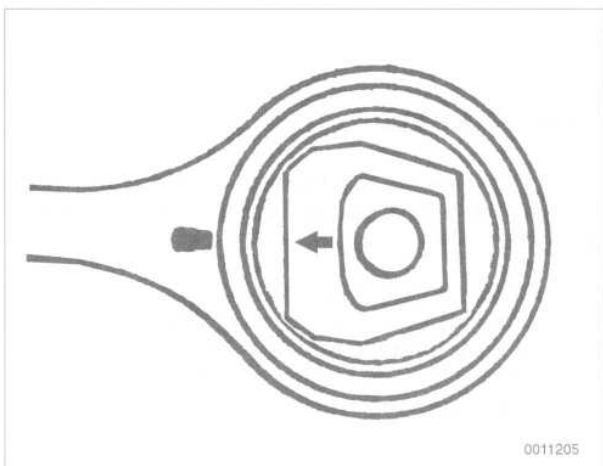

Fig. 16. Align arrow on bushing with mark on thrust arm when installing bushing.

5. Install the thrust arm as described earlier.

> ***CAUTION —***
> *Tighten the thrust arm bushing through-bolt to its final torque only with car on the ground and the suspension normally loaded as described earlier.*

SUBFRAME CROSSMEMBER

The subframe crossmember provides rigid mounting points for the engine, suspension, and steering components. The crossmember is not normally subject to wear and should only be replaced if structurally damaged.

Removing the subframe crossmember requires engine lifting equipment to support the weight of the engine so that the subframe can be removed from below.

> ***WARNING —***
> *Removal or replacement of the subframe crossmember may affect suspension and steering geometry, including front wheel alignment. Make appropriate matching marks during removal and be sure to have the front end professionally aligned after installation.*

To remove subframe crossmember

1. Using an engine hoist (BMW special tool no. 00 0 200 and 11 0 020), slightly raise the engine just until the weight of the engine is supported. See **110 Engine Removal and Installation**.

2. Working in the engine compartment, remove the top nut from the right engine mount.

3. Raise the car and remove the front wheels.

> ***WARNING —***
> *Make sure that the car and the engine are firmly supported on jack stands designed for the purpose. Place the jack stands beneath a structural chassis point. Do not place jack stands under suspension parts.*

4. Working beneath the car, remove the lower nuts from the left and right engine mounts. See Fig. 17.

5. Unbolt the left and right control arm through-bolts. Remove the bolts and support the control arm from the chassis using stiff wire.

> ***WARNING —***
> *Do not allow the control arm to hang from the ball joint. This can damage the ball joint.*



Fig. 17. Left lower engine mount (**arrow**).

6. Unbolt the steering gearbox from the subframe. See **320 Steering**. Suspend the gearbox from the body using stiff wire.

7. Unbolt the steering idler arm from the crossmember. See Fig. 18.



Fig. 18. Steering idler arm mounting bolt (**arrow**).

8. Using an appropriate jack, support the crossmember from below.

9. Unbolt the crossmember from the chassis on both sides. See Fig. 19.

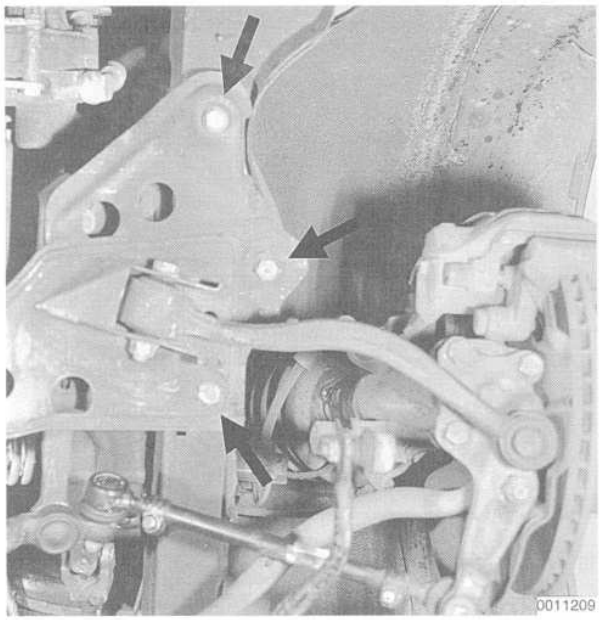

Fig. 19. Left side crossmember-to-chassis mounting bolts (**arrows**).

10. Slowly lower the crossmember, making sure all electrical leads and suspension components are clear during removal.

To install subframe crossmember

1. Make sure all bolts, bolt holes, and mating surfaces are clean to ensure proper tightening and alignment.

2. Using a jack, raise the crossmemember into position and install the mounting bolts.

Tightening Torques

- Subframe crossmember to chassis
  - M10-8.8 bolts . . . . . 42 Nm (31 ft-lb)
  - M10-9.8 bolts . . . . . 47 Nm (35 ft-lb)
  - M12 bolts . . . . . 77 Nm (57 ft-lb)

3. Install the idler arm and the steering gearbox to the crossmember using new self-locking nuts.

Tightening Torques

- Idler arm to subframe crossmember (self-locking nut)
  - M10 bolt. . . . . 42 Nm (32 ft-lb)
  - M12 bolt. . . . . 85 Nm (63 ft-lb)
- Steering gear box to subframe crossmember (self-locking nuts)
  - M10-10.9 bolts. . . . . 42 Nm (31 ft-lb)
  - M12 bolts. . . . . 80 Nm (59 ft-lb)

4. Install the control arms to the crossmember. Do not tighten the control arm through-bolts and new self-locking nuts to their final torque at this time.

5. Lower the engine onto the engine mounts, allowing it to settle fully before tightening the engine mount bolts.

Tightening Torque

- Engine mounts to engine bracket or main crossmember. . . . . 45 Nm (33 ft-lb)

6. Install the wheels and lower the car to the ground. Load the car to the normal loaded position as described earlier under **Ride Height** and tighten the control arm through-bolts.

Tightening Torque

- Control arm throughbolts to main crossmember (car in normal loaded position) . . . . . 78 Nm (57 ft-lb)

7. The rest of installation is the reverse of removal. When the job is completed have the wheels professionally aligned.

320 Steering and Wheel Alignment

GENERAL 320-1

STEERING WHEEL 320-1
To remove and install steering wheel (cars with SRS airbag) 320-1
To remove and install steering wheel (cars without SRS airbag) 320-2

POWER STEERING SYSTEM 320-3
To pressure test power steering pump 320-3
To remove and install power steering pump . . 320-3
To fill and bleed power steering system 320-4

STEERING GEAR AND LINKAGE 320-5
To remove and install steering gearbox 320-5
To remove and install steering idler arm 320-6
To remove and install outer tie rods 320-7
To replace tie rod ends 320-7
To replace center tie rod 320-8

WHEEL ALIGNMENT 320-8
Camber 320-8
Caster 320-8
Front Toe-in and Toe Difference Angle 320-9
Rear Toe-in 320-9
Wheel Alignment Specifications 320-9

TABLES

a. Front Wheel Alignment Specifications 320-10
b. Rear Wheel Alignment Specifications 320-10

320

GENERAL

This repair group covers servicing of the mechanical and hydraulic components of the steering system, including wheel alignment information.

The variable-assist power steering system consists of an engine-driven hydraulic pump, a recirculating ball type steering gearbox with integral hydraulic control valve, and connecting linkage to the road wheels.

At low speeds, maximum power assist is provided to ease parking and city driving. At high speeds, assist is reduced to ensure stability. The standard power steering system varies assist based on engine speed. The BMW Servotronic power steering system varies assist electronically based on road speed.

For information on steering column-mounted switches and the ignition lock see **612 Switches and Electrical Accessories**.

WARNING —

- *Do not reuse self-locking nuts. They are designed to be used only once and may fail if reused. Always replace them with new locking nuts.*
- *Do not install bolts and nuts coated with undercoating wax, as correct tightening torque cannot be assured. Always clean the threads with solvent before installation, or install new parts.*
- *Do not attempt to weld or straighten any steering components. Always replace damaged parts.*

STEERING WHEEL

Most BMW E34 cars are equipped with an SRS airbag mounted in the steering wheel. Improper handling of the airbag could cause serious injury. The airbag is an explosive device and should be treated with extreme caution.

WARNING —

- *The BMW Supplemental Restraint System (SRS) is complex. Special precautions must be observed when servicing. Serious injury may result if approved service procedures are not strictly adhered to.*
- *The SRS is equipped with a back-up power supply. A 10 minute waiting period should be observed after the battery has been disconnected. to allow the power supply to discharge.*

To remove and install steering wheel (cars with SRS airbag)

Use extreme caution when removing the airbag unit from the steering wheel and be sure to follow the airbag removal procedure as outlined in **721 Airbag System (SRS)**.

1. Make sure the front wheels are pointed straight ahead. Center the steering wheel.

2. Disconnect the negative (–) battery cable and cover the terminal with insulating material.

On 1992 and later cars, the battery is mounted beneath the rear seat.

3. Carefully remove the airbag from the front of the steering wheel. See **721 Airbag System (SRS)**. Store the airbag unit in a safe place.

> ***WARNING —***
> *Improper handling of the airbag could cause serious injury. Store the airbag with the horn pad facing up. If stored facing down, accidental deployment could propel it violently into the air, causing injury.*

4. Remove the steering wheel center nut (or bolt) and washer. Lightly punch mark or scribe the position of the steering wheel to the steering column shaft.

5. Unlock the steering wheel by turning the ignition key on. Remove the steering wheel.

> ***WARNING —***
> *The SRS contact reel is mounted to the rear of the steering wheel hub. The contact reel is a wound coil of wire that ensures continuous electrical contact for the air bag unit. Once the steering wheel mounting nut or bolt is removed the contact reel is locked in the center position and its position must not be altered. See Fig. 1.*

6. Install the steering wheel while aligning the matching marks. Make sure the locking pin engages the cutout in the contact reel. See Fig. 1.

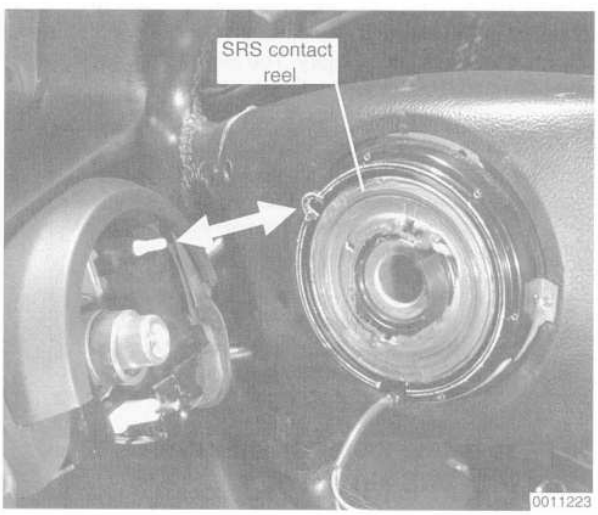

Fig. 1. Install steering wheel so that locking pin in column aligns with cutout in contact reel (**arrow**).

> ***CAUTION —***
> *Use a new self-locking nut on steering wheel. The nut is designed to be used only once.*

Tightening Torques

- Steering wheel to steering column spindle
  self-locking nut . . . . . 80 Nm (59 ft-lb)
  bolt. . . . . 63 Nm (46 ft-lb)

7. Install the airbag unit. See **721 Airbag System (SRS)**.

> ***WARNING —***
> *Once the airbag unit is installed and all other service procedures have been completed, start the engine and check that the SRS warning light goes out. If the warning light stays on, the SRS system will not function as designed. Have the system diagnosed and repaired by an authorized BMW dealer.*

To remove and install steering wheel (cars without SRS airbag)

1. Make sure that the front wheels are pointed straight ahead. Center the steering wheel.

2. Pry out the BMW emblem on the steering wheel horn pad.

3. Remove the steering wheel center nut (or bolt) and washer. Lightly punch mark or scribe the position of the steering wheel to the steering column shaft.

4. Unlock the steering wheel by turning the ignition key on. Remove the steering wheel.

5. Installation is the reverse of removal. Make sure the turn signal lever is in the center position before installing the wheel. Install the steering wheel while aligning the matching marks. Tighten the nut or bolt.

> ***CAUTION —***
> *Use a new self-locking nut on steering wheel. The nut is designed to be used only once.*

Tightening Torques

- Steering wheel to steering column spindle
  self-locking nut . . . . . 80 Nm (59 ft-lb)
  bolt. . . . . 63 Nm (46 ft-lb)

POWER STEERING SYSTEM

Power assist is provided by a belt-driven pump at the lower left-front of the engine. The power steering fluid reservoir is located at the left-front corner of the engine compartment.

NOTE —
Cars equipped with the self-levelling rear suspension system (called LAD) use the power steering pump to provide hydraulic pressure to the rear shock absorbers. See **330 Rear Suspension** *for additional information on the self-levelling rear suspension system.*

To pressure test power steering pump

Testing power steering system pressure requires a 0–150 bar (0–2000 psi) pressure gauge with a shut-off valve and the correct fittings. Make sure the steering pump drive belt is in good condition and properly adjusted before making the test.

1. Connect the pressure gauge in the high pressure line between the pump and the gearbox. See Fig. 2.

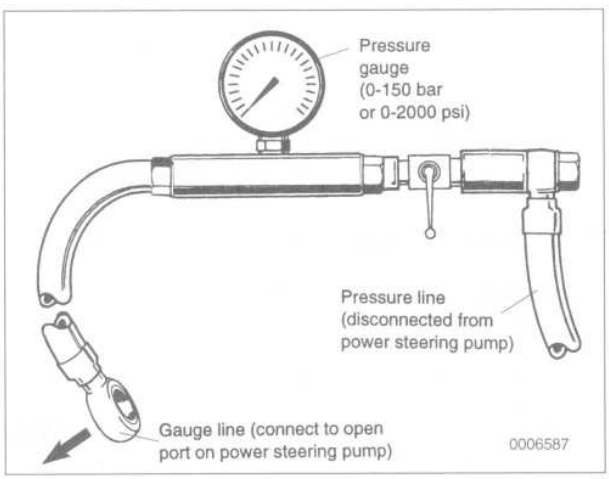

Fig. 2. Pressure gauge setup for testing power steering pump pressure.

NOTE —
On cars equipped with the self-levelling suspension system (called LAD), be sure to connect the gauge to the power steering part of the pump. The power steering output line should lead directly to the steering gearbox.

2. Center the steering wheel with the front wheels pointing straight ahead.
3. Start the engine and let it idle.

WARNING —
Only run the car in a well-ventilated area. Exhaust fumes can be fatal.

4. Close the gauge valve for no more than ten seconds, note the pump output pressure, then reopen the valve. If the pressure gauge reading is not within the range listed below, the pump should be replaced.

CAUTION —
Do not close the pressure valve for more than 10 seconds. High pressure could damage the seals in the pump or steering gearbox.

Power steering pump
- System pressure. . . . 130 ± 13 bar (1885 ± 188.5 psi)

5. Working beneath the car, insert a piece of wood at the idler arm to block the steering from reaching full lock (about $^1/_2$ turn before full lock).
6. Start the car and have a helper turn the steering wheel to the right until the idler arm contacts the block. Hold the wheel against the stop for about 5 seconds. Record the pressure.
7. Repeat procedures 5 and 6 above for the left side.

At each wheel lock position, the system pressure should fall within the range specified above. Low pressure indicates internal leaks in the steering gearbox. High pressure indicates a faulty power steering pump.

When finished testing, remove the pressure gauge and install the fluid hose to the pump using a new sealing washer. Take care not to overtorque the banjo bolt. Fill and bleed the power steering system as described below.

Tightening Torques
- Hydraulic hose to power steering pump
  M14 banjo bolt. . . . . 35 Nm (26 ft-lb)
  M16 banjo bolt. . . . . 40 Nm (30 ft-lb)

To remove and install power steering pump

1. Empty the power steering fluid reservoir using a clean syringe. Do not reuse the fluid.
2. Raise the front of the car.

WARNING —
Make sure that the car is firmly supported on jack stands designed for the purpose. Place the jack stands beneath a structural chassis point. Do not place jack stands under suspension parts.

3. Remove the fluid hoses from the pump. Plug the openings in the pump and in the hose ends.

NOTE —
On cars equipped with the self-levelling suspension system (called LAD), the power steering/LAD pump is mounted with some additional brackets, spacers, and fluid lines. Note the installed position of these components during removal.

4. Remove the power steering pump drive belt. See **020 Maintenance Program**.

5. Remove the pump mounting bolts and remove the pump. See Fig. 3.



Fig. 3. Power steering pump mounting bolts (**arrows**) on M20 engine. Other pump mountings similar.

6. Make sure all thread bores, bolts, nuts, fluid couplings and mating surfaces are clean.

7. Mount the pump using new self-locking nuts.

Tightening Torque
- Power steering pump to bracket (self-locking nuts) . . . . . 22 Nm (16 ft-lb)

8. On engines with standard V-belts, tension the belt as follows:
   - Loosen pump mounting bolts.
   - Use torque wrench on toothed adjuster and adjust belt so wrench reads 8 Nm (71 in.-lb).
   - Tighten pump mounting bolts.

9. On engines with a single poly V-belt, install the belt to the pulleys and release the tensioner.

Tightening Torque
- Power steering pump bracket to engine block or oil pan (self-locking nuts) . . . 22 Nm (16 ft-lb)

10. Install the power steering fluid hoses to the pump. Make sure the hoses have adequate clearance from the chassis. Do not overtorque the banjo bolts. Use new sealing washers.

Tightening Torques
- Hydraulic hoses to power steering pump
  M14 banjo bolts . . . . . 35 Nm (26 ft-lb)
  M16 banjo bolts . . . . . 40 Nm (30 ft-lb)

11. The remainder of installation is the reverse of removal. Fill and bleed the power steering system as described below.

To fill and bleed power steering system

1. With the engine off, fill the power steering fluid reservoir with clean fluid.
   - **reservoir with dipstick**: fill level to the "MAX" mark on dipstick.
   - **reservoir without dipstick (cars with LAD)**: fill level to approximately 25 mm (1 in.) below the reservoir rim.

NOTE —
The power steering systems used on the E34 cars use one of two types of fluid; automatic transmission fluid (ATF) or CHF 7.1 hydraulic fluid. Check the power steering system reservoir for a label identifying the type of fluid used.

Power steering system capacity
- Without self-leveling rear suspension (LAD) . . . . . 1.2 ltr (1.3 qt)
- With self-leveling rear suspension (LAD) . . . . . 1.8 ltr (1.9 qt)

2. Start the engine. Then slowly turn the steering wheel from lock to lock two times.

3. Turn the engine off and check the fluid level, adding fluid if necessary.

4. On cars with self-levelling rear suspension (LAD), raise the rear of the car until the drive wheels are off the ground. Wait two minutes and check the fluid level. The level should be no more than 25 mm (1.0 in.) above the base of the reservoir screen. Correct the level as necessary.

NOTE —
To identify cars with LAD, see **330 Rear Suspension**.

STEERING GEAR AND LINKAGE

The steering gear and linkage require no maintenance other than alignment and a periodic inspection for worn components.

To remove and install steering gearbox

1. Empty the power steering fluid reservoir using a clean syringe. Do not reuse the fluid.

2. On cars with SRS, remove the airbag unit from the steering wheel. See **721Airbag System (SRS)**.

> *WARNING —*
> *Improper handling of the SRS airbag could cause serious injury. The airbag is an explosive device and should be treated with extreme caution.*

3. Raise the front of the car.

> *WARNING —*
> *Make sure the car is firmly supported on jack stands designed for the purpose. Place the jack stands beneath a structural chassis point. Do not place jack stands under suspension parts.*

4. Remove the center tie rod self-locking nut at the pitman arm. See Fig. 4. Then using a press (BMW special tool no. 32 2 040 or equivalent), remove the tie rod from the pitman arm.

5. Remove the lower steering column universal joint clamping bolts and push the universal joint up off of the steering gearbox shaft. See Fig. 5.

6. On Servotronic-equipped cars, disconnect the harness connector for the electronic/hydraulic converter at the bottom of the steering gearbox.

7. Working in the engine compartment, remove the fluid hoses from the top of the steering gearbox. Then remove the steering gearbox mounting bolts and remove the gearbox from below. See Fig. 6.

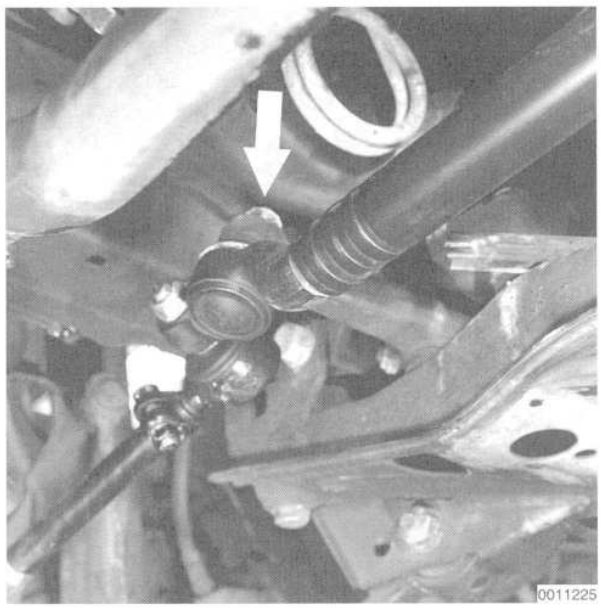

Fig. 4. Center tie rod to pitman arm nut (**arrow**). Discard self-locking nut.

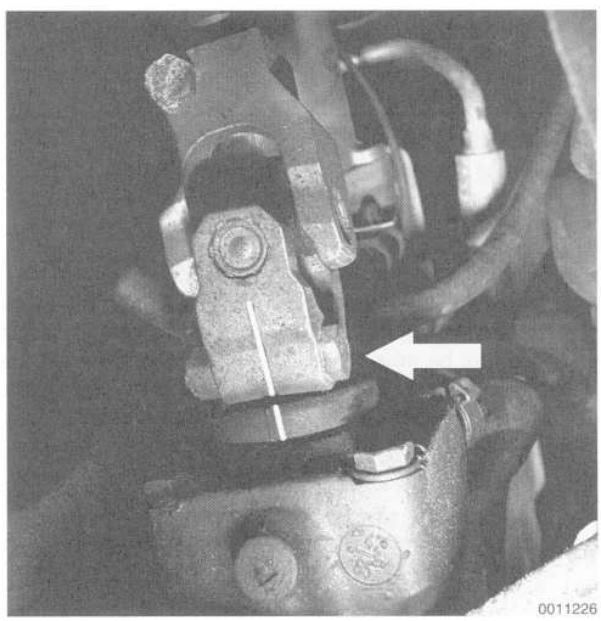

Fig. 5. Universal joint lower clamping bolt (**arrow**).

> *CAUTION —*
> *Plug the openings in the pump and hose ends to prevent dirt from entering the hydraulic system.*

NOTE —
It may be necessary to remove the air filter housing or other components to gain access to the steering gearbox.

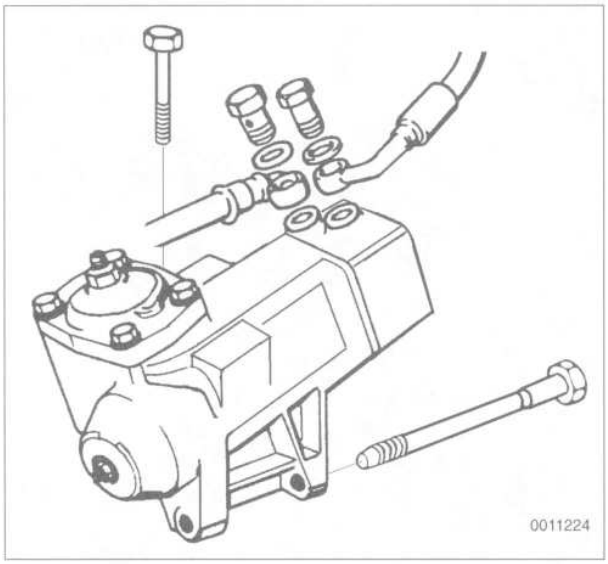

Fig. 6. Fluid hoses and mounting bolts at steering gearbox.

8. Make sure all thread bores, bolts, nuts, splines and mating surfaces are clean.

9. Install the steering gearbox to the subframe crossmember using new self-locking nuts.

Tightening Torques

- Steering gearbox to subframe crossmember
  M10 bolt (class 10.9 bolt only) . . . . . 42 Nm (32 ft-lb)
  M12 bolt . . . . . 85 Nm (63 ft-lb)

10. Install the steering column universal joint to the steering gearbox shaft. Center the steering column to the gearbox by aligning the universal joint split with the mark on the steering gearbox. See Fig. 5 given earlier. Use a new self-locking nut on the clamping bolt.

NOTE —

Make sure the clamping bolt fits into the machined groove in the steering gearbox shaft when mating the universal joint to the shaft.

Tightening Torque

- Steering column universal joint to steering gearbox shaft (self-locking nut) . . . . . 22 Nm (16 ft-lb)

11. Install the center tie rod to the pitman arm using a new self-locking nut.

Tightening Torque

- Center tie rod to pitman arm. . . . . 59 Nm (44 ft-lb)

12. On Servotronic-equipped cars connect the harness connector for the electronic/hydraulic converter.

13. Connect the fluid hoses to the steering gearbox. Use new sealing washers at the couplings and make sure not to overtorque the banjo bolts.

Tightening Torques

- Hydraulic fluid hoses to steering gearbox
  M14 banjo bolt. . . . . 35 Nm (26 ft-lb)
  M16 banjo bolt. . . . . 40 Nm (30 ft-lb)

14. On SRS-equipped cars install the airbag unit. See **721 Airbag System (SRS)**.

15. Fill and bleed the power steering system as described above.

To remove and install steering idler arm

The idler arm is bolted to the subframe crossmember through a bushing. The bushing is subject to wear and is available as a replacement part. See Fig. 7.

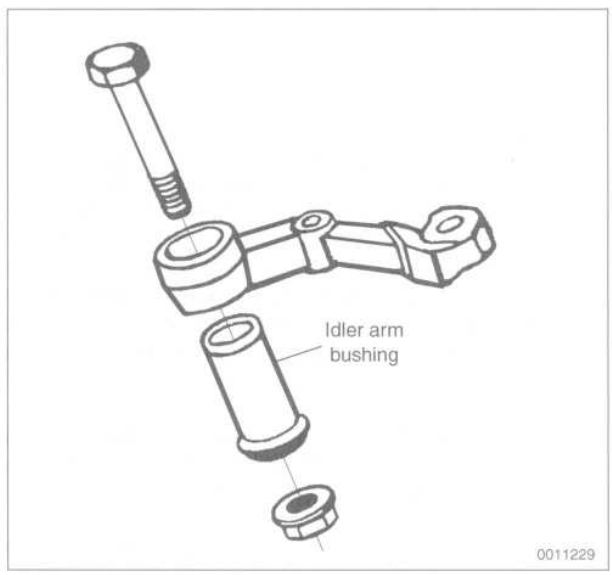

Fig. 7. Idler arm and bushing.

1. Raise the front of the car.

WARNING —
Make sure the car is firmly supported on jack stands designed for the purpose. Place the jack stands beneath a structural chassis point. Do not place jack stands under suspension parts.

2. Remove the center tie rod self-locking nut at the idler arm. Then using a press (BMW special tool no. 32 2 040 or equivalent), remove the tie rod end from the idler arm. See Fig. 8.



Fig. 8. Idler arm-to-center tie rod self-locking nut (**arrow**).

3. Remove the idler arm mounting bolt and remove the arm from the car.

4. If replacing the idler arm bushing, press it out using a press (use BMW special tool nos. 32 1 050 and 32 2 032 or equivalent press fittings). Be sure to press the new bushing in from the direction shown in Fig. 7.

5. Installation is the reverse of removal. Make sure all thread bores, bolts, nuts, and mating surfaces are clean. Use new self-locking nuts to mount the idler arm to the subframe crossmember and the center tie rod to the idler arm. Have the car professionally aligned.

Tightening Torques

- Idler arm to subframe crossmember
  M10 bolt . . . . . 42 Nm (32 ft-lb)
  M12 bolt . . . . . 85 Nm (63 ft-lb)
- Center tie rod to idler arm . . . . . 37 Nm (28 ft-lb)

To remove and install outer tie rods

1. Raise the front of the car.

WARNING —
Make sure the car is firmly supported on jack stands designed for the purpose. Place the jack stands beneath a structural chassis point. Do not place jack stands under suspension parts.

2. If replacing the tie rod or tie rod ends, measure the overall length of the complete installed tie rod assembly. Record the measurement.

NOTE —
Accurate measuring of the tie rod assembly will help to approximate wheel alignment when new parts are installed.

3. Remove the tie rod end ball joint nuts and press the tie rod ball joints off using a press (BMW special tool no. 32 2 050 or equivalent).

4. Installation is the reverse of removal. Make sure all thread bores, bolts, nuts, and mating surfaces are clean. Use new self-locking nuts on both tie rod end ball joints. Have the car professionally aligned.

Tightening Torque

- Tie rod end to steering arm
  or center tie rod . . . . . 37 Nm (28 ft-lb)

To replace tie rod ends

1. Raise the car and press off the tie rod end ball joint as described above.

2. Make a reference measurement of the tie rod end to the tie rod. Record the measurement.

NOTE —
Accurate measuring of the tie rod end in reference to the tie rod will help to approximate wheel alignment when new parts are installed.

3. Loosen the tie rod end clamping bolt and thread out the tie rod end. Count the number of turns as the end is removed.

4. Installation is the reverse of removal. Make sure all threaded parts are clean. Use new self-locking nuts on the tie rod end and the tie rod clamping bolt. Have the car professionally aligned.

CAUTION —
Always use new self-locking nuts. They are designed to be used only once and may fail if reused.

Tightening Torques
- Tie rod end clamping bolt . . . . . 14 Nm (10 ft-lb)
- Tie rod end to steering arm or center tie rod . . . . . 37 Nm (28 ft-lb)

To replace center tie rod

1. Raise the front of the car.

WARNING —
Make sure that the car is firmly supported on jack stands designed for the purpose. Place the jack stands beneath a structural chassis point. Do not place jack stands under suspension parts.

2. Remove the self-locking nuts connecting the center tie rod to the outer tie rods, the pitman arm, and the idler arm. See Fig. 9.

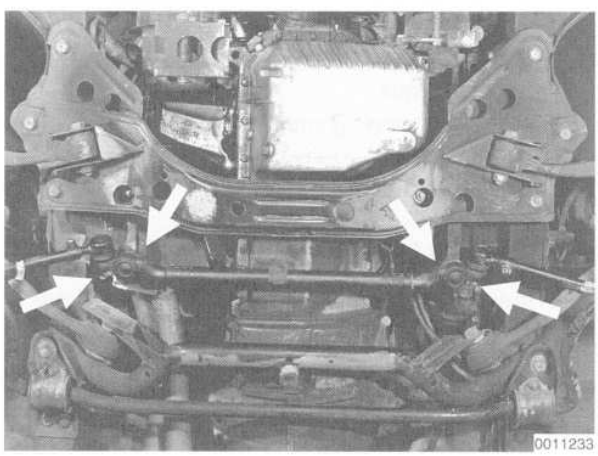

Fig. 9. Center tie rod self-locking nuts (arrows) to be removed.

3. Press the outer tie rod ends off the center tie rod using a press (BMW special tool no. 32 2 050 or equivalent).

4. Press the center tie rod off the pitman arm and the idler arm using a press (BMW special tool no. 32 2 040 or equivalent).

5. Installation is the reverse of removal. Make sure all threaded parts are clean. Replace all self-locking nuts. Check the tie rod end ball joints and idler arm bushing for wear. Have the car professionally aligned.

Tightening Torques
- Center tie rod to outer tie rod ends . . . 37 Nm (28 ft-lb)
- Center tie rod to pitman arm . . . . . 59 Nm (44 ft-lb)
- Center tie rod to idler arm . . . . . 37 Nm (28 ft-lb)

WHEEL ALIGNMENT

Proper handling, stability, and driving ease depend upon the correct alignment of all four wheels. The front axle is aligned in relation to the rear axle, then the front wheels are aligned in relation to one another.

BMW E34 cars use a sophisticated multi-link suspension at the front and rear of the car. Proper alignment requires computerized alignment equipment.

Camber

Front and rear camber are fixed by the design of the car, but some front camber adjustments can be made by replacing the strut upper mounts with special offset mounts available from BMW. See Fig. 10. Offset strut mounts can correct camber up to ± 30'.

NOTE —
Front upper strut mount replacement is covered in **310 Front Suspension**.

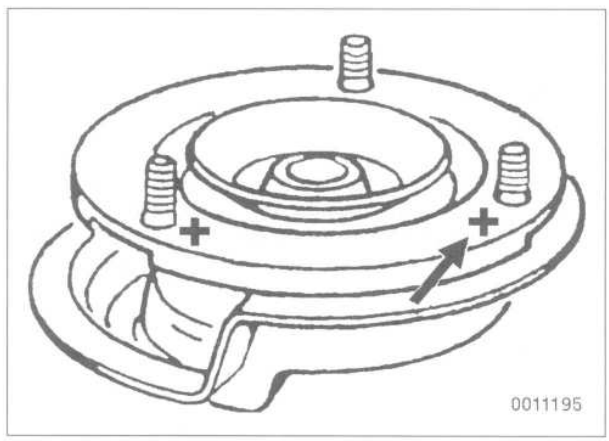

Fig. 10. Special corrective upper strut mount can be identified by a + or - stamped on the mount.

Caster

Front and rear caster is fixed by the design of the car and deviations are usually the result of worn or damaged suspension or body parts.

Check the control arms and thrust arms (including bushings) for wear, damage, and deformation if front caster problems are present. Check the trailing arms, rear axle subframe and thrust arms if rear caster problems are present.

Front Toe-in and Toe Difference Angle

Toe-in is the difference in the distance between the front of the front wheels and the rear of the front wheels. It is adjusted by altering the length of the outer tie rods.

Toe-in adjustments should only be made on specialized alignment equipment and only with the car in normal loaded position as described below under **Wheel Alignment Specifications**.

Toe difference angle determines the progressively different paths taken by the front wheels as the car is turning. It is fixed by the idler arm, but depends on accurate setting of the toe-in.

Rear Toe-in

There is no provision for routine rear wheel toe-in adjustment. Some correction is possible where rear wheel toe-in falls outside of the allowable limits.

The correction is made by removing the trailing arm and replacing the outer trailing arm pivot bushing with an eccentric version. The eccentric bushing repositions the trailing arm slightly, resulting in a toe-in change.

The eccentric bushings are marked indicating increments of change and can be installed in any position to produce a specific amount of toe correction.

NOTE —
Trailing arm bushing replacement is covered in **330 Rear Suspension.**

Before installing corrective trailing arm bushings, inspect the rear springs and other bushings and flexible mounts in the rear suspension and replace as necessary. This may correct the problem.

Wheel Alignment Specifications

Alignment specifications for all models covered by this manual are listed in **Table a** and **Table b**. The specifications only apply under the following conditions:

- Correct wheels and tires are installed, in good condition, at the correct inflation pressures.
- Wheel bearings are in good condition.
- Ride height is in accordance with specifications. See **310 Front Suspension** and **330 Rear Suspension**.
- Car is in normal loaded position.

Normal loaded position

- Each front seat . . . . . 68 kg (150 lb)
- Center of rear seat . . . . . 68 kg (150 lb)
- Trunk . . . . . 21 kg (46 lb)
- Fuel tank . . . . . full

Table a. Front Wheel Alignment Specifications

	base suspension	Sport suspension	M-Technic suspension
Toe angle (total)	0° 18'± 5'	0° 18'± 5'	0° 18'± 5'
toe difference angle (inside wheel @ 20° lock)	–1° 50'±30'	–2° 4' ± 30'	–2° 10' ± 30'
Camber	–13'±30'	–30'±30'	–28'±30'
Caster			
@ 10° wheel lock	7° 53'±30'	8° 8'±30'	8° 13'±30'
@ 20° wheel lock	8° 8'±30'	8° 26'±30'	8° 28'±30'
maximum permissible difference between sides	30'	30'	30'
Kingpin Inclination			
@ 10° wheel lock	12° 4'±30	12° 37'±30	12° 41'±30
@ 20° wheel lock	12° 4'±30	12° 38'±30	12° 41'±30
Front Wheel Displacement	0±15'	0±15'	0±15'
Full lock			
inside wheel (approximate)	41°	41°	43°
outside wheel (approximate)	32°	32°	33°
Turning circle diameter	11 m (35.7 ft.)	11 m (35.7 ft.)	11 m (35.7 ft.)

Table b. Rear Wheel Alignment Specifications

	base suspension	Sport suspension (touring)	M-Technic suspension
Toe angle (total)	0° 25'± 7'	0° 28'± 7' (0° 29'± 7')	0° 21'± 7'
Axis deviation (allowable range)	0±15'	0±15'	0±15'
Camber	–2° 20'± 30'	–2° 35'± 30' (–2° 45'± 30')	–2° 50'± 30'
maximum allowable deviation between sides	30'	30'	30'

330 Rear Suspension

GENERAL 330-1

RIDE HEIGHT 330-1

SHOCK ABSORBERS AND SPRINGS . . . 330-3
To remove and install strut assembly 330-3
To disassemble and assemble strut 330-4

REAR WHEEL BEARINGS 330-5
To replace rear wheel bearing 330-5

DRIVE AXLES 330-7
To remove and install drive axle 330-7
To replace CV joint and joint boot 330-7

TRAILING ARMS 330-8
To remove and install trailing arm 330-8
To replace trailing arm bushings 330-10

SELF-LEVELLING SUSPENSION (LAD) 330-10
To pressure test LAD system 330-11
To adjust ride height (cars with LAD) 330-11
To fill and bleed LAD system 330-12
To replace LAD regulator valve 330-13
To replace LAD fluid accumulator 330-13

TABLES

Table a. Rear Ride Height Specifications 330-2

GENERAL

The BMW E34 5-Series independent rear suspension is shown in Fig. 1. For a general description of the rear suspension, see **300 Suspension, Steering and Brakes—General.**

Special service tools are required for most of the work described in this repair group. Read the procedures through before beginning any job.

NOTE —

- *Service and repair information on the final drive unit can be found in* **331 Final Drive.**
- *General suspension and steering troubleshooting can be found in* **300 Suspension, Steering, and Brakes—General**.

Some models are equipped with a self-levelling rear suspension system called LAD (Load Absorption Dampening). The LAD system monitors and automatically adjust the rear suspension ride height based on load and driving conditions. The system is in operation whenever the engine is running and the vehicle load is changed. For more information on the LAD system, including how to identify cars equipped with LAD, see **Self-levelling Suspension (LAD)** given later in this repair group.

WARNING —

Do not reuse self-locking nuts. They are designed to be used only once and may fail if reused. Always replace them with new self-locking nuts.

WARNING —

- *Personal injury may result if procedures described here are undertaken without the proper service tools and equipment. Be sure to have the right tools on hand before beginning the job.*
- *Do not install bolts and nuts coated with undercoating wax, as correct tightening torque cannot be assured. Always clean the threads with solvent before installation, or install new parts.*
- *Do not attempt to weld or straighten any suspension components. Replace damaged parts.*

RIDE HEIGHT

Rear suspension ride height is controlled by the rear springs. If the rear ride height is not within the specifications listed in Table a, the rear springs should be replaced.

NOTE —

On LAD-equipped cars, rear ride height is also controlled by the LAD hydraulic system. For information on adjusting rear ride height on LAD-equipped cars see **Self-levelling Suspension (LAD)**.

Ride height is measured from the lower edge of the wheel arch to the bottom edge of the wheel rim. See Fig. 2.

Table a lists rear suspension ride height specifications. These specifications apply to a car in a normally loaded position, simulating a load of passengers, luggage and fuel. When checking ride height or installing suspension components that require the car to be "normally loaded," load the car as follows:

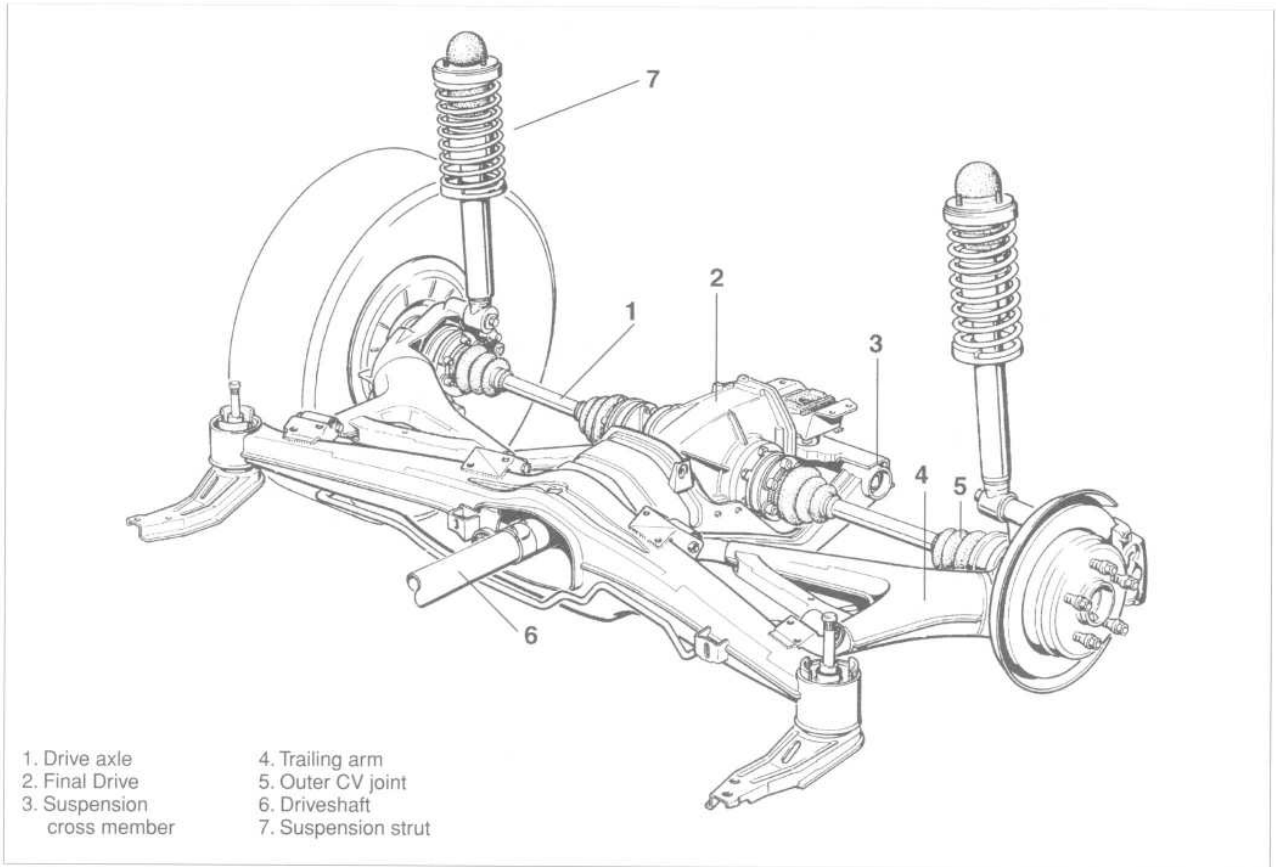

Fig. 1. Rear suspension.

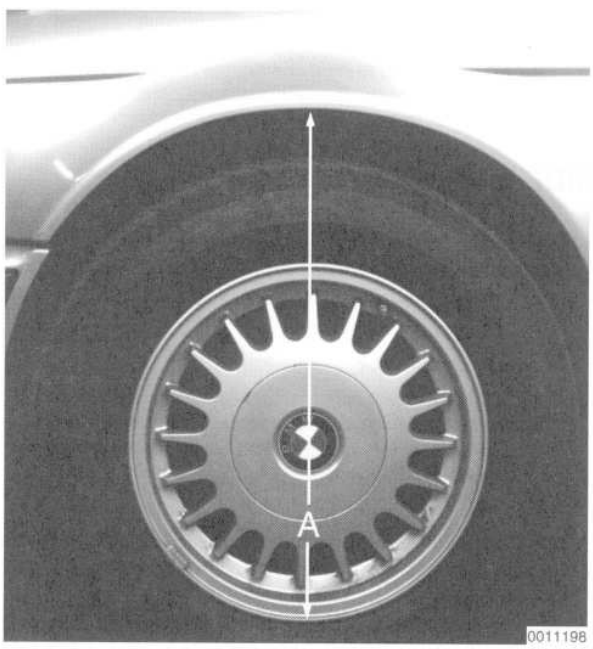

Fig. 2. Ride height measurement (**A**) is taken from center of wheel arch to bottom of wheel rim. Measure ride height with car in normal loaded position on the ground.

RIDE HEIGHT

Normal loaded position

- Each front seat . . . . . .68 kg (150 lb)
- Center of rear seat . . . . . .68 kg (150 lb)
- Trunk . . . . . .21 kg (46 lb)
- Fuel tank. . . . . full

Table a. Rear Ride Height Specifications

Wheel installed	sedan	touring
15 in. rims		
standard	522 mm (20 1/2 in.)	522 mm (20 1/2 in.)
Sport	513 mm (20 1/4 in.)	507 mm (20 in.)
M-Technic	512 mm (20 1/4 in.)	NA
TRX 390 rims		
standard	526 mm (20 3/4 in.)	526 mm (20 3/4 in.)
Sport	517 mm (20 3/8 in.)	511 mm (20 1/8 in.)
M-Technic	516 mm (20 3/8 in.)	NA
TRX 415 rims		
standard	536 mm (21 1/8 in)	536 mm (21 1/8 in)
Sport	527 mm (20 3/4 in)	521 mm (20 1/2 in)
M-Technic	526 mm (20 3/4 in)	NA

SHOCK ABSORBERS AND SPRINGS

Shock absorber cartridges and springs should always be replaced in pairs.

To remove and install strut assembly

1. Raise the car and remove the rear wheel.

> ***WARNING —***
> *Make sure that the car is firmly supported on jack stands designed for the purpose. Place the jack stands beneath a structural chassis point. Do not place jack stands under suspension parts.*

2. On LAD-equipped cars, place a drain pan beneath the pressure regulating valve on the driver's side of the axle subframe. Loosen the valve's bleeder screw and allow the hydraulic pressure to discharge. See Fig. 3.

> ***CAUTION —***
> *Clean the area around the bleeder screw and the hydraulic fittings on the struts before opening the LAD system.*

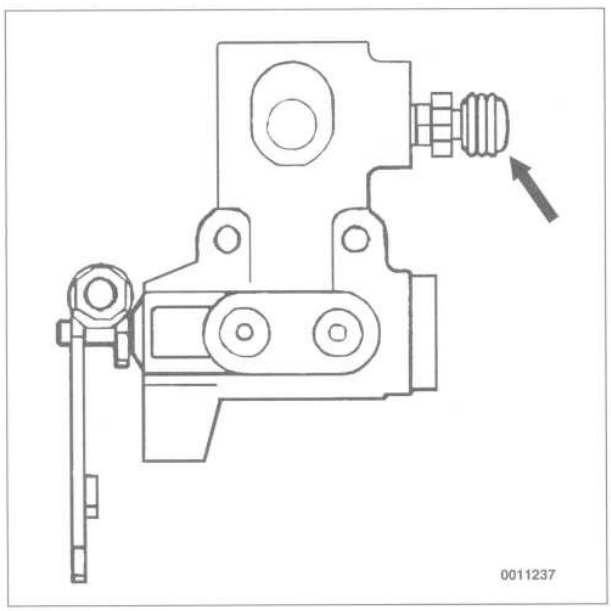

Fig. 3. LAD pressure regulating valve bleeder screw (**arrow**). The regulating valve is located on the driver's side of the rear axle subframe.

3. On LAD-equipped cars, place the drain pan beneath the strut and remove the hydraulic line from the lower section of the strut.

4. Support the trailing arm from below.

5. Remove the rear seat cushion and backrest. See **520 Seats**. Then remove the trim panel covering the strut tower. Remove the rubber cap from the strut.

6. Remove the strut upper mounting nuts. See Fig. 4.

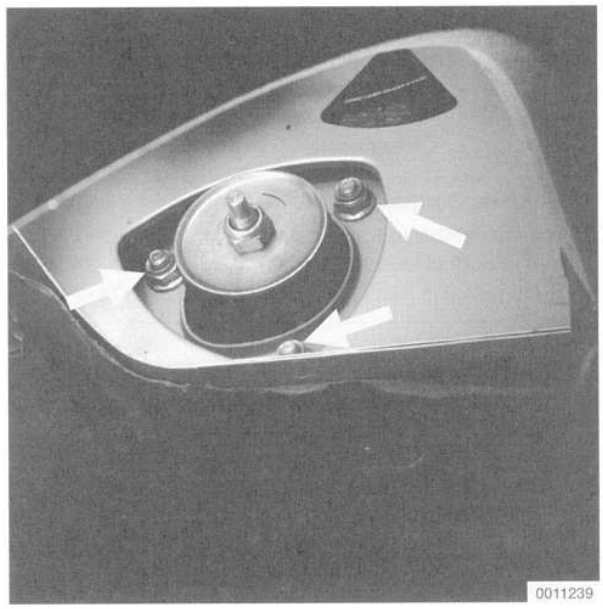

Fig. 4. Rear strut upper mounting nuts (**arrows**).

7. Working beneath the car, remove the lower strut mounting bolt and remove the strut assembly.

> ***NOTE —***
> *Store the removed strut assembly upright. Do not allow it to lie horizontally or upside-down for any length of time. If incorrect storage has occurred, place the strut assembly upright with the rod fully extended for at least 24 hours.*

8. Make sure all thread bores, bolts, nuts and mating surfaces are clean.

9. Install the strut assembly into the strut tower using a new upper mounting gasket and new self-locking nuts.

Tightening torques

- Strut assembly to body (self-locking nuts) . . . . . 22 Nm (16 ft-lb)

10. Install the strut assembly to the trailing arm but do not tighten it to its final torque.

11. On LAD-equipped cars install the hydraulic fluid line to the strut.

Tightening Torque

- Hydraulic fluid line to strut assembly . . . . . 14 Nm (10 ft-lb)

12. Install the road wheel and lower the car. Load the car to the normal loaded position as described in **Ride Height.** Tighten the lower strut mounting bolt.

Tightening Torques

- Strut assembly to trailing arm (car in normal loaded position). . . . . 127 Nm (94 ft-lb)
- Road wheel to hub . . . . . 100±10 Nm (74±7 ft-lb)

13. On LAD-equipped cars fill and bleed the LAD system as described below under **Self-levelling Suspension (LAD).**

14. The remainder of installation is the reverse of removal.

To disassemble and assemble strut

Replacing the upper strut mount, spring, and strut cartridge requires that the strut first be disassembled. This procedure requires a spring compressor specifically designed for the purpose. Fig. 5 shows the rear strut assembly.

> ***WARNING —***
> *Do not attempt to disassemble the struts without a spring compressor designed specifically for this job*

1. Remove the strut assembly from the car as described above.

2. Using a spring compressor, compress the spring until the spring force on the upper mount is relieved.

> ***WARNING —***
> *Make sure the spring compressor grabs the spring properly before compressing it.*

3. Pry the protective cap off the top of the strut assembly, then remove the top (center) nut and washer.

4. Release the spring compressor carefully and evenly, allowing the spring to slowly expand.

5. Remove the spring from the shock absorber.

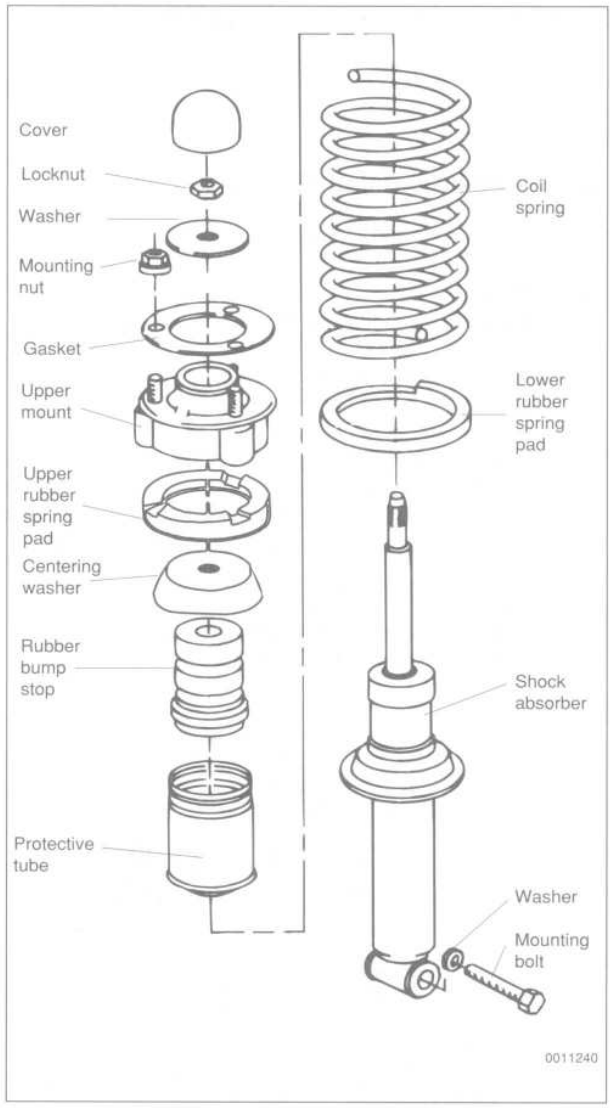

Fig. 5. Exploded view of rear strut assembly.

> ***NOTE —***
> *Store the removed shock absorber upright. Do not allow it to lay horizontally or upside-down for any length of time. If incorrect storage has occurred, place the shock absorber upright with the rod fully extended for at least 24 hours.*

6. Compress the spring and install it and related components to the shock absorber, using Fig. 5 as a guide. Use a new self-locking top (center) nut.

> ***WARNING —***
> *Make sure the self-locking top nut is fully tightened before releasing the spring compressor.*

Tightening Torque

- Upper strut mount to shock absorber shaft (self-locking nut) . . . . . 25 Nm (18 ft-lb)

7. Release the spring compressor slowly, making sure that the spring ends seat in the shoulders of the spring seats. Install the strut assembly as described above.

REAR WHEEL BEARINGS

The wheel bearing is pressed into the trailing arm and secured with a large circlip. The stub axle is pressed into the bearing and held in place by the drive flange collar nut. See Fig. 6.

Special press tools are required to replace the wheel bearings. Read the procedure through before beginning the job.

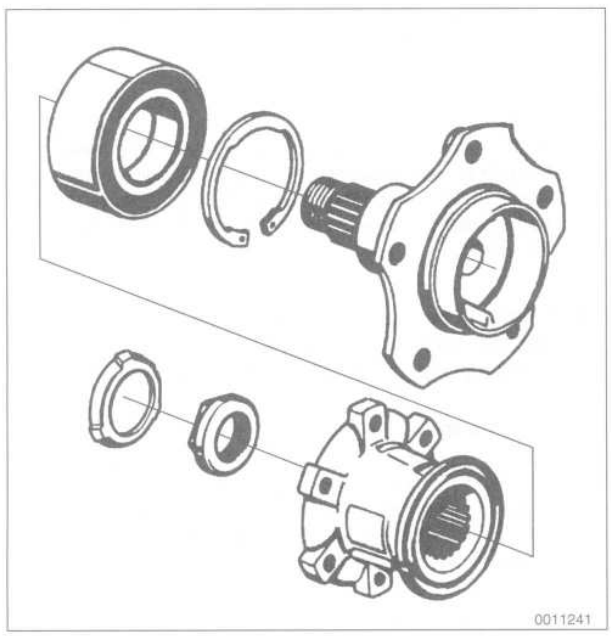

Fig. 6. Rear wheel bearing assembly.

To replace rear wheel bearing

1. Raise the car.

> ***WARNING —***
> *Make sure that the car is firmly supported on jack stands designed for the purpose. Place the jack stands beneath a structural chassis point. Do not place jack stands under suspension parts.*

2. Remove the drive axle outer CV joint from the wheel drive flange as described below under **Drive Axles.** Support the drive axle from the chassis with wire.

3. Pry the lockplate off the drive flange collar nut. See Fig. 7.

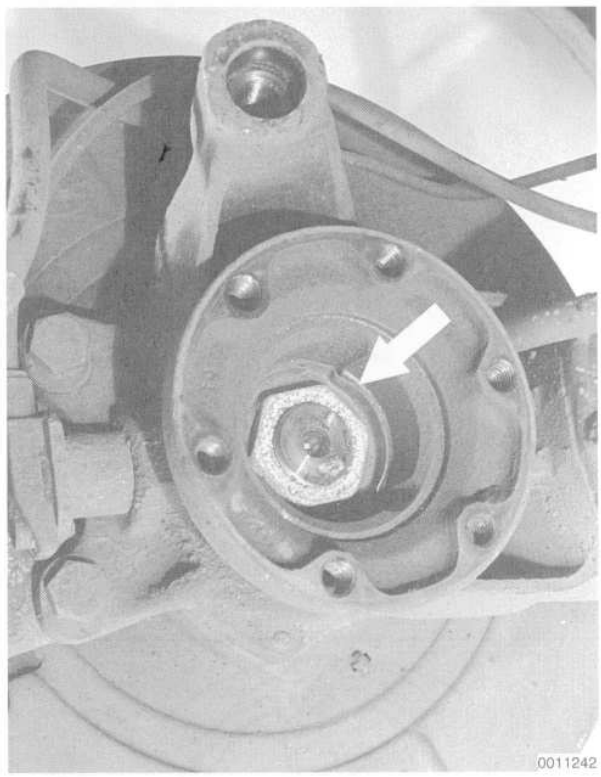

Fig. 7. Drive flange collar nut and lockplate (**arrow**).

4. Lower the car to the ground. Apply the parking brake to prevent the wheel from turning. Loosen, but do not remove the drive flange collar nut.

5. Raise the car and remove the wheel.

6. Remove the brake caliper assembly and rotor as described in **340 Brakes**. Leave the brake hose connected to the caliper. Suspend the caliper assembly from the chassis with wire.

7. Remove the ABS pulse sensor. See Fig. 8.

8. Remove the drive flange collar nut and remove the flange using a puller if necessary. See Fig. 9.

9. Remove the large circlip from the trailing arm bearing housing. See Fig. 6.

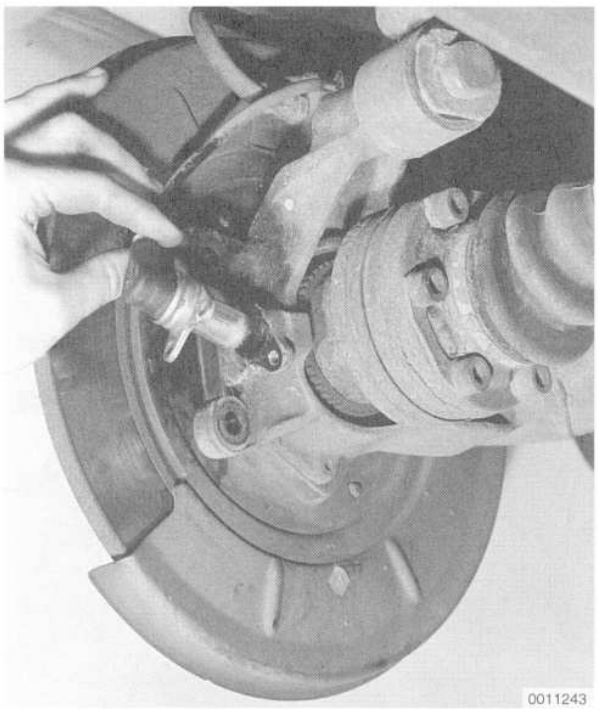

Fig. 8. ABS pulse sensor being removed.

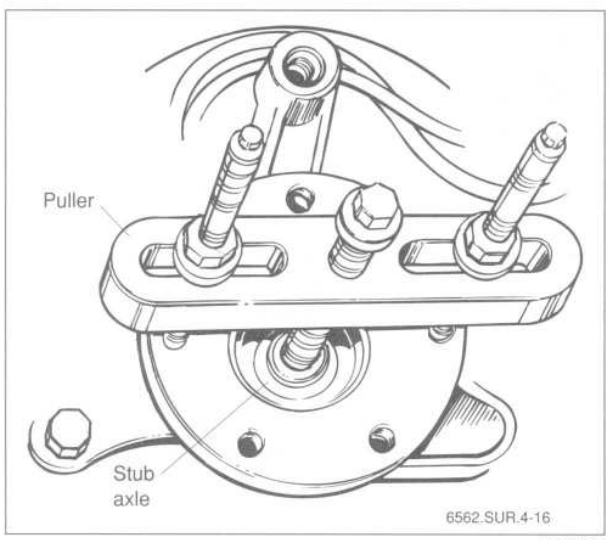

Fig. 9. Drive flange being removed from stub axle using puller.

10. With the drive flange removed, thread the drive flange collar nut back onto the stub axle until it is flush with the end of the axle. Using a soft-faced hammer, tap the stub axle out of the bearing.

11. If necessary, use a puller to remove the bearing inner race from the stub axle.

12. Remove the bearing from the trailing arm using a puller. (BMW special tool nos. 33 4 031, 33 4 033, and 33 4 038 or equivalents).

13. Clean the trailing arm bearing housing thoroughly. Make sure all thread bores, bolts, nuts and mating surfaces are clean.

14. Install the new wheel bearing into the trailing arm using a press (BMW special tool nos. 33 4 030, 33 4 036, and 33 4 037 or the equivalents). Apply force only to the outer race when pressing in the bearing. Install a new circlip.

> ***CAUTION —***
> *Make sure that the bearing is pressed in far enough to contact the shoulder at the back side of the housing and that the circlip is fully seated in its groove.*

15. Draw the stub axle into the bearing using a puller (BMW special tool nos. 33 4 080, and 33 4 020 or equivalents). Support the bearing inner race when installing the stub axle.

> ***NOTE —***
> *BMW specifies special tools to pull the stub axle through the wheel bearing into position. If using alternative tools to install the axle, be sure to support the bearing inner race when pressing or pulling the axle into place.*

16. Lightly oil the bearing surface of the drive flange collar nut and install it to the drive flange. Tighten the collar nut firmly, but do not fully tighten it at this time.

> ***WARNING —***
> *For safety reasons, the axle collar nut should only be tightened to its final torque with the wheel installed and the car lowered to the ground. However, loading the bearing without the nut tightened sufficiently may damage the bearing.*

17. Install the brake rotor and caliper as described in **340 Brakes**. Install the ABS sensor. Install the road wheel.

Tightening Torques

- Brake rotor to drive flange . . . . . 16 Nm (12 ft-lb)
- Brake caliper to trailing arm . . . . . 67 Nm (50 ft-lb)

18. Lower the car to the ground. Apply the parking brake to prevent the wheel from turning. Tighten the drive flange collar nut to its final torque.

Tightening Torque

- Drive flange collar nut to wheel hub axle . . . . . 250 Nm (184 ft-lb)

19. Install a new lock plate over the drive flange collar nut.

20. Install the drive axle as described below.

DRIVE AXLES

The drive axles use constant-velocity (CV) joints on both ends. The CV joints and associated components are the same on both ends of the drive axle. To replace a CV joint or dust boot, the drive axle must be removed from the car.

To remove and install drive axle

1. Raise the rear of the car.

> ***WARNING —***
> *Make sure that the car is firmly supported on jack stands designed for the purpose. Place the jack stands beneath a structural chassis point. Do not place jack stands under suspension parts.*

2. Remove the drive axle CV joint bolts from both ends of the drive axle and remove the drive axle from the car. See Fig. 10.



Fig. 10. Drive axle outer CV joint bolt being removed.

3. Installation is the reverse of removal. Make sure all thread bores, bolts and mating surfaces are clean. Make sure the lockplates are reinstalled.

Tightening Torque

- Drive axle to differential and drive flange
  standard M10 bolt . . . . . 83 Nm (61 ft-lb)
  lock-tooth M10 bolt . . . . . 100 Nm (74 ft-lb)

To replace CV joint and joint boot

1. Remove the drive axle from the car as described above.

2. Remove the boot clamping bands and cut the old boot off the joint and shaft.

3. Lift off the outer dust cover from the joint and remove the circlip retaining the joint inner hub to the shaft. See Fig. 11.

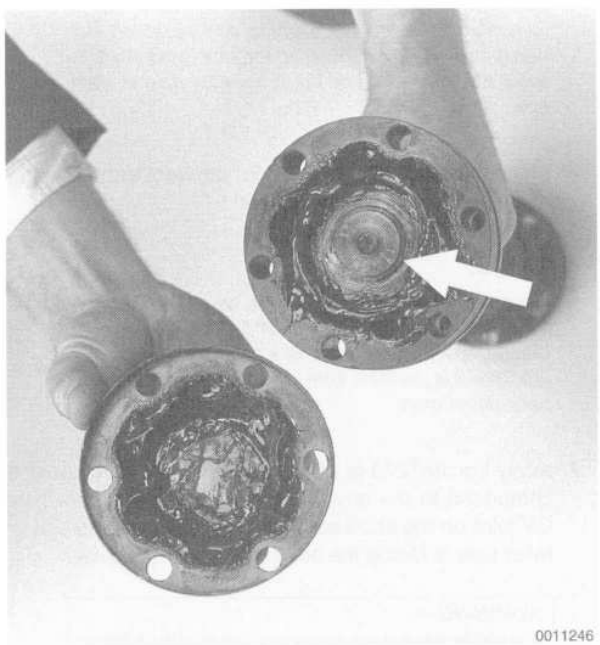

Fig. 11. Outer dust cover shown removed from CV joint. Clean away grease and remove circlip (**arrow**) from shaft end.

4. While supporting the inner hub, press the drive axle out of the joint. See Fig. 12.

5. Clean all the old lubricant off the shaft splines and the joint's inner splines.

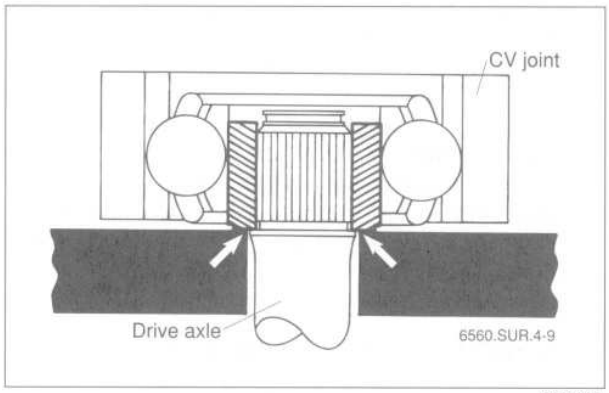

0006560

Fig. 12. Support CV joint at inner hub (**arrows**) during pressing operation.

NOTE —

To inspect a CV joint, clean away the grease and look for galling, pitting and other signs of wear or physical damage. Polished interior surfaces or visible ball tracks alone are not necessarily cause for replacement. Discoloration due to overheating indicates lack of lubrication. A joint that is otherwise in good condition may be reinstalled if thoroughly cleaned and repacked with new grease. Before reinstalling the joint to the shaft, inspect the drive axle and the splines for wear or damage.

6. Place the small clamping band, the boot and the inner joint cover over the drive axle.

NOTE —

When replacing the CV joint boot, use a complete CV joint boot repair kit. The kit will include a new boot, clamps, special lubricant, and a new inner CV joint circlip. The kit is available from an authorized BMW dealer parts department.

7. Apply Loctite®270 or an equivalent heavy-duty locking compound to the drive axle splines. Position the new CV joint on the shaft so that the hub with the raised or taller side is facing the shaft. See Fig. 12 above.

WARNING —

Do not let the locking compound contact the balls in the joint. Apply only a thin coat to cover the splines.

8. Press the shaft into the joint while supporting the inner hub of the joint. Install the new circlip.

NOTE —

Do not let the ball hub pivot more than 20° in the outer ring of the joint. The balls will fall out if the hub is pivoted too far.

9. Pack each CV joint and rubber boot with the specified amount of the lubricant supplied in the boot kit. Apply adhesive to the large end of the boot and mount it on the joint. Secure the boot with the clamps. Then apply sealer to the joint end cover(s) and install them.

NOTE —

BMW recommends Bostik 1513 or Epple 4851 adhesive, and Epple 39 or Curil T sealer.

CV Joint Lubricant Capacity

- Each joint . . . . . .80 gm (2.8 oz.)

TRAILING ARMS

The trailing arms and their mounting bushings control the position of the rear wheels. A damaged trailing arm or worn bushings will change the rear wheel alignment and may adversely affect handling and stability.

WARNING —

Do not attempt to straighten a damaged trailing arm. Bending or heating may weaken the original part.

The rear brake lines must be disconnected to remove a trailing arm. This means the complete brake system must be bled as part of the installation procedure.

NOTE —

On cars with Automatic Stability Control+Traction (ASC+T), special BMW test equipment is required to properly bleed the brakes. See **340 Brakes** *for additional information before opening the brake hydraulic system.*

To remove and install trailing arm

1. Raise the rear end of the car and support it securely on jack stands. Remove the wheel.

2. Remove the outer CV joint from the drive flange as described above.

3. Disconnect the rear brake line at the union shown in Fig. 13. Drain the brake fluid or plug the line.

4. Remove the brake caliper and brake rotor. See **340 Brakes**. Disconnect the parking brake cable from the parking brake actuator. Unclip the parking brake cable from the trailing arm.

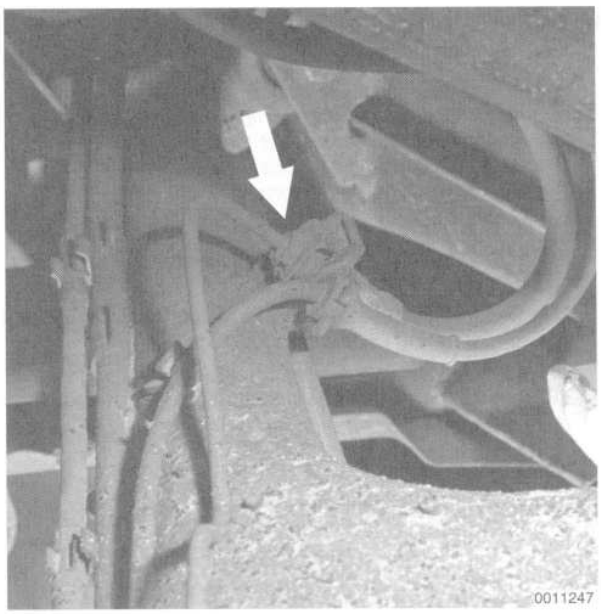

Fig. 13. Rear brake line union (**arrow**) on top of the trailing arm.

5. Remove the ABS pulse sensor from the brake caliper and unclip the sensor's wiring from the trailing arm.

6. If removing the right trailing arm, separate the brake pad wear sensor connector.

7. Disconnect the stabilizer bar link from the trailing arm.

8. Remove the connecting link mounting bolt from the trailing arm. See Fig. 14.

9. Disconnect the rear strut lower mounting bolt. Pull the strut away from the trailing arm.

10. Remove the two trailing arm through-bolts and nuts and remove the trailing arm from the car. See Fig. 15.

11. If removing the right side trailing arm, unbolt the diagonal support arm from the connecting link, then loosen the other end of the arm and swing it out of the way. See Fig. 16.

Installation is the reverse of removal. Always use new self-locking nuts. When installing the trailing arm mounting bolts, install the inner bolt first. Tighten the mounting bolts to the final tightening torque with the car on the ground and loaded as specified under **Ride Height.** Bleed the brake system as described in **340 Brakes**.

If the trailing arm is being replaced, transfer the attached brake system components to the new arm as described in **340 Brakes** and install a new wheel bearing as described earlier under **Rear Wheel Bearings**.

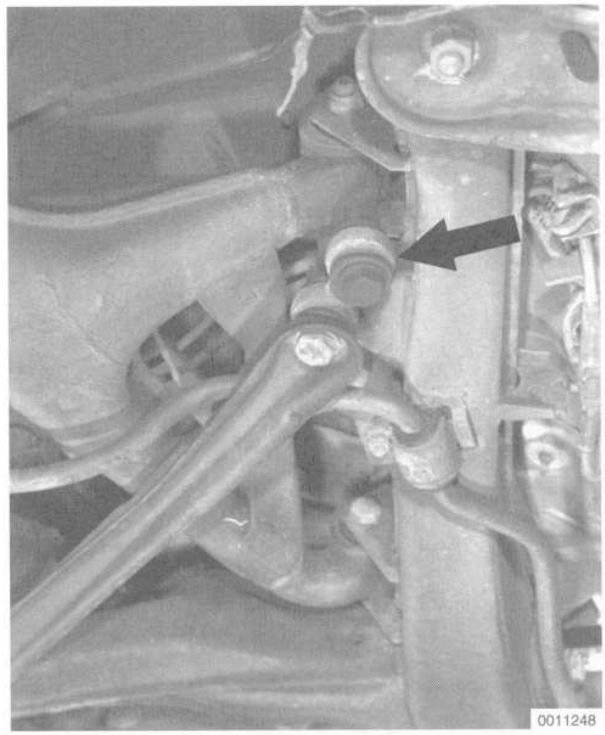

Fig. 14. Trailing arm connecting link (**arrow**).

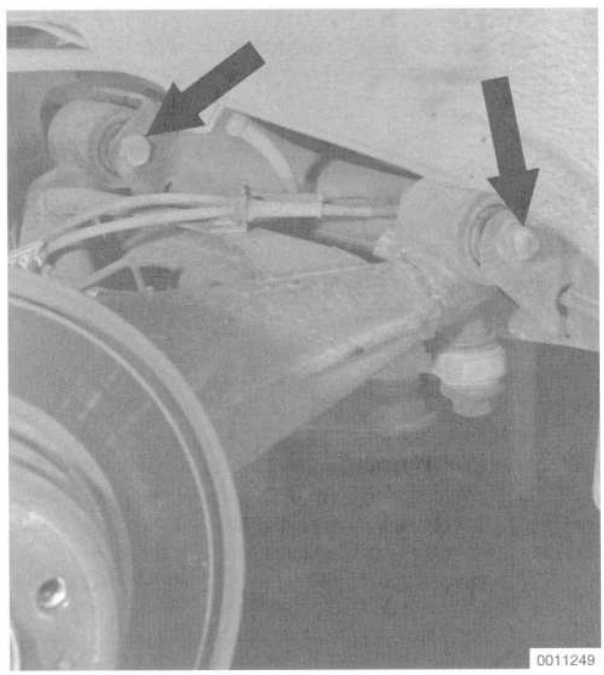

Fig. 15. Trailing arm through-bolts (**arrows**).

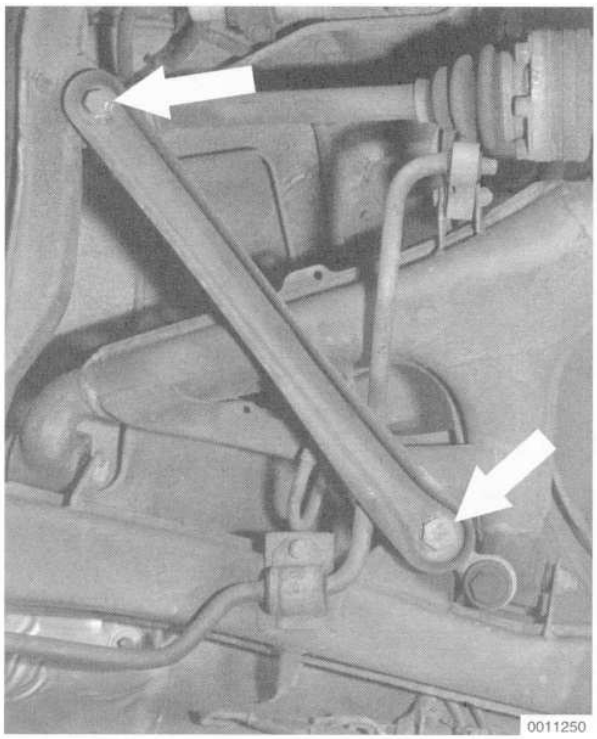

Fig. 16. Diagonal support mounting bolts (**arrows**).

NOTE —
BMW-supplied replacement trailing arms come with the bushings installed. A new wheel bearing will have to be installed.

Tightening Torques

- Connecting link to rear axle subframe (car in normal loaded position) . . . . . 127 Nm (94 ft-lb)
- Diagonal support arm to rear axle subframe . . . . . .110 Nm (81 ft-lb)
- Drive axle to wheel drive flange
  standard M10 bolt . . . . . 83 Nm (61 ft-lb)
  lock-tooth M10 bolt . . . . . 100 Nm (74 ft-lb)
- Rear strut to trailing arm (car in normal loaded position) . . . . . 127 Nm (94 ft-lb)
- Road wheel to wheel hub . . . . 100±10 Nm (74±7 ft-lb)
- Trailing arm to rear axle subframe (car in normal loaded position)
  M12 bolts (except 10.9) . . . . . 67 Nm (50 ft-lb)
  10.9 bolts . . . . . 77 Nm (57 ft-lb)

To replace trailing arm bushings

NOTE —
Special offset (eccentric) trailing arm bushings are available from BMW to correct for slight out-of-tolerance rear toe-in settings. See an authorized BMW dealer for additional parts information.

1. Remove the trailing arm as described above.
2. Note the installed position of the bushings, then press them out of the trailing arm.
3. Press the new bushings in so that the longer end of the inner sleeve faces the center of the car (when the trailing arm is installed).
4. Install the trailing arm as described above.

SELF-LEVELLING SUSPENSION (LAD)

The self-levelling rear suspension system, called LAD (Load Absorption Dampening), uses mechanical and hydraulic components to monitor and adjust the rear suspension ride height based on load and driving conditions. The system is in operation whenever the engine is running and the vehicle load is changed.

NOTE —
To identify LAD-equipped cars, inspect the power steering system reservoir. On cars without LAD, the plastic power steering reservoir has a cap with an integral dipstick. On cars with LAD, the metal reservoir has a removable cover held in place with a retaining nut and no dipstick. See Fig. 17.

The main components of the LAD system are the struts with load-sensing dampers, a mechanical regulating valve, fluid accumulators, and a tandem power steering pump. Except for a camber warning switch, the system is fully hydro-mechanical.

A camber warning switch is used to monitor suspension loading via the instrument cluster and check control. If the rear axle is loaded beyond the regulating limit of the LAD system (i.e. excessive wheel camber), the check control warning **SUSPN LEVELLING** will be displayed. The camber warning switch is mounted on the rear axle subframe.

The LAD regulating valve is mechanically connected to the rear anti-roll bar via a connecting link and a lever. When the suspension is loaded or unloaded, the anti-roll bar twists and the lever on the regulating valve is repositioned to either direct hydraulic pressure to the spring struts (raising the car) or back to the power steering fluid reservoir (lowering the car).

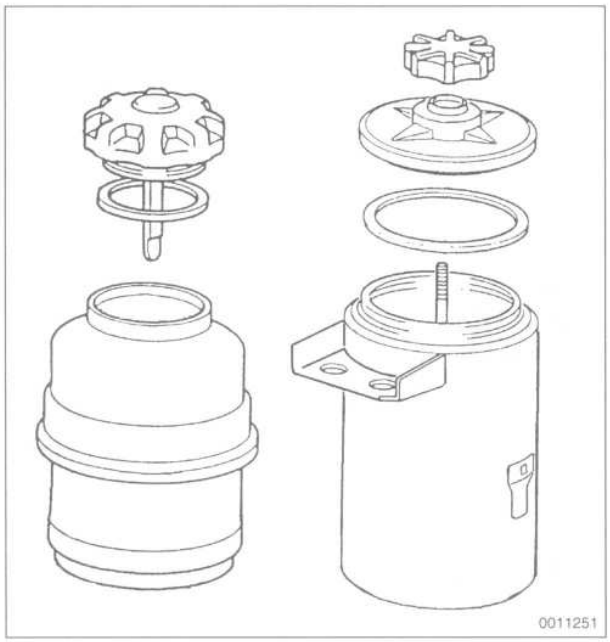

Fig. 17. Power steering fluid reservoir on cars without LAD (left), and with LAD (right).

The LAD hydraulic system uses an additional pump integrated into the power steering pump. For information on removing and installing the power steering/LAD pump, see **320 Steering and Wheel Alignment.**

To pressure test LAD system

Testing the LAD hydraulic pump pressure requires a 0–150 bar (0–2000 psi) pressure gauge and the correct fittings to install the gauge in-line with the LAD hydraulic system. Make sure the power steering/LAD pump drive belt is in good condition and properly tensioned.

1. Raise the rear of the car.

> ***WARNING —***
> *Make sure that the car is firmly supported on jack stands designed for the purpose. Place the jack stands beneath a structural chassis point. Do not place jack stands under suspension parts.*

2. Connect the gauge between the pump and the pump output fitting. Use new sealing washers.

> ***NOTE —***
> *Be sure to connect the gauge to the LAD hydraulic system and not the power steering system. The LAD hydraulic output line will be going to the rear of the car.*

3. Working beneath the rear of the car, disconnect the control link from the regulator valve lever. With the transmission in neutral and the parking brake applied, start the engine.

> ***WARNING —***
> *Only run the car in a well-ventilated area. Exhaust fumes can be fatal.*

4. Working beneath the rear of the car, operate the LAD regulator lever to three positions as specified below. Have an assistant note the pressure gauge readings at each position and compare them with the specifications listed.

Pump Pressure

- Lever in center position (car at normal position) . . . . . 20–30 bar (290–435 psi)
- Lever in forward position (car raised) . . . . . more than 120 bar (1740 psi)
- Lever in rear position (car lowered) . . . . . 20-30 bar (290-435 psi)

5. When finished testing, remove the pressure gauge and install the fluid hose to the pump. Take care not to overtorque the banjo bolt. Fill and bleed the system as described below under **To fill and bleed LAD system.**

Tightening Torque

- Control link to LAD regulator valve lever (self-locking nut) . . . . . 9 Nm (80 in-lb)
- Hydraulic hose to LAD pump . . . . . 31 Nm (22 ft-lb)

6. Adjust the rear ride height as described below. Install the control link to the regulator valve lever using a new self-locking nut.

To adjust ride height (cars with LAD)

Adjusting the ride height on LAD-equipped cars requires that the car be placed over a pit or on a full platform lift with the rear wheels on moveable plates. This allows the rear wheel camber to adjust as the rear of the car is raised and lowered.

1. Put the car in neutral gear and release the parking brake.

2. Load the trunk with the weight specified below.

LAD ride height load requirements

- Weight placed over rear axle to check or adjust ride level height
  - sedan models . . . . . 200 kg (440 lb)
  - touring models . . . . . 280 kg (616 lb)

3. Working beneath the rear of the car, disconnect the control link from the regulator valve lever. Start the engine.

> ***WARNING —***
> *Only run the car in a well-ventilated area. Carbon monoxide fumes can be fatal.*

4. Using the ride height specifications given earlier under **Ride Height,** move the LAD regulator valve lever forward or rearward until the height is correct. Then lock the lever in the center position by inserting a small ($^1/_8$ in.) drill bit through the lever and into the valve body. See Fig. 18.

> ***CAUTION —***
> *If the lever is pushed rearward past the center position once the correct level is reached, repeat the adjusting procedures*

> ***NOTE —***
> *Moving the lever forward raises the car. Moving the lever rearward lowers the car. When the lever is in the center position, the ride height is maintained.*

5. If necessary, loosen the locknuts and adjust the control link length so that the link end fits correctly into the lever. Tighten the lock nuts.

6. Using a new self-locking nut, install the link and then remove the drill bit.

Tightening Torque

- Control link to LAD regulator valve lever (self-locking nut). . . . . 9 Nm (80 in-lb)

7. Remove the load from the trunk and allow the system to self-adjust the ride height. Reload the car, wait a few minutes, and then check that the ride height is correct.

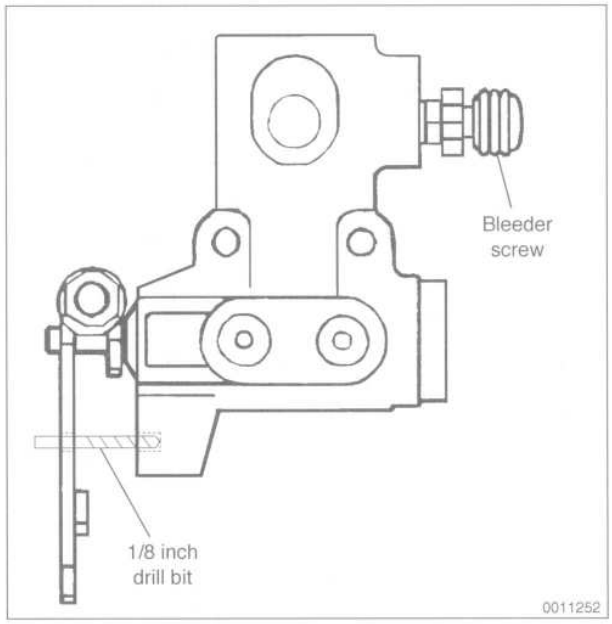

Fig. 18. LAD regulator valve. Lock the lever in position by inserting a $^1/_8$ in. drill bit through hole in lever.

To fill and bleed LAD system

1. With the engine off, fill the power steering/LAD fluid reservoir until the fluid level is approximately 25 mm (1 in.) below the reservoir rim.

LAD Hydraulic Fluid

- Pentosin® CHF 7.1 hydraulic fluid or equivalent

2. Start the engine. Turn the steering wheel from lock to lock two times. Turn the engine off.

> ***WARNING —***
> *Only run the car in a well-ventilated area. Exhaust fumes can be fatal.*

3. Raise the rear of the car until the drive wheels are off the ground. Wait about two minutes and check the fluid level. The fluid level should be no more than 25 mm (1 in.) above the base of the reservoir screen. Correct the fluid level as necessary.

To replace LAD regulator valve

1. Raise the rear of the car.

> *WARNING —*
> *Make sure that the car is firmly supported on jack stands designed for the purpose. Place the jack stands beneath a structural chassis point. Do not place jack stands under suspension parts.*

2. Place a drain pan beneath the LAD regulator valve and loosen the bleeder screw to relieve the system pressure. See Fig. 18 given earlier.
3. Remove the rear exhaust pipe and muffler as described in **180 Exhaust System**.
4. Working beneath the rear of the car, disconnect the control link from the LAD regulator valve lever.
5. Remove all of the hydraulic fluid lines and hoses, noting their correct installed positions. Plug open lines and fittings.
6. Remove the regulator valve with its mounting bracket. If replacing the regulator valve remove it from its mounting bracket.
7. Make sure all fluid fittings and thread bores are clean.
8. Mount the regulator valve assembly to the rear axle subframe. Connect the control link and all fluid lines to the valve. Use new self-locking nuts.

Tightening torque

- LAD control link to regulator valve (self-locking nut) . . . . . 9 Nm (80 in-lb)
- LAD hydraulic fluid lines/hoses to regulator valve . . . . . 20 Nm (15 ft-lb)
- LAD regulator valve to mounting bracket (self-locking nuts) . . . . . 9 Nm (80 in-lb)
- LAD regulator valve with mounting bracket to rear axle subframe (self-locking nuts)
  M6 bolts . . . . . 9 Nm (80 in-lb)
  M8 bolts . . . . . 22 Nm (16 ft-lb)

9. Fill and bleed the hydraulic system as described earlier under **To fill and bleed LAD system**.
10. Adjust the LAD system ride height as described earlier under **To adjust ride height (cars with LAD)**.

To replace LAD fluid accumulator

1. Raise the rear of the car.

> *WARNING —*
> *Make sure that the car is firmly supported on jack stands designed for the purpose. Place the jack stands beneath a structural chassis point. Do not place jack stands under suspension parts.*

2. Place a drain pan beneath the LAD regulator valve and loosen the bleeder screw to relieve the system pressure. See Fig. 18 given earlier.
3. Place the pan beneath the fluid accumulator and remove the hydraulic line and hose from the accumulator.
4. Remove the fluid accumulator.
5. Make sure all fluid fittings and thread bores are clean.
6. Mount the fluid accumulator to its bracket and to the rear axle subframe using new self-locking nuts.

Tightening Torque

- Fluid accumulator with mounting bracket to rear axle subframe (self-locking nuts) . . . . . 9 Nm (80 in-lb)

7. Connect the hydraulic fluid lines to the fluid accumulator. Fill and bleed the hydraulic system as described above under **To fill and bleed LAD system.**

Tightening Torque

- Hydraulic fluid lines/hoses to regulator valve . . . . . 20 Nm (15 ft-lb)

8. Adjust the LAD system ride height as described above under **To adjust ride height (cars with LAD)**.

331 Final Drive

GENERAL 331-1

FINAL DRIVE SERVICE 331-1
Final drive, removing and installing 331-2
Final drive rubber mounts, replacing. 331-2
Final Drive Oil Seals 331-3
Final drive flange oil seal, replacing. 331-3
Final drive, input shaft oil seal, replacing. 331-3
Final drive oil, draining and filling. 331-4

GENERAL

This repair group covers repair operations that do not require complicated disassembly of the final drive. Internal repairs and final drive disassembly are not covered in this manual.

FINAL DRIVE SERVICE

All final drive work requires some method of raising the car and supporting it securely while the work is performed. Jack stands and a floor jack can easily be used, but use extreme caution when working beneath the car and lowering the final drive. See **010 Fundamentals for the Do-it-youself Owner**.

The final drive is mounted to the rear suspension cross-member and is easily removed using ordinary hand tools. There are three oil seals in the final drive housing that can be replaced with unit installed in the car. Fig. 1 shows a view of the final drive and rear suspension.

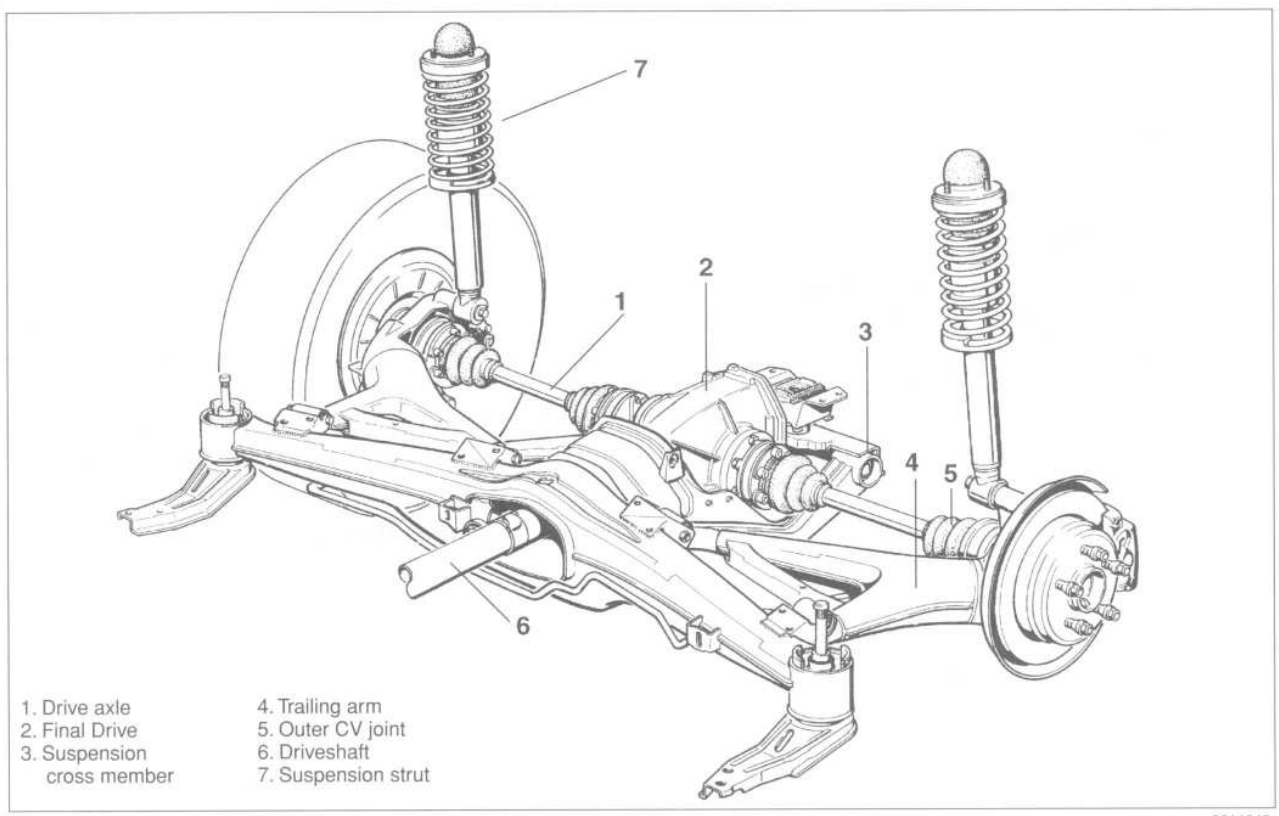

Fig. 1. Rear suspension assembly.

Final drive, removing and installing

The final drive unit is supported at three points on the suspension crossmember through rubber bushings. New self-locking nuts should always be used when re-attaching the driveshaft to the final drive.

1. Raise rear of car and support it securely.
2. Drain oil from final drive unit, as necessary. See **Final drive oil, replacing**.
3. Make matching marks on driveshaft and final drive input flange. Remove bolts and nuts that hold driveshaft to final drive. Push driveshaft forward slightly and suspend from body with stiff wire.

> ***CAUTION —***
> *Do not let the driveshaft or drive axles hang unsupported. Damage to the driveshaft center bearing or drive axle outer CV joint could result.*

4. Disconnect drive axles from final drive and suspend from body with stiff wire. See **330 Rear Suspension**.
5. Place jack beneath final drive unit and support weight of unit.
6. Remove front final drive mounting bolt. See Fig. 2.

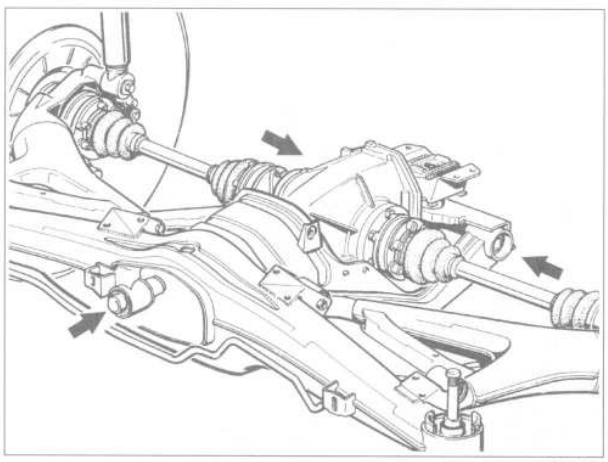

0011745

Fig. 2. Final drive mounting bolts (**arrows**).

7. Disconnect wires for speedometer pulse sender and remove wiring harness and connector from final drive housing.
8. Remove rear final drive mounting bolts (left and right). See Fig. 2.

Installation is the reverse of removal. Position the final drive in place against its mounts and loosely install the front mounting bolt to locate the unit. Then install the left and right rear bolts. Use new self-locking nuts when reconnecting the driveshaft and align marks made during removal. Torque nuts, while holding bolts. Check final drive oil level and add or fill as necessary.

Tightening torques are listed below.

> ***CAUTION —***
> *Do not reuse self-locking nuts. These nuts are designed to be used only once and should be replaced whenever they are removed.*

> ***NOTE —***
> *When installing a new or BMW remanufactured final drive unit, special break-in procedures apply. During the first 1,000 Km (620 miles), the car should be driven at different engine and road speeds, but never exceeding 2/3 rds of the maximum speed.*

Tightening Torques

- Final drive to subframe . . . . . 123 Nm (91 ft-lb)
- Final drive to rubber mounts . . . . . 77 Nm (57 ft-lb)
- Drive axle to final drive
  M10 . . . . . 83 Nm (61 ft-lb)
  M10 with locking teeth (always replace bolts and washers) . . . . . 96 Nm (70 ft-lb)
- Driveshaft to final drive flange . . . . . See **260 Driveshaft**
- Speedometer sender to final drive . . . 10 Nm (89 in-lb)
- Oil drain and fill plug . . . . . 70 Nm (52 ft-lb)

Final drive rubber mounts, replacing

Replacement of the rubber bushings for the final drive requires special bushing press tools to remove and install the bushings into the suspension crossmember. The three bushings (front, left and right rear) are accessible after removing the final drive unit. When replacing the old bushings, note the installation direction of the bushings before removing them.

Final Drive Oil Seals

Low oil level caused by a faulty final drive oil seal may be the cause of noisy operation or limited-slip chatter. The drive flange (side) oil seals can be replaced while the final drive is installed. The input shaft (front) oil seal can only be replaced once the final drive unit is removed.

> ***NOTE —***
> *Do not mistake leaking CV joints for flange seal leaks. It may be helpful to degrease the final drive to pinpoint the source of the leak prior to replacing seals.*

Final drive flange oil seal, replacing

1. Detach drive axle(s) from final drive. See **330 Rear Suspension**.

> ***CAUTION —***
> *Suspend the detached drive axle from the car body with a stiff wire hook to prevent damage to the outer CV joint.*

2. Pry drive flange from final drive. See Fig. 3.

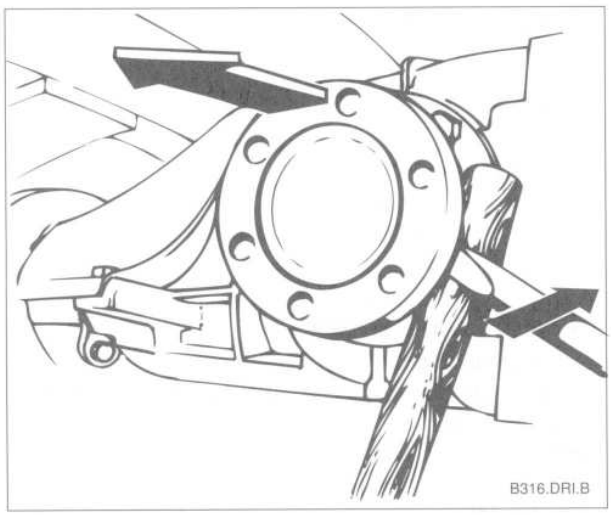

Fig. 3. Drive flange being pried off. For leverage, use a wooden dowel as shown.

3. Remove wire (snap) ring from final drive opening. See Fig. 4.

> ***NOTE —***
> *Inspect flange at the point where the oil seals rides on the shaft. Replace the flange assembly if there is a groove worn in the shaft.*

4. Pry old oil seal from its recess using a hooked seal removal tool, or a large screwdriver.

> ***CAUTION —***
> *Be careful not to mar the final drive housing when removing the seal.*

5. Dip new seal in final drive lubricant and drive seal into place until fully seated.

6. Install new snap ring in groove of final drive housing. Make sure both ends of ring are fully seated in groove.

7. Install drive flange by pressing it in by hand until snap ring engages. It may be necessary to turn drive flange slightly while pushing.

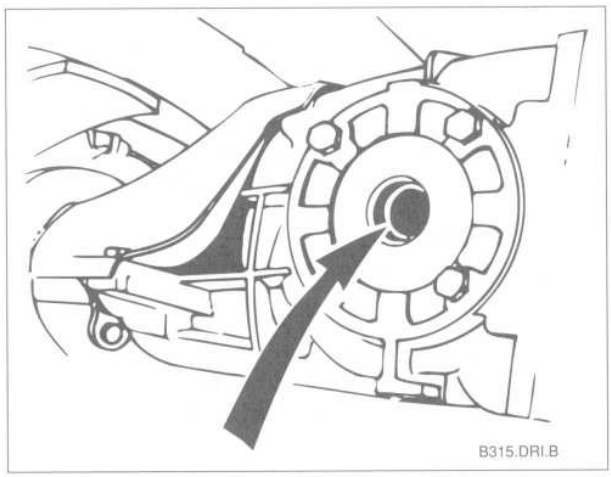

Fig. 4. Drive flange snap ring (**arrow**) to be removed from final drive housing.

8. Attach drive axle and tighten bolts.

Tightening Torque

- Drive axle to final drive
  - M10 . . . . . 83 Nm (61 ft-lb)
  - M10 with locking teeth (always replace bolts and washers) . . . . . 96 Nm (70 ft-lb)

Final drive input shaft oil seal, replacing

1. Drain oil and remove final drive as described earlier.

2. Drain oil from final drive.

3. Make matching marks on input shaft and input shaft collar nut. See Fig. 5.

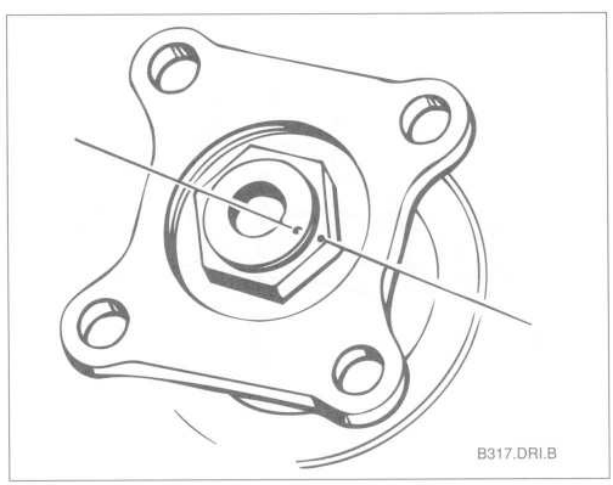

Fig. 5. Make matching marks on input shaft collar nut and flange.

4. Pry lockplate from nut and then hold input flange and remove collar nut. If necessary, use a puller to remove input flange.

5. Pry faulty seal from its recess using a hooked seal removal tool or a large screwdriver. Dip new seal in final drive lubricant and drive seal into position.

> ***CAUTION —***
> *Be careful not to mar the housing when removing the seal.*

6. Lightly lubricate input shaft and press input flange back on. Install collar nut and slowly tighten until matching marks line up, coming as close as possible to specified torque.

> ***NOTE —***
> *If the input flange nut torque is exceeded, the crushable collar sleeve behind the flange will need to be replaced. This operation requires disassembly of the final drive unit.*

Tightening Torques

- Final drive input shaft flange to pinion
  M20 pinion thread diameter . . . . . 85 Nm (137 ft-lb)
  or until matching marks line up

7. Install a new lockplate.

Final drive oil, draining and filling

1. Drive car to warm final drive fluid.

2. Place a drain pail below final drive and remove drain and fill plug from final drive. See Fig. 6.

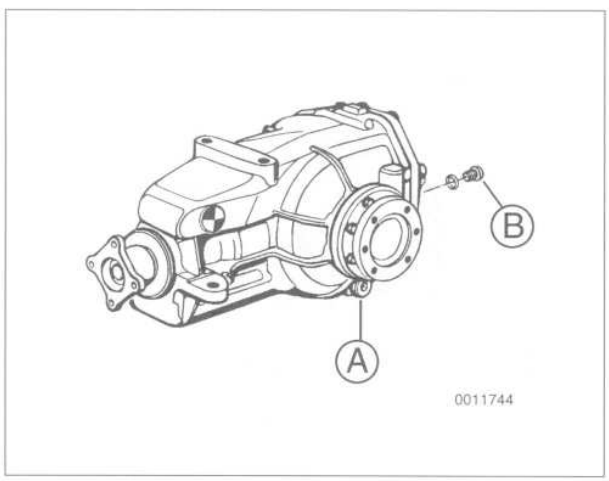

0011744

Fig. 6. Final drive drain plug (**A**) and fill plug (**B**).

> ***NOTE —***
> - *Use a 14 mm allen bit socket to remove the drain plug. Alternatively, cut approximately 30 mm (1.2 in.) from an allen key and use an open end wrench on the key stub.*
> - *If the car is raised in the air, it should be on a level plane.*
> - *To identify the type of differential (limited slip vs. open), locate the sheet metal data tag on the left-hand rear side of the final drive unit. This tag identifies the type and final drive ratio. For example S 3,10 means that it is a limited slip differential (S) with a 3.10 final ratio.*

3. Reinstall and tighten drain plug.

4. Fill final drive with appropriate type and quantity of lubricant. Install and tighten fill plug.

> ***NOTE —***
> *The final drive fluid level is correct when the fluid begins to spill from the fill plug.*

Final Drive Drain and Fill

- Oil specifications
  w/o limited slip . . . . . BMW SAF-XO Synthetic Oil
  with limited slip . . . . . BMW SAF-XLS Synthetic Oil
- Final drive oil capacity
  525i, 530i. . . . . 1.7 liters (1.8 qt.)
  535i, 540i. . . . . 1.9 liters (2.0 qt.)

340 Brakes

GENERAL 340-1

TROUBLESHOOTING 340-1

BLEEDING BRAKES 340-2
To pressure bleed brakes (except cars with ASC+T) 340-3
To vacuum bleed brakes (except cars with ASC+T) 340-3
To manually bleed brakes (except cars with ASC+T) 340-3

BRAKE PADS, CALIPERS, AND ROTORS 340-3
To replace brake pads 340-4
To remove and install brake caliper 340-5
To remove and install brake rotor 340-6

MASTER CYLINDER 340-8
To remove and install master cylinder 340-8

BRAKE BOOSTER 340-8
To remove and install brake booster 340-8

BRAKE PEDAL 340-10
To adjust brake pedal height (except cars with M60 engine 340-10

PARKING BRAKE 340-10
To adjust parking brake 340-10
To remove and install parking brake shoes . . 340-11
To replace parking brake cable 340-12

ANTILOCK BRAKE SYSTEM (ABS) 340-12
ABS System Inspection 340-12
To replace ABS pulse sensor 340-12

TABLES

a. Brake System Troubleshooting 340-2
b. Rotor Reconditioning Specifications 340-7

GENERAL

All BMW E34 models are equipped with power-assisted four-wheel disc brakes with integral anti-lock brakes (ABS). A vacuum brake booster power-assists a dual-circuit master cylinder. Single-piston calipers act on vented front rotors and solid rear rotors. A brake pad wear sensor for each axle indicates when pads need replacement. The dual drum-type parking brake is integrated with the rear brake rotors.

> ***WARNING —***
> - *Brake friction materials such as brake linings or pads may contain asbestos fibers which can lead to illnesses. Do not create dust by grinding, sanding, or cleaning the pads with compressed air. Avoid breathing any asbestos fibers or dust.*
> - *Brake fluid is poisonous, highly corrosive and dangerous to the environment. Wear safety glasses and rubber gloves when working with brake fluid. Do not siphon brake fluid with your mouth. Immediately clean away any fluid spilled on painted surfaces and wash with water. Dispose of brake fluid properly.*
> - *Do not reuse self-locking nuts, bolts or fasteners. They are designed to be used only once and may fail if reused. Always replace them with new self-locking nuts.*

TROUBLESHOOTING

Brake performance is mainly affected by three things: the level and condition of the brake fluid, the system's ability to create and maintain hydraulic pressure, and the condition of the friction components.

Air in the brake fluid will make the brake pedal feel spongy during braking or will increase the brake pedal force required to stop. Fluid contaminated by moisture or dirt can corrode the system. Inspect the brake fluid inside the reservoir. If it is dirty or murky, or is over a year old, the fluid should be replaced.

Visually check the hydraulic system starting at the master cylinder. To check the function of the master cylinder hold the brake pedal down hard with the car stopped and the engine running. The pedal should feel solid and stay solid. If the pedal slowly falls to the floor, either the master cylinder is leaking internally, or fluid is escaping from other points in the system. If no leaks can be found, the master cylinder is faulty and should be replaced. Check all brake fluid lines and couplings for leaks, kinks, chafing and corrosion.

Check the brake booster by pumping the brake pedal approximately 10 times with the engine off. Then hold the pedal down and start the engine. The pedal should fall slightly. If not, check for any visible faults before suspecting a faulty brake booster. Check for strong vacuum at the vacuum hose fitting at the booster, and check the non-return valve for one-way flow.

Worn or contaminated brake pads will cause poor braking performance. Oil-contaminated or glazed pads cannot produce as much friction, and stopping distances will increase. Inspect the rotors for glazing, discoloration, scoring or oiliness.

Steering wheel vibration while braking at speed is often caused by warped rotors, but can also be caused by faulty thrust arm bushings. See **310 Front Suspension** for more information on thrust arm bushings.

Table a lists symptoms of brake problems, their probable causes, and suggested corrective actions.

Table a. Brake System Troubleshooting

Symptom	Probable cause	Corrective action
1. Brake squeak or squeal	**a.** Incorrectly installed brake pads or parking brake shoes	**a.** Check component installation.
	b. Brake pad carriers dirty or corroded	**b.** Remove brake pads and clean calipers.
	c. Brake pad anti-rattle springs faulty or missing	**c.** Install/replace anti-rattle springs.
	d. Brake pads heat-glazed or oil-soaked	**d.** Replace brake pads. Clean rotors. Replace leaking calipers as required.
	e. Wheel bearings worn (noise most pronounced when turning)	**e.** Replace worn bearings. See **310 Front Suspension** or **330 Rear Suspension**.
2. Pedal goes to floor when braking	**a.** Brake fluid level low due to system leaks	**a.** Check fluid level and inspect hydraulic system for signs of leakage. Fill and bleed system.
	b. Master cylinder faulty	**b.** Replace master cylinder.
3. Low pedal even after system bleeding	**a.** Master cylinder faulty	**a.** Replace master cylinder.
4. Pedal feels spongy or brakes work only after pedal is pumped	**a.** Air in brake fluid	**a.** Bleed system.
	b. Master cylinder faulty (internal return spring weak)	**b.** Replace master cylinder.
	c. Leaking line or hose unions	**c.** Repair or replace lines and hoses. Bleed system.
5. Excessive braking effort	**a.** Brake pads wet	**a.** Use light pedal pressure to dry pads while driving.
	b. Brake pads heat-glazed or oil-soaked	**b.** Replace brake pads. Clean rotors. Replace leaking calipers.
	c. Vacuum booster or vacuum hose connections to booster faulty	**c.** Inspect vacuum lines. Test vacuum booster and replace as required. Test vacuum non-return valve for one-way air flow.
6. Brakes pulsate, chatter, or grab	**a.** Warped brake rotors	**a.** Resurface or replace rotors.
	b. Brake pads worn	**b.** Recondition brakes.
	c. Brake pads heat-glazed or oil-soaked	**c.** Replace brake pads. Clean rotors. Replace leaking calipers.
7. Uneven braking, car pulls to one side, rear brakes lock	**a.** Incorrect tire pressures or worn tires	**a.** Inspect tire condition. Check and correct tire pressures.
	b. Brake pads on one side of car heat-glazed or oil-soaked	**b.** Replace brake pads. Clean rotors. Replace leaking calipers.
	c. Caliper or brake pads binding	**c.** Clean and recondition brakes.
	d. Worn suspension components	**d.** Inspect for worn or damaged suspension components. See **310 Front Suspension** or **330 Rear Suspension**.
8. Brakes drag, bind, or overheat	**a.** Brake caliper or brake pads binding	**a.** Clean or replace caliper.
	b. Master cylinder faulty	**b.** Replace master cylinder.

BLEEDING BRAKES

Brake bleeding is usually done for one of two reasons; either to replace old brake fluid as part of routine maintenance or to expel trapped air in the system that resulted from opening the brake hydraulic system during repairs.

When adding or replacing brake fluid always add new brake fluid from an unopened container. It is important to bleed the entire brake system whenever any part of the brake hydraulic system has been opened. Brake system bleeding can be done with a pressure bleeder, a vacuum bleeder, or manually. Pressure bleeding is recommended as the most efficient method.

When bleeding the brakes, start at the wheel farthest from the master cylinder and progress in the following order:

- right rear brake
- left rear brake
- right front brake
- left front brake

> ***WARNING —***
> *On cars with Automatic Stability Control + Traction (**ASC+T**), special BMW service equipment is required to properly bleed the ASC+T/ABS system. For safety reasons, the brake system on cars with ASC+T must not be bled using the procedures described below.*

To pressure bleed brakes (except cars with ASC+T)

1. Top off the brake fluid in the reservoir and connect the pressure bleeder to the reservoir. Connect the bleeder hose and waste bottle to the right rear caliper bleeder screw. Pressurize the system at approximately 1 bar (14.5 psi).

> ***CAUTION —***
> *Do not exceed a pressure of 2 bar (29 psi) when pressure bleeding the brake system. Excessive pressure will damage the brake fluid reservoir.*

2. Have a helper hold the brake pedal down.

3. Open the bleeder screw. See Fig. 1. Have the helper slowly pump the brakes twelve times with the bleeder screw open, holding the pedal down on the last pump. Close the bleeder screw.

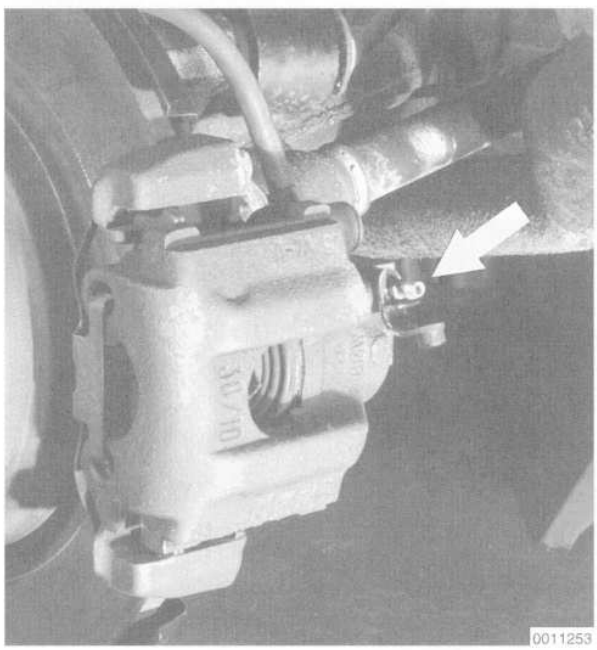

Fig. 1. Brake caliper bleeder screw (**arrow**).

4. Close the bleeder screw and release the brake pedal. Refill the brake fluid reservoir and proceed to the next wheel in the order given above.

To vacuum bleed brakes (except cars with ASC+T)

1. Top off the brake fluid in the reservoir and replace the reservoir cap.

2. Connect the vacuum pump to right rear brake bleeder screw. Route the discharge hose into a waste bottle.

> ***CAUTION —***
> *Vacuum bleeding requires an air-tight seal between the pump and the bleeder screw. Any leakage will result in faulty bleeding.*

3. Open the bleeder screw and withdraw the brake fluid until it is clean and without air bubbles.

> ***NOTE —***
> *Fill the brake fluid reservoir level frequently to prevent it from emptying during brake bleeding.*

4. Close the bleeder screw. Refill the brake fluid reservoir and proceed to the next wheel in the order given above.

To manually bleed brakes (except cars with ASC+T)

1. Top off the brake fluid in the reservoir and replace the reservoir cap. Connect the bleeder hose and waste bottle to the right rear bleeder screw.

2. Have a helper pump the brakes several times. Then hold the pedal down firmly on the last pump.

3. Open the right rear caliper bleeder screw and allow the fluid to expel. Close the bleeder screw.

4. Repeat procedures 2 and 3 at least 12 times, or until the discharged brake fluid is clean and without air bubbles.

> ***NOTE —***
> *Fill the brake fluid reservoir level frequently to prevent it from emptying during brake bleeding.*

5. Refill the brake fluid reservoir and proceed to the next wheel in the order given above and repeat the procedure.

BRAKE PADS, CALIPERS, AND ROTORS

Brake pads can be replaced without disconnecting the brake fluid hose from the caliper or having to bleed the brakes. The rotors can be replaced without disassembling the wheel hub and bearing. Always machine or replace rotors in pairs. Replace pad sets in pairs.

> ***WARNING —***
> *Brake friction materials such as brake linings or brake pads may contain asbestos fibers. Do not create dust by grinding, sanding, or cleaning the pads with compressed air. Avoid breathing any asbestos fibers or dust. Breathing asbestos can cause serious diseases such as asbestosis or cancer, and may result in death.*

To replace brake pads

This procedure is applicable to both front and rear brakes. Front and rear brake assemblies are basically the same, except that the rear brake rotors house the parking brake mechanism.

1. Raise the car and remove the wheels.

> ***WARNING —***
> *Make sure the car is firmly supported on jack stands designed for the purpose. Place the jack stands beneath a structural chassis point. Do not place jack stands under suspension parts.*

2. Remove the plastic caps from the guide bolt covers and then remove the guide bolts. See Fig. 2.

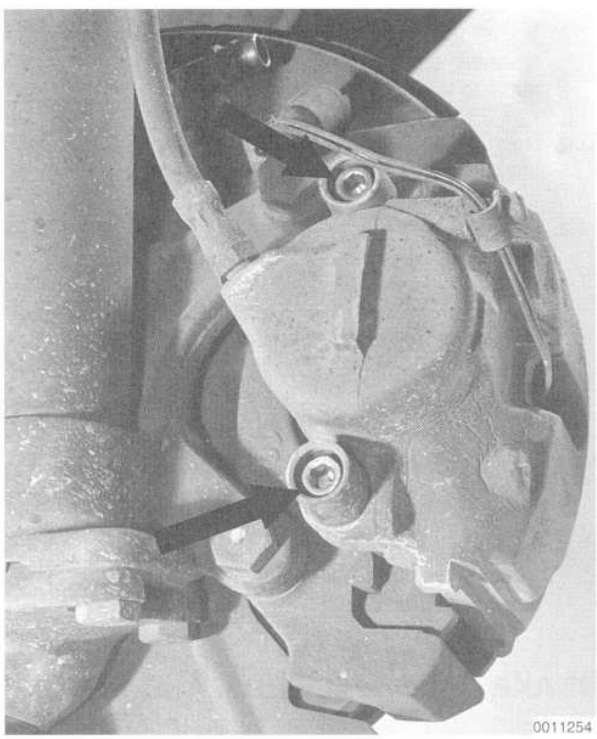

Fig. 2. Brake caliper guide bolts (**arrows**).

3. If applicable, disconnect the brake pad wear sensor connector and remove the wiring from its holder.
4. Remove the anti-rattle clip from the caliper. See Fig 3.
5. Pull the caliper straight off the rotor. See Fig. 4.

> ***CAUTION —***
> *Do not let the brake caliper hang from the brake hose. Support it from the chassis with strong wire.*

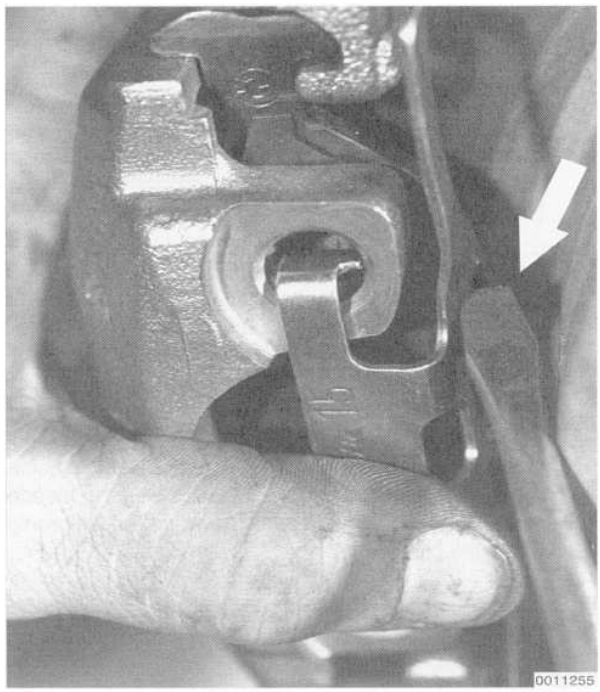

Fig. 3. Brake pad anti-rattle clip being unhooked from caliper using screwdriver (**arrow**).

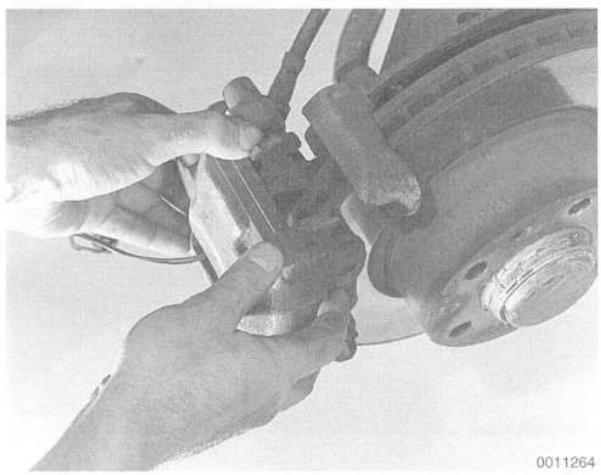

Fig. 4. Front brake caliper being removed.

> ***CAUTION —***
> *With the pads removed, residual hydraulic pressure may cause the caliper piston to slide out. Use a wooden block to hold the piston in place.*

NOTE —
If there is a ridge on the rotor edge, the caliper piston will have to be pushed back into the caliper before the caliper can be removed, as shown in Fig. 6.

6. Remove the brake pads from the caliper. Where applicable pry the pad wear sensor from the pad. See Fig. 5.

7. Inspect the brake caliper for signs of leakage. Check that the caliper piston slides smoothly into the caliper. Replace the caliper if any faults are found.

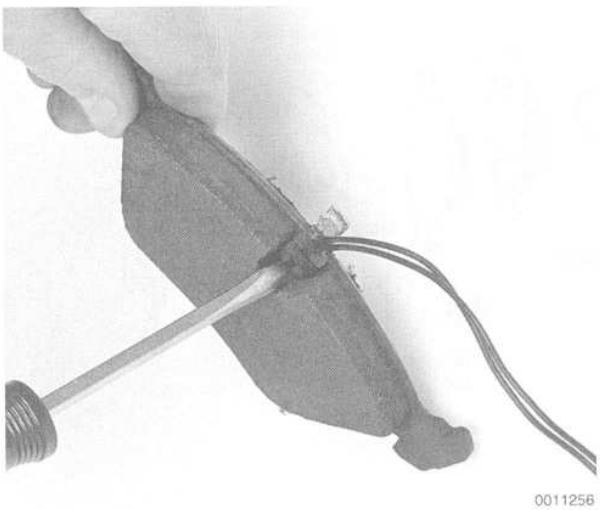

Fig. 5. Brake pad wear sensor being pried from brake pad. If reusing the sensor, use care when removing as they are easily damaged during removal.

8. Clean the guide bolts thoroughly and carefully inspect them for damage. Faulty guide bolts could cause brake failure.

9. Insert the brake pad wear sensor into the cutout in the new pad where applicable.

NOTE —
If the brake lining indicator light came on prior to brake pad replacement, the wear sensor should be replaced.

10. Slowly press the piston back into the caliper. See Fig. 6.

NOTE —
- *On ABS-equipped cars, it is easiest to open the caliper bleeder screw and drain off some fluid when pressing the piston back into the caliper. Open the bleeder screw only when applying force to the piston. Do not allow air to be drawn into the hydraulic circuit.*
- *Pressing the caliper piston in may cause the brake fluid reservoir to overflow. To prevent this, use a clean syringe to first remove some fluid from the reservoir.*

11. Lightly coat the contact points of the new pads with Plastilube® or an equivalent. Place the outer brake pad onto the caliper. Place the inner brake pad with its locating spring onto the brake caliper piston. Route the pad wear sensor wiring through the caliper opening and bleeder dust cap.



Fig. 6. Brake caliper piston being pressed into caliper. Use a rag to protect caliper piston and seals.

12. The remainder of installation is the reverse of removal. Do not lubricate the guide bolts. Once the brake assembly is installed depress the brake pedal several times.

Tightening Torques
- Brake caliper to caliper carrier (guide bolt) . . . . . 35 Nm (26 ft-lb)
- Road wheel to hub . . . . . 100 ± 10 Nm (74 ± 7 ft-lb)

To remove and install brake caliper

The front brake caliper assembly is shown in Fig. 7. The rear brake caliper is shown in Fig. 9.

1. Raise the car and remove the wheel.

WARNING —
Make sure the car is firmly supported on jack stands designed for the purpose. Place the jack stands beneath a structural chassis point. Do not place jack stands under suspension parts.

2. Remove the pad carrier mounting bolts from the strut assembly (front caliper) or from the trailing arm (rear caliper). See Fig. 8.

3. Loosen the brake hose fitting at the caliper and spin the caliper assembly off the hose.

4. Inspect the brake caliper for any signs of leakage. Check that the caliper piston slides smoothly into the caliper. Replace the caliper if any faults are found.

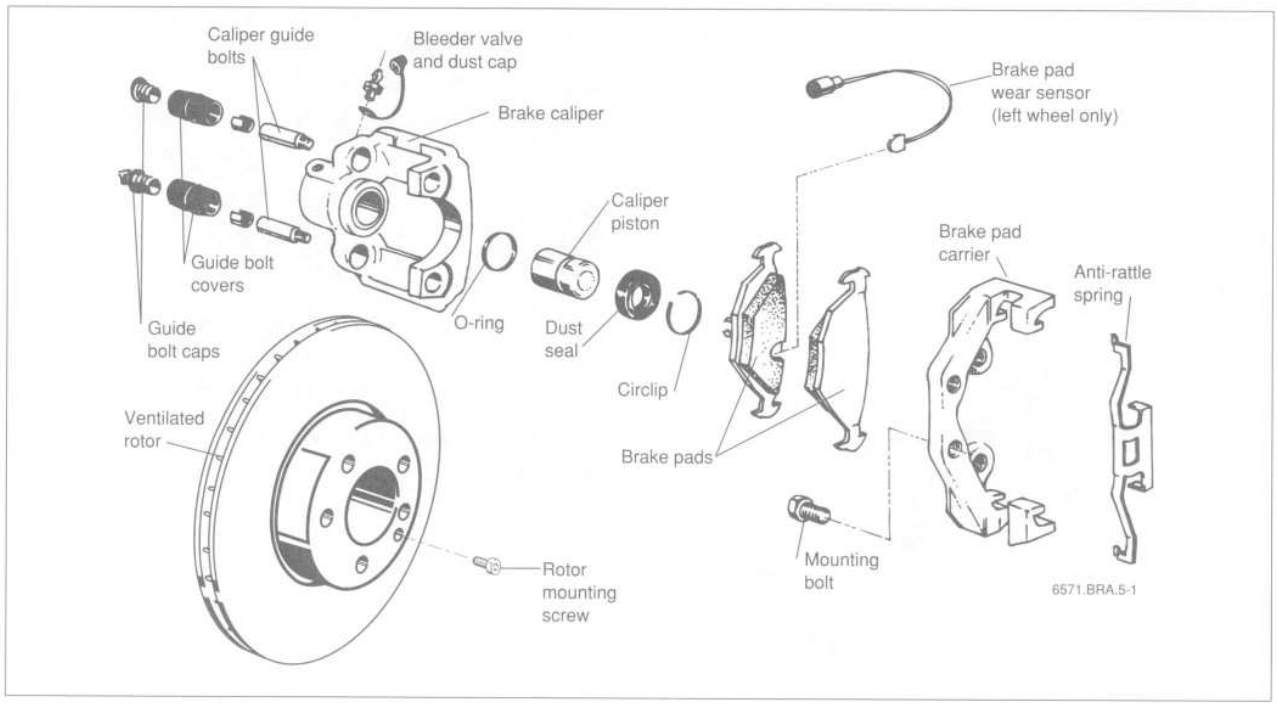

Fig. 7. Front brake caliper assembly.

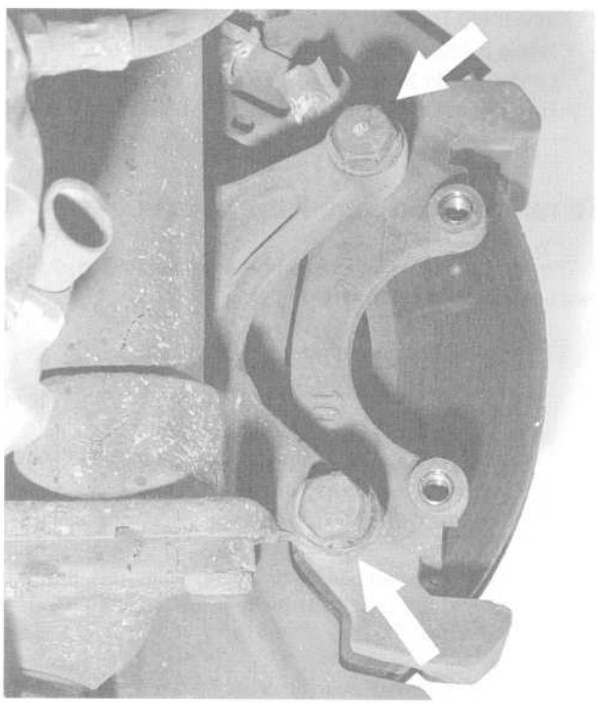

Fig. 8. Front brake pad carrier mounting bolts (**arrows**). Rear mounting bolts are similar.

5. Installation is the reverse of removal. Bleed the entire brake system before driving the car. See **Bleeding Brakes**.

Tightening Torques

- Front brake caliper to strut assembly . 110 Nm (81 ft-lb)
- Rear brake caliper to trailing arm . . . . 67 Nm (50 ft-lb)
- Brake fluid hose to caliper
  M10 coupling . . . . . 14 Nm (10 ft-lb)
  M12 coupling . . . . . 17 Nm (13 ft-lb)
- Road wheel to hub . . . . . 100 ± 10 Nm (74 ± 7 ft-lb)

To remove and install brake rotor

Always replace rotors in pairs.

1. Remove the caliper as described above.

2. Remove the bolt holding the rotor to the wheel hub. See Fig. 10.

3. Inspect the rotor for excessive grooving, cracks, and warping. Check the rotor thickness. See **Table b**.

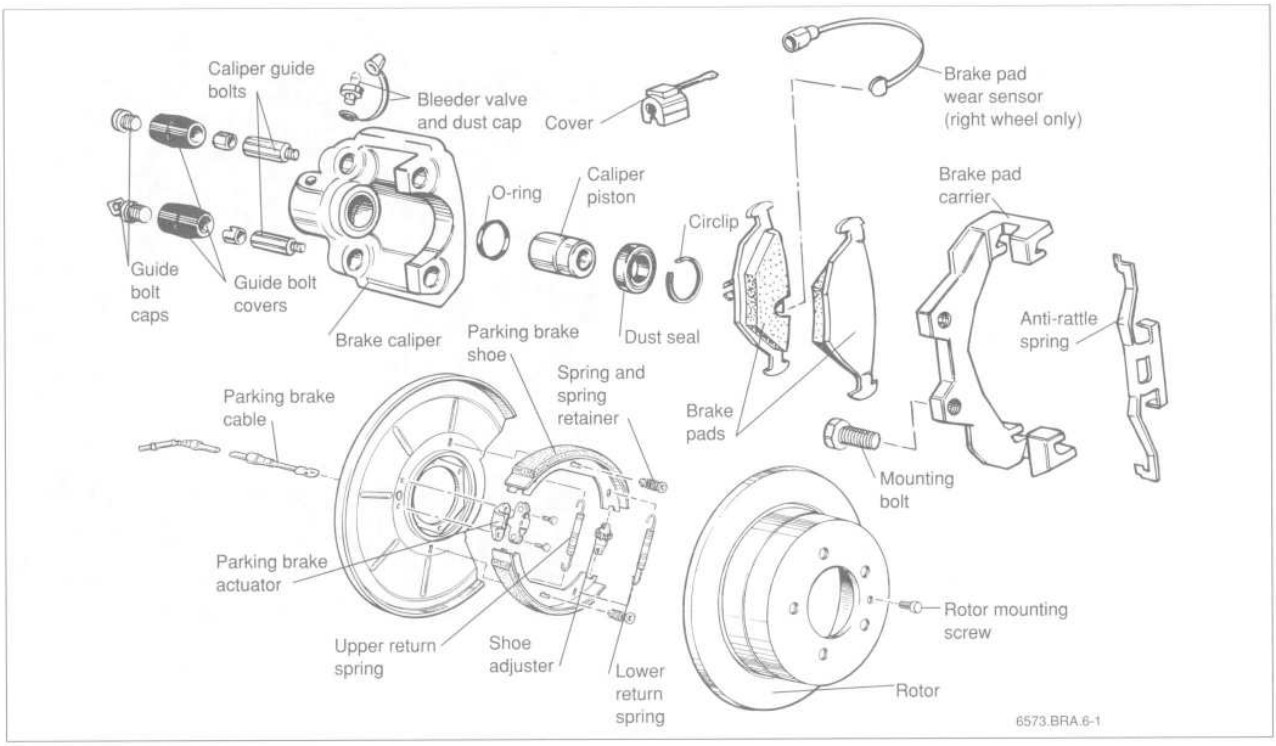

Fig. 9. Rear brake caliper assembly.

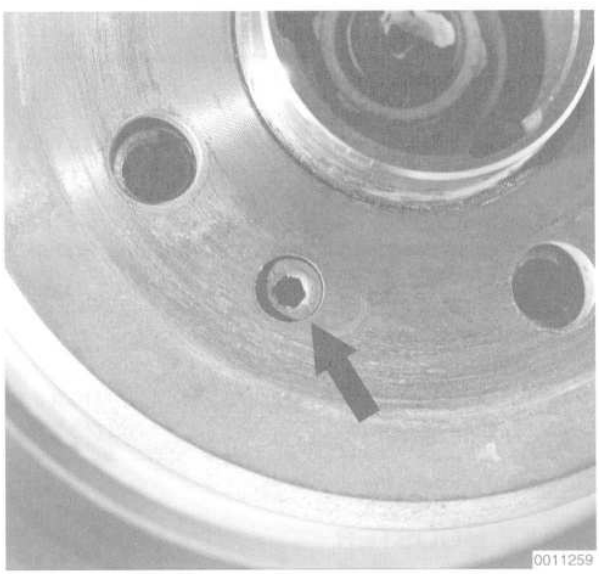

Fig. 10. Brake rotor mounting screw (**arrow**).

NOTE —

On original equipment rotors, the minimum allowable thickness is stamped on the rotor hub. Measure the rotor braking surface with a micrometer at eight to ten different points and use the smallest measurement recorded.

Table b. Rotor Reconditioning Specifications

	front	rear
Wear limit (min. thickness)	20.4 mm (0.803 in.)	8.4 mm (0.331 in.)
Axial runout (max.) rotor removed rotor installed	 0.05 mm (0.002 in.) 0.20 mm (0.008 in.)	 0.05 mm (0.002 in.) 0.20 mm (0.008 in.)

4. Installation is the reverse of removal. Clean the rotor with brake cleaner before installing. If the brake fluid hose was removed or loosened, the entire brake system must be bled as described above under **Bleeding Brakes**. Once the brake assembly is installed depress the brake pedal several times to adjust the caliper and pads.

NOTE —

When installing new rear brake rotors, the parking brake should be adjusted. See **Parking Brake**.

Tightening Torques

- Brake rotor to wheel hub . . . . . 16 Nm (12 ft-lb)
- Front brake caliper to strut assembly. . 110 Nm (81 ft-lb)
- Rear brake caliper to trailing arm . . . . 67 Nm (50 ft-lb)
- Road wheel to hub . . . . . 100 ± 10 Nm (74 ± 7 ft-lb)

MASTER CYLINDER

The brake master cylinder is mounted to the front of the vacuum booster on the driver's side firewall. See Fig. 11.

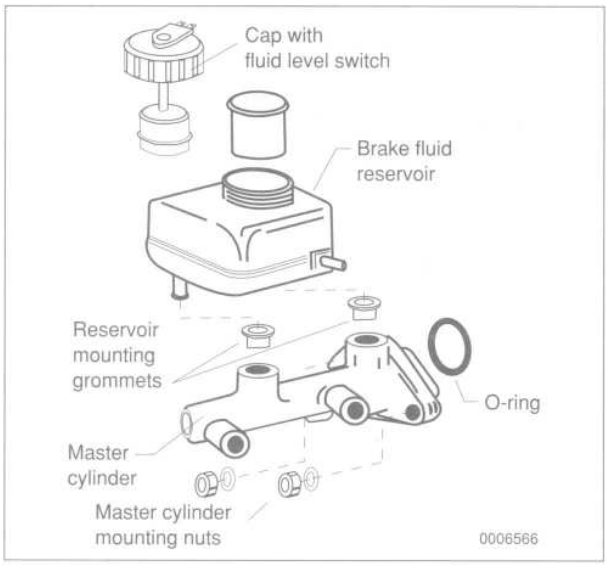

Fig. 11. Master cylinder and related parts.

To remove and install master cylinder

1. Using a clean syringe, empty the brake fluid reservoir.

> ***WARNING —***
> *Brake fluid is highly corrosive and dangerous to the environment. Dispose of it properly.*

2. Disconnect the brake fluid level sender connector from the fluid reservoir cap.

3. On cars with manual transmission, remove the clutch master cylinder supply hose from the side of the fluid reservoir.

4. Disconnect the brake fluid lines from the master cylinder. Unscrew the mounting nuts and remove the master cylinder from the brake booster. See Fig. 12.

5. Make sure all nuts, fluid couplings, thread bores, and mating surfaces are clean.

6. If the fluid reservoir was removed, install it carefully using new sealing grommets.

7. Mount the master cylinder to the brake booster using a new O-ring and new self-locking nuts.

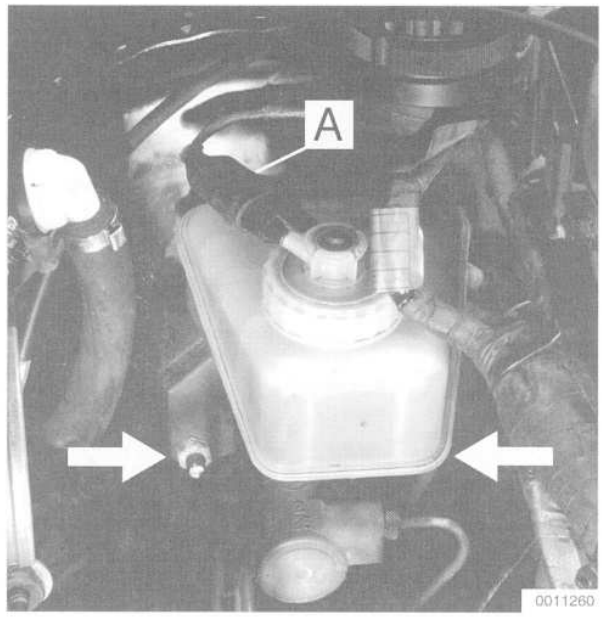

Fig. 12. Brake master cylinder mounting nuts (**arrows**), and brake fluid level sender connector (**A**).

> ***CAUTION —***
> *Use care not to over-torque the master cylinder mounting nuts. This could damage the brake booster and prevent proper vacuum build-up.*

Tightening Torque

- Brake master cylinder to brake booster . . . . . 26 Nm (18 ft-lb)

8. Connect all brake fluid lines and bleed the entire brake system as described above under **Bleeding Brakes**.

Tightening Torque

- Brake fluid line to master cylinder
  M10 coupling . . . . . 14 Nm (10 ft-lb)
  M12 coupling . . . . . 17 Nm (13 ft-lb)

BRAKE BOOSTER

The brake booster is mounted to the firewall on the driver's side of the engine compartment, directly behind the brake master cylinder. Intake manifold vacuum acts on a large diaphragm in the booster to help reduce pedal effort.

To remove and install brake booster

1. Using a clean syringe, empty the brake fluid reservoir.

WARNING —
Brake fluid is highly corrosive and dangerous to the environment. Dispose of it properly.

2. Remove the brake fluid level sender connector from the reservoir cap. On cars with manual transmission, remove the clutch master cylinder supply hose from the side of the reservoir.

3. Disconnect the brake fluid lines from the master cylinder.

4. Disconnect the vacuum hose to the brake booster.

5. On cars with SRS airbag, remove the airbag assembly from the steering wheel. See **320 Steering and Wheel Alignment**.

WARNING —
The SRS airbag is an explosive device and should be treated with extreme caution. Improper handling of the SRS airbag could cause serious injury. Always remove the airbag assembly from the car whenever working near the steering column.

6. Working inside the car, remove the dashboard panel(s) from beneath the steering column to access the pedal assembly.

7. Remove the clip and clevis pin from the brake booster pushrod and disconnect it from the brake pedal lever. See Fig. 13.

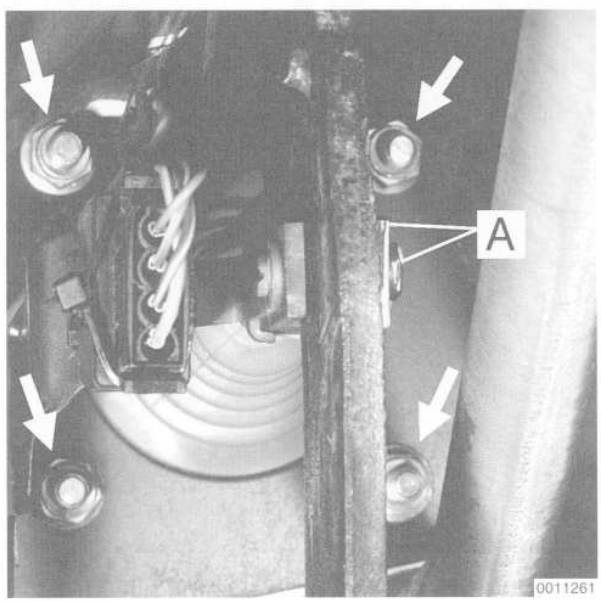

Fig. 13. Brake pedal clevis pin and retaining clip (**A**). Brake booster mounting nuts shown at **arrows**.

8. Remove the brake booster mounting bolts. Working in the engine compartment, remove the brake booster together with the master cylinder.

9. If the booster or the master cylinder O-ring is being replaced, disconnect the booster from the master cylinder.

10. Make sure all nuts, fluid couplings, thread bores and mating surfaces are clean.

11. If necessary, mount the master cylinder to the vacuum booster using a new O-ring and new self-locking nuts.

CAUTION —
Use care not over torque the master cylinder mounting bolts. This could damage the brake booster and prevent proper vacuum build-up.

Tightening Torque
- Brake master cylinder to brake booster . . . . . 26 Nm (18 ft-lb)

12. Mount the brake booster and master cylinder assembly to the firewall using new self-locking nuts.

Tightening Torque
- Brake booster to firewall . . . . . 22 Nm (16 ft-lb)

13. Connect the brake pedal lever to the booster pushrod. Make sure the clevis pin retaining clip is correctly installed.

14. Connect all brake fluid lines and bleed the entire brake system as described in **Bleeding Brakes**.

15. Connect the vacuum line to the vacuum booster.

Tightening Torques
- Brake fluid line to master cylinder
  M10 coupling . . . . . 14 Nm (10 ft-lb)
  M12 coupling . . . . . 17 Nm (13 ft-lb)

NOTE —
When replacing the brake booster non-return valve or the vacuum hose, install the valve so that the molded arrow on the valve is pointing towards the intake manifold. Use new hose clamps.

16. Adjust brake pedal height as described below.

17. If applicable, install the SRS airbag. See **721 Airbag System (SRS)**.

18. Start the engine and check that the SRS light functions correctly and that the brake lights work properly. Recheck brake pedal height.

BRAKE PEDAL

To adjust brake pedal height (except cars with M60 engine)

To adjust pedal height, gain access to the top of the pedal cluster by removing the pedal cluster trim panel, as described in **513 Interior Trim**. Once the trim panel is removed, loosen the lock-nut on the pushrod clevis and slowly turn the pushrod until the correct dimension is obtained. See Fig. 14.

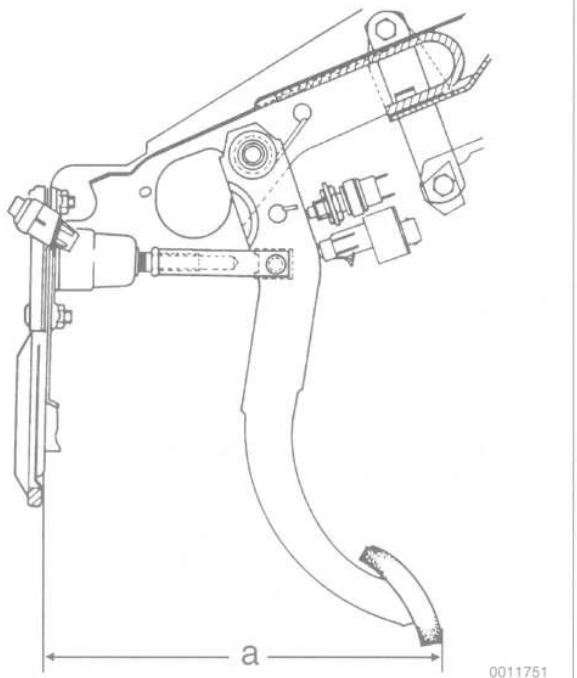

• **Dimension a**: 245–255 mm (9.65–10.00 in.)

0011751

Fig. 14. Brake pedal assembly. Adjust pedal height to dimension **a**.

PARKING BRAKE

The parking brake is a dual drum system integrated into the rear wheel brake rotors. See Fig. 15.

Parking brake shoe replacement is not normally required, but periodic adjustment of the shoes may be necessary from time to time to compensate for wear. The parking brake should also be adjusted anytime the cable, the rear brake rotor, or the parking brake shoes are replaced.

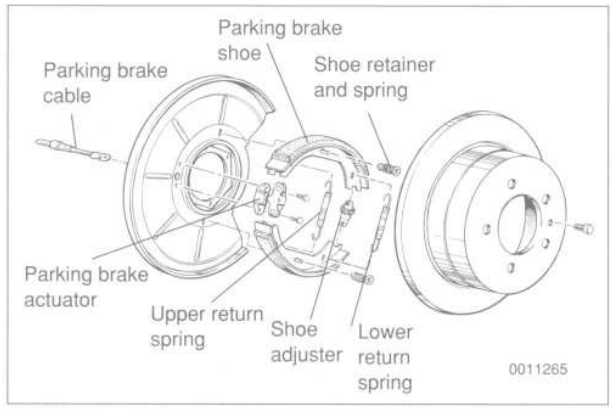

Fig. 15. Parking brake assembly.

To adjust parking brake

The parking brake can be adjusted with the wheels installed, although the rear of the car will need to be lifted slightly to spin the rear wheels.

1. Lift the parking brake lever boot out of the console. While holding the cables stationary, loosen the parking brake cable nuts until they are completely slack. See Fig. 16.



Fig. 16. Parking brake cable adjusting nuts (**arrows**).

2. Raise the rear of the car.
3. Remove one lug bolt from each rear wheel.

WARNING —
Make sure the car is firmly supported on jack stands designed for the purpose. Place the jack stands beneath a structural chassis point. Do not place jack stands under suspension parts.

4. Then turn the road wheel until the lug bolt hole lines up with the parking brake adjuster.

5. Using a screwdriver, turn the adjuster to expand the brake shoes until the road wheel can no longer turn, then back the adjuster off about eight (8) notches. Repeat the procedure on the other rear wheel. See Fig. 17.

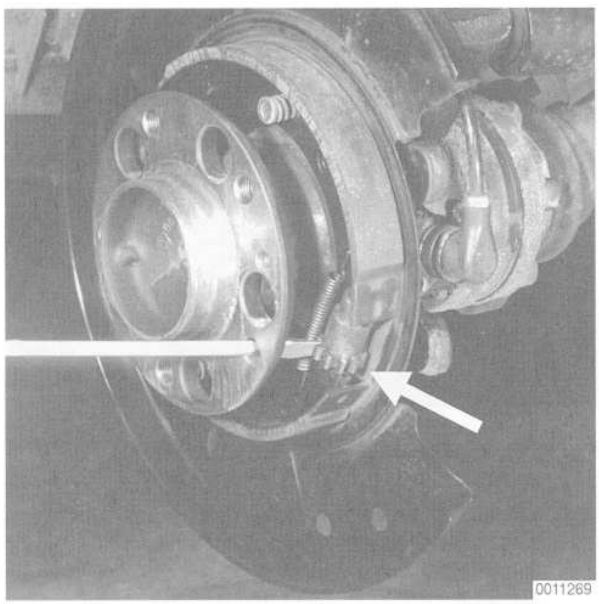

Fig. 17. Parking brake adjuster (**arrow**) being turned using screwdriver. Rear wheel and brake rotor shown removed.

6. Working inside the car, set the parking brake several times to seat the cable. Then pull the parking brake lever up four notches. Tighten the cable adjusting nuts until it is just possible to turn the rear wheels with slight resistance.

7. Release the lever and make sure the rear wheels turn freely.

8. Turn on the ignition. With the parking brake lever released, the instrument panel warning light should be off. Check that the light comes on as soon as the lever is pulled up.

9. Install the parking brake lever boot. Install the road wheel lug bolts.

Tightening Torque
- Road wheel to hub . . . . . 100 ± 10 Nm (74 ± 7 ft-lb)

To remove and install parking brake shoes

1. Raise the rear of the car.

WARNING —
Make sure the car is firmly supported on jack stands designed for the purpose. Place the jack stands beneath a structural chassis point. Do not place jack stands under suspension parts.

2. Without disconnecting the brake fluid hose, remove rear brake calipers from the trailing arms. Remove the rear brake rotors. See **Brake Pads, Calipers, and Rotors**.

CAUTION —
Do not let the brake caliper assembly hang from the brake hose. Support it from the chassis with strong wire.

3. Unhook the upper return spring from the brake shoes. Remove the shoe retainers by pushing them and rotating 90°. See Fig. 18.

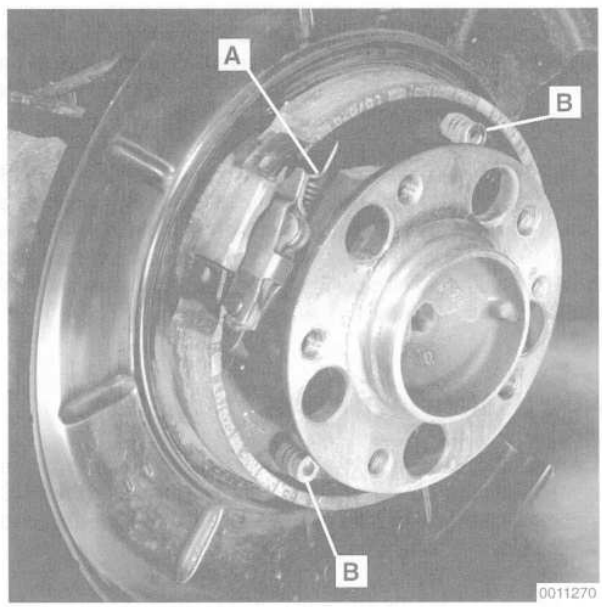

Fig. 18. Parking brake upper return spring (**A**) and shoe retainers (**B**).

4. Spread the shoes apart at the top and lift them out from below.

NOTE —
When removing the brake shoes the shoe expander pivot pin may fall out.

5. Inspect the shoe expander to make sure it functions properly. Apply a thin coat of grease to sliding parts and pins.

6. Installation is the reverse of removal. Be sure to adjust the parking brake cables as described earlier.

To replace parking brake cable

1. Remove the rear brake caliper and rotor. See **Brake Pads, Calipers, and Rotors**.
2. Remove the parking brake shoes as described above.
3. Remove the parking brake cable from the cable holder on the trailing arm.
4. Working inside the car, lift the parking brake lever boot out of the console. Remove the cable adjusting nut. See Fig. 16.
5. Slide the cable out of the housing and install a new cable.
6. The remainder of installation is the reverse of removal. Adjust the parking brake as described above.

ANTILOCK BRAKE SYSTEM (ABS)

The ABS system is designed to be maintenance free. There are no adjustments that can be made to the system. Repair and troubleshooting of the major ABS system components requires special test equipment and knowledge and should be done by an authorized BMW dealer using the special ABS test equipment.

ABS is self-tested each time the car is started by the ABS diagnostic unit. Once the test is complete, the ABS dashboard light turns off. If the ABS dashboard light remains lit or comes on at any time during driving, a system fault has occurred and the ABS system is electronically disabled. The conventional braking system remains fully functioning.

ABS System Inspection

A visual inspection of the ABS system may help to locate system faults. If no visual faults can be found and the ABS light remains on, have the system diagnosed by an authorized BMW dealer.

Carefully inspect the entire ABS wiring harness, particularly the pulse sensor harnesses and connectors near each wheel. Look for chafing or damage due to incorrectly routed wires.

Remove the pulse sensors and clean the sensor tips. Inspect the toothed pulse rings for missing teeth or other damage. Check the rings for dirt, brake pad dust accumulation, or heavy rust deposits that could alter the clearance between the sensor tip and the ring.

NOTE —
If a toothed ring is damaged, the entire wheel hub with integral wheel bearing must be replaced. See **310 Front Suspension** *or* **330 Rear Suspension**.

To replace ABS pulse sensor

1. Raise the front of the car.

> ***WARNING —***
> *Make sure the car is firmly supported on jack stands designed for the purpose. Place the jack stands beneath a structural chassis point. Do not place jack stands under suspension parts.*

2. Unscrew the pulse sensor mounting bolt. Remove the sensor from its housing. Remove the harness from any retaining mounts. See Fig. 19.

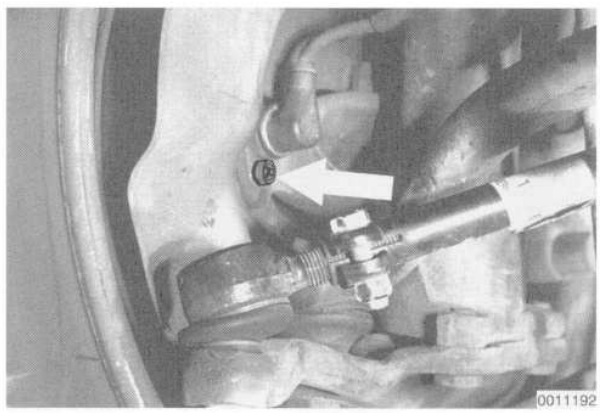

Fig. 19. Front ABS pulse sensor mounting bolt (**arrow**).

3. Working in the engine compartment (front wheel sensors) or under the rear seat (rear wheel sensors), disconnect the pulse sensor connector and remove the sensor from the car. See Fig. 20.

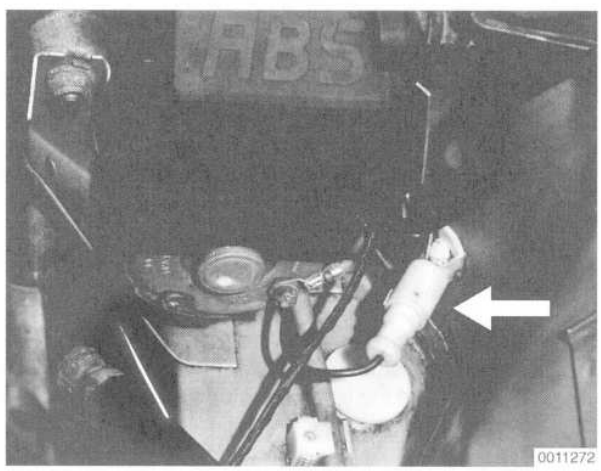

Fig. 20. Front ABS pulse sensor harness connector (**arrow**).

4. Apply a thin coat of Molykote Longterm 2 or an equivalent grease to the pulse sensor and housing. The remainder of installation is the reverse of removal.

400 Body—General

GENERAL 400-1
BODY ASSEMBLY 400-1
INTERIOR EQUIPMENT 400-2

GENERAL

This general information group covers basic body information and system descriptions for the repair groups found in **4 Body** and **5 Body Equipment**.

When working or servicing cars equipped with SRS, the following precautions must be observed to prevent injury.

> ***WARNING —***
> - *The airbag(s) are inflated by an explosive device. Handled improperly or without adequate safeguards, the system can be very dangerous. Special precautions must be observed prior to any work at or near the steering wheel or steering column, including the pedal assembly.*
> - *Always disconnect the battery and cover the negative (–) battery terminal with an insulator before starting diagnostic, troubleshooting or service work on cars fitted with SRS, and before doing any welding on the car.*

BODY ASSEMBLY

The E34 chassis was introduced in North America in 1989. It replaced the 1982–1988 E28 5-Series while retaining many of the typical BMW visual accents such as the twin kidney center grille and the trademark dual round headlights. The aerodynamically efficient 5-Series with a coefficient of drag (CD) of 0.31 achieves unprecedented levels of performance and handling. The E34 5-Series is 18% more efficient in moving through the air as compared to the E28 chassis. See Fig. 1.

Through advanced computer simulation models, a high level of body rigidity, functionality, and safety was achieved without the addition of extra weight. See Fig. 2. This allows the suspension to work more accurately from a firmer platform.

Many of the body sections have been combined into single large stampings, resulting in improved production and quality standards. The side frame members are constructed of one piece. Optimized high-technology joining techniques help to reduce the total number of welded and brazed joints.

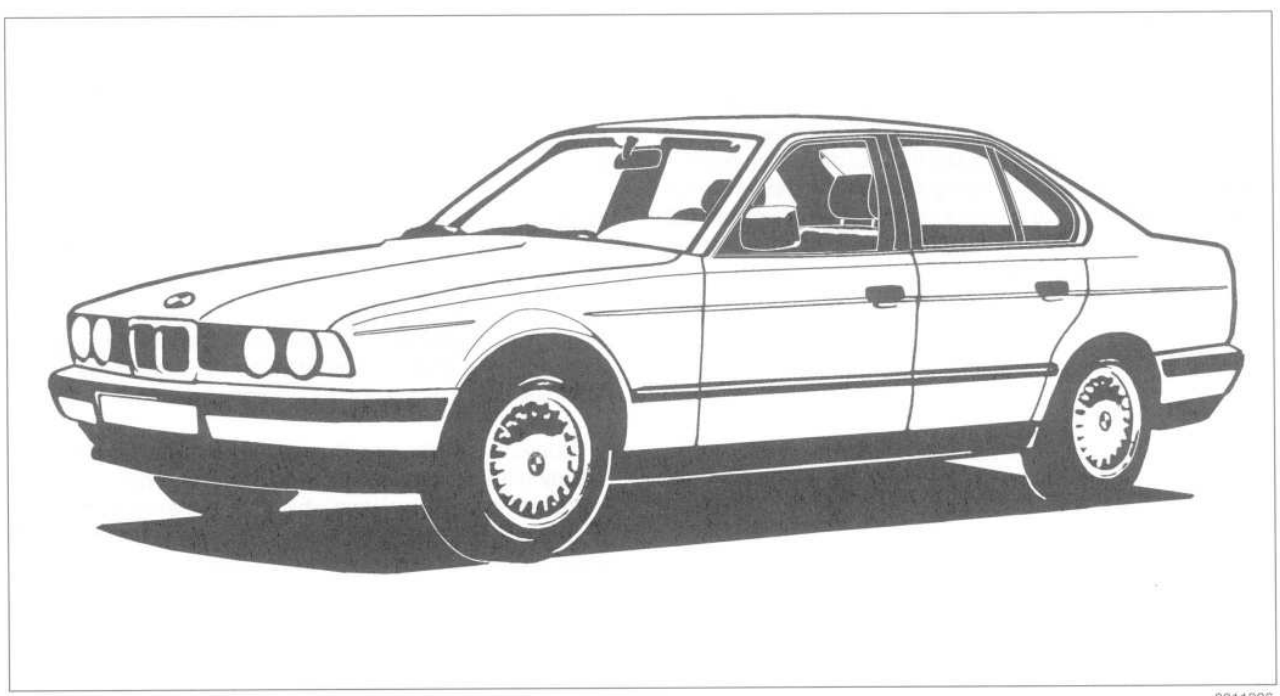

0011926

Fig. 1. The aerodynamically efficient E34 5-Series sedan.

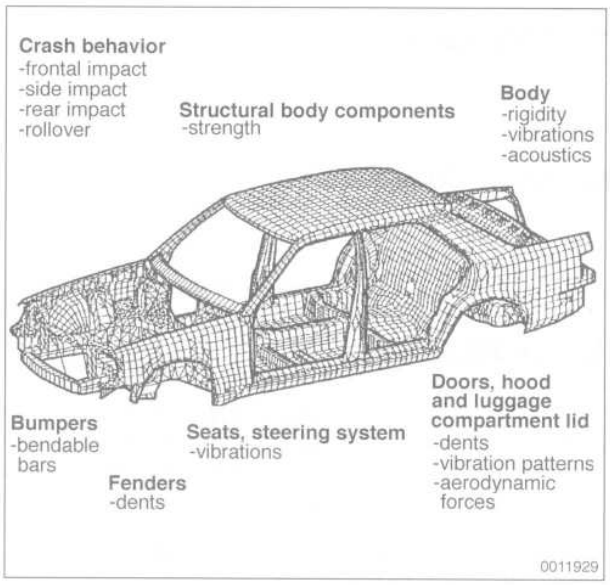

0011929

Fig. 2. Advanced computer simulation models used to calculate static, dynamic, and acoustic body characteristics.

The hood is front-hinged and prevented from sliding back in an accident by retaining hooks. The hood, trunk, front doors and rear doors open to extremely wide angles (64°, 90°, 68° and 66° respectively). The trunk lid opening extends almost down to the bumper for easy loading and unloading. These bolt-on components, including the front fenders, are easily replaced.

The unitized body forms a very rigid passenger compartment, with large crumple zones in the front and rear for energy absorption during a collision. Passive safety has been increased by providing body deformation and strength characteristics that comply with 35 mile-per-hour frontal crash regulations. Damage to load bearing structural components is reduced at impact speeds of up to 9 m.p.h. by self-regenerating bumpers, impact dampers and sheet-metal deforming components in the front energy-absorbing zone. The bumpers are fully self-regenerating up to an impact speed of approximately 2.5 m.p.h. Generous body side member cross-sections improve resistance to side swiping impacts.

INTERIOR EQUIPMENT

The E34 interior is designed with a high standard of driving ergonomics. The car's overall dimensions provide ample interior space and freedom of movement, particularly for rear-seat passengers. Fig. 3 shows the body dimensions for the sedan body style. Dimensions for the Touring models are similar.

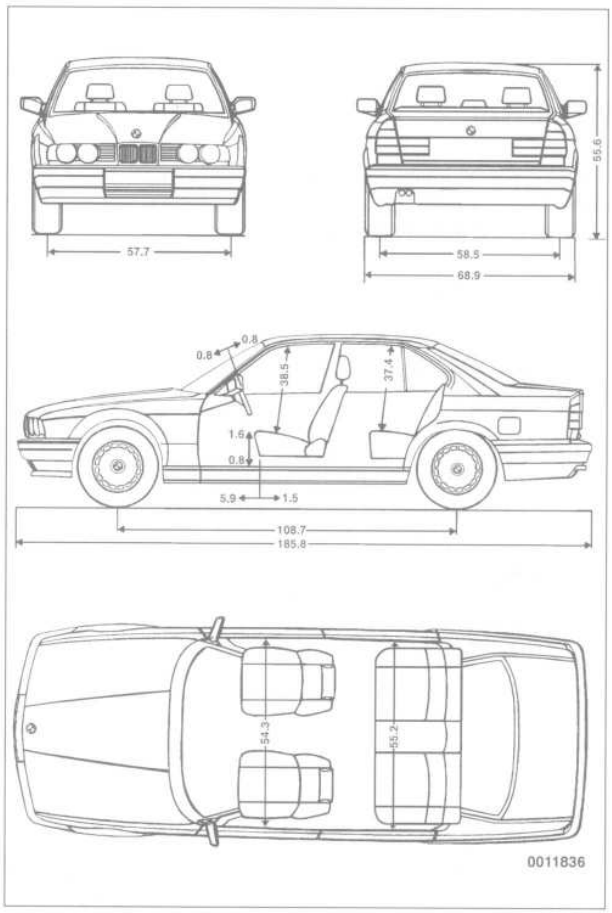

0011836

Fig. 3. E34 sedan body dimensions.

The bonded, flush windshield and rear window have been significantly enlarged from its predecessor. Green-tinted heat-insulating glass is standard on all models. All-around vision from the driver's seat ensures full awareness of surrounding conditions and enhanced driving safety.

All interior switches are illuminated and switch functions are clearly marked with identification symbols. Trim panels and surfaces have soft finishes which are pleasant to the touch. Ample storage space for odds and ends is provided. The glove box is lockable using the car's one-key system.

The one-piece molded roof lining is constructed from a sound-absorbing material. Interior roof mounted grab handles can be hinged down as necessary. All trim pieces have been optimized for minimum noise levels and function as part of a harmonious overall design theme.

Anatomically-correct seats are constructed from polyurethane foam, with zones of different firmness. The front seat bases have additional steel springs for added support and strength. The 10-way power seats are provided with conveniently located switches along the outside edge of the seat.

The upper seat belt anchors on the B-pillar adjust automatically in height when the front seats are moved forward and back. An ergonomically positioned rear seat-belt system has the latches on the outside for a much improved, safer belt position for the rear seat occupants.

The padded dashboard houses the instrument cluster and the ventilation and heating system. The instrument cluster is removable as a unit without removing the dashboard. All electrical repairs to the instrument cluster are covered in **620 Instruments**.

The electronically controlled heating and air conditioning system provides separate controls for the driver and front passenger. An extra large, infinitely variable radial blower motor provides perfect distribution of air. Fresh air enters through the grille below the engine hood and into the passenger compartment via the dashboard and front and rear footwell vents. The interior air is extracted through vents located in the rear of the vehicle, behind the bumper covers. Fig. 4 shows the ventilation plan for the HVAC system.

Convenience is an integral part of the 5-Series. For ease and safety when entering the car at night, the interior lights are switched on by pulling up on the driver's door handle, which also activates a heating element for lock de-icing. The interior light is switched on every time the engine is turned off if the exterior lights were previously turned on. The interior lights will stay on for 20 seconds after closing the doors and will automatically turn themselves off if left on for more than 15 minutes.

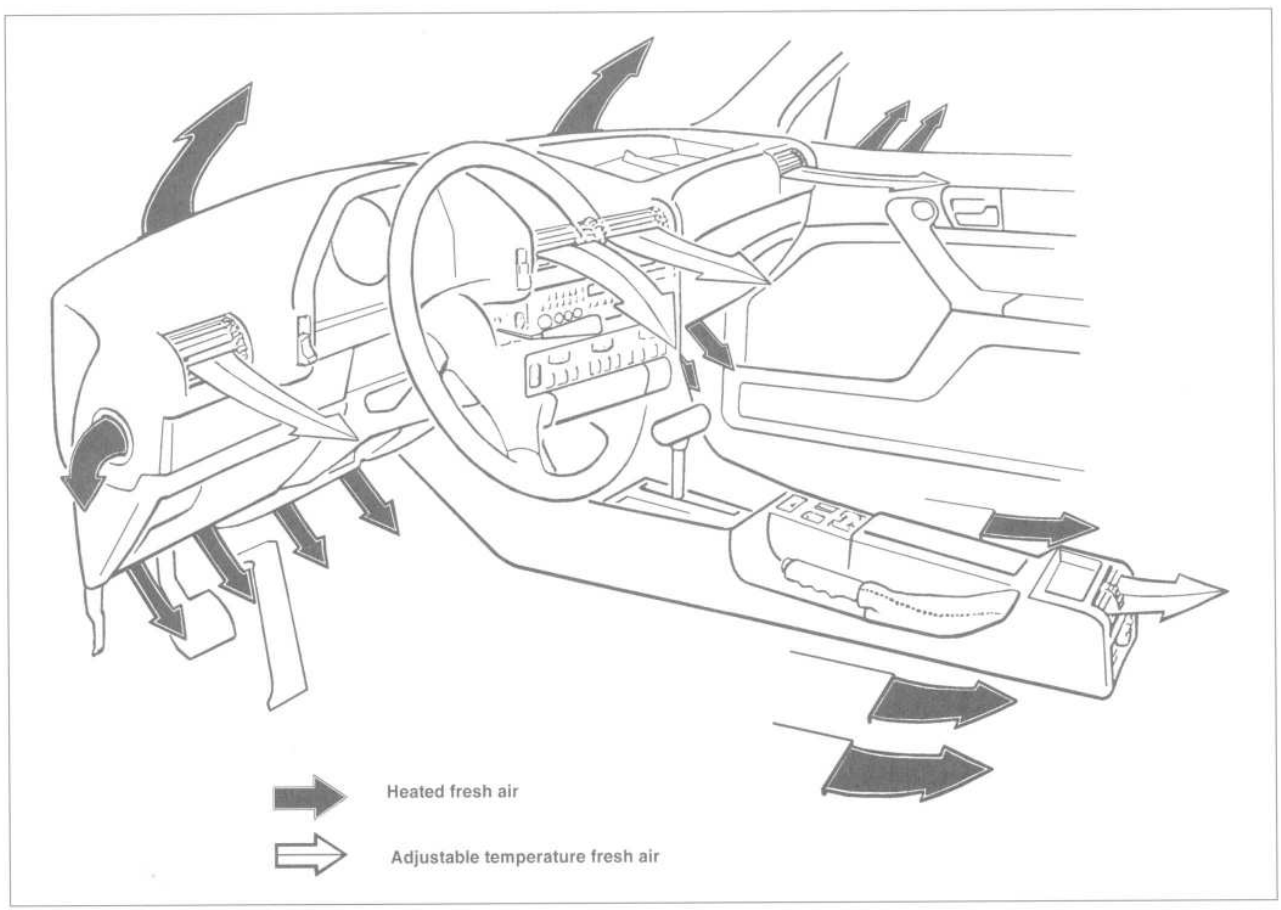

Fig. 4. Heating and air conditioning ventilation plan.

Washer fluid level switch, replacing

Washer fluid level switch is mounted in the fluid reservoir, near the bottom of the container.

NOTE —
Check wire leads at switch for worn insulation and corrosion. Check electrical contacts in harness connector for corrosion.

1. Open hood or tailgate, as applicable.
2. On Touring models, remove right rear trim panel.
3. Remove reservoir retaining screw(s). Loosen reservoir from mount and pull up slightly to access washer fluid level switch.
4. Unplug harness connectors for washer fluid level switch and pump.

CAUTION —
Be careful when pulling harness connector off washer fluid pump. The pump can easily pull out of the rubber grommet resulting in spilled washer fluid.

5. Empty washer fluid reservoir.
6. Pull fluid level switch out from rubber grommet. See Fig. 23.

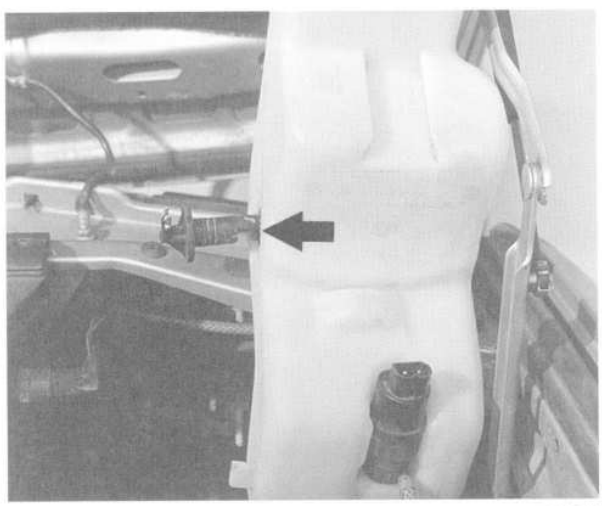

0011794

Fig. 23. Windshield washer fluid level switch (**arrow**) shown partially removed.

7. Install new switch into reservoir.

612 Switches and Electrical Accessories

GENERAL 612-1

INTERIOR SWITCHES 612-1
Steering column stalk switches, removing and installing 612-1
Ignition switch, removing and installing. 612-2
Ignition lock cylinder, removing and installing. 612-2
Hazard warning switch, removing and installing 612-3
Light switches, removing and installing 612-3
Power window switch assembly, removing and installing. 612-3
Outside mirror switch, removing and installing. 612-4

INTERIOR LIGHTS 612-4
Dome light, map lights, rear lights, and trunk lights, replacing bulbs 612-4

GENERAL

When working on electrical switches, always disconnect the negative (–) cable from the battery and insulate the cable end to prevent accidental re-connection.

NOTE —

- *On 1992 and later cars, the battery is mounted beneath the rear seat.*
- *Testing and replacement information for the transmission gear position/neutral safety switch is covered in* **250 Gearshift Linkage**.
- *Testing and replacement information for the oil pressure and oil level switches is covered in* **119 Lubrication System**.

INTERIOR SWITCHES

Most of the interior switches are removed by carefully prying them from their cavity in the instrument panel or console. Notable exceptions are the steering column stalk switches as well as a few other interior switches. These exceptions are covered in the text below.

NOTE —

To prevent damaging or marring interior trim and interior plastic parts, wrap the tips of screwdrivers and pliers with plastic tape before prying out switches or electrical accessories.

Steering column stalk switches, removing and installing

Removal of the steering column switches requires removal of the steering wheel and the SRS driver's side airbag (on cars so equipped). Use extreme caution when removing the airbag unit from the steering wheel and be sure to follow the airbag removal procedure given in **721 Airbag System (SRS)**. Improper handling of the airbag could cause serious injury.

WARNING —

The airbag is an explosive device and should be treated with extreme caution. Improper handling of the airbag could cause serious injury or death. Store the airbag with the horn pad facing up. If stored facing down, accidental deployment could propel it violently into the air, causing injury.

1. Disconnect negative (–) battery cable and cover battery terminal with an insulating material.
2. On cars with driver's side airbag, remove airbag unit from steering wheel. See **721 Airbag System (SRS)**. Store airbag unit in a safe place.
3. On cars without driver's side airbag, remove screws retaining lower steering column cover and remove lower cover.

NOTE —

On cars with driver's side airbag, the lower steering columnb cover is removed as part of the airbag removal procedure.

4. With front wheels pointed straight ahead, remove steering wheel. See **320 Steering and Wheel Alignment**.
5. Remove trim panel from lower left side of instrument panel. See **513 Interior Trim.**
6. Remove upper steering column cover from steering column. See Fig. 1.

NOTE —

Steering column cover fastener types and locations may vary slightly from model to model.

7. Depress stalk switch retaining hooks and remove switch. See Fig. 2. Disconnect harness connector(s).

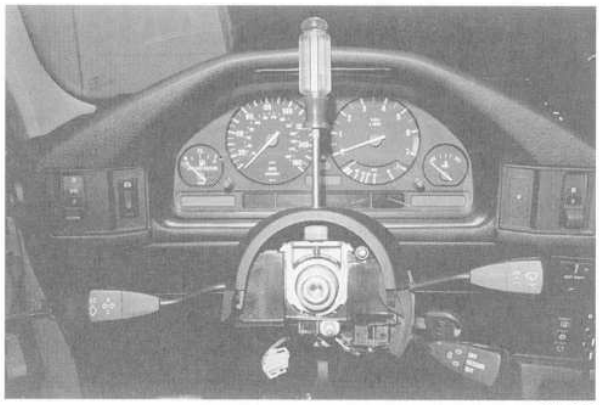

0011803

Fig. 1. Upper steering column trim cover retaining screw being removed. Some models may have retaining pins instead of screw.

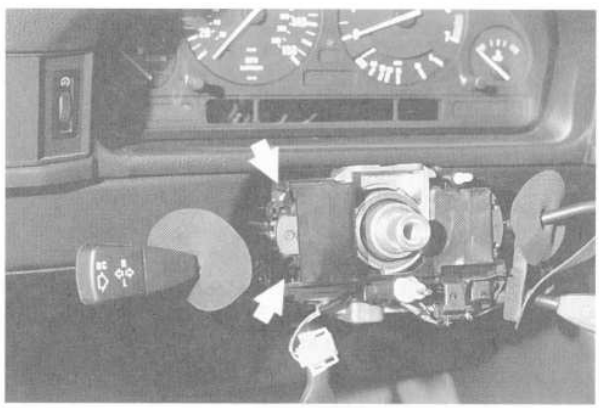

0011805

Fig. 2. Turn signal/headlight dimmer switch locking clips (**arrows**). Cruise control stalk switch is similar.

8. Installation is reverse of removal. Install airbag unit as described in **721 Airbag System (SRS)**.

> ***WARNING —***
> *Once the airbag unit is installed and all other service procedures have been completed, start the engine and check that the SRS warning light goes out. If the warning light stays on, the SRS system will not function as designed. Have the system diagnosed and repaired by an authorized BMW dealer.*

> ***CAUTION —***
> *On steering wheels mounted with a nut, use a new self-locking nut when mounting the steering wheel. The nut is designed to be used only once.*

Tightening Torques

- Steering wheel to steering column spindle
  self-locking nut (always replace) . . . . 80 Nm (59 ft-lb)
  bolt . . . . . 63 Nm (46 ft-lb)

Ignition switch, removing and installing

1. Disconnect negative (–) battery cable and cover terminal with an insulating material.
2. Remove lower left dash panel.
3. Remove screws retaining lower steering column cover and remove cover. See Fig. 1.
4. Press retaining clips on both sides of switch, remove switch and disconnect electrical connector. See Fig. 3.

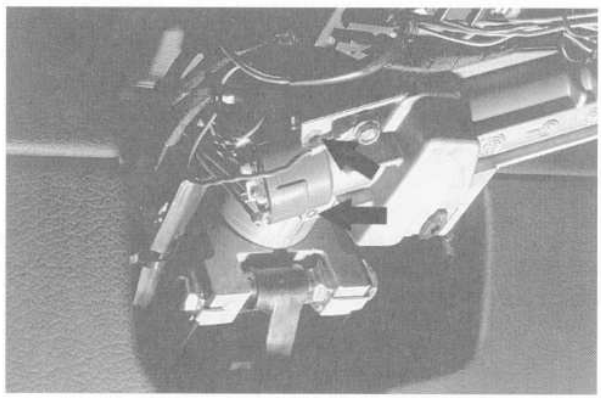

0011806

Fig. 3. Ignition switch retaining screws (**arrows**). Some models use retaining clips instead of screws.

5. Installation is reverse of removal. Before mating ignition switch to ignition lock, check that switch is in correct position relative to ignition lock.

Ignition lock cylinder, removing and installing

1. Insert master key into lock cylinder and turn the key 60° to "Radio" position. See Fig. 4.

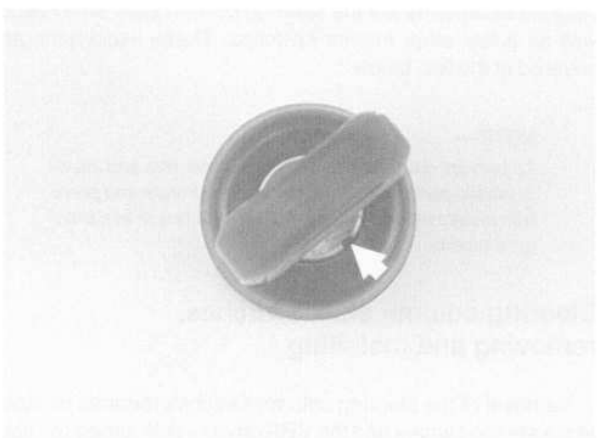

0011807

Fig. 4. With ignition key in "radio" position (60° from "off"), insert stiff wire into lock opening (**arrow**) to release cylinder.

2. Insert a thin piece of stiff wire into opening in lock cylinder and pull lock cylinder out. See Fig. 5.

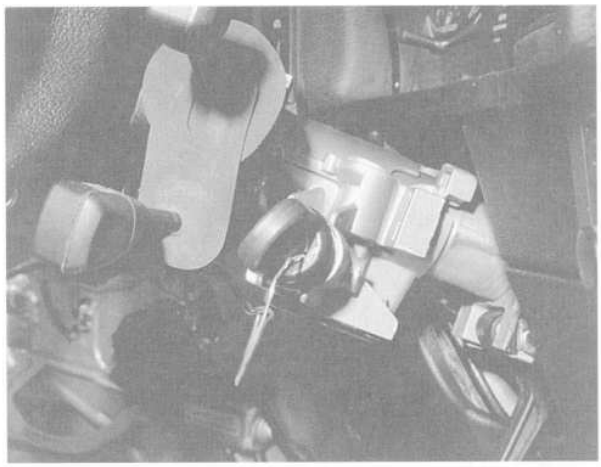

0011808

Fig. 5. Lock cylinder being released.

Hazard warning switch, removing and installing

1. Remove power window switch. See **Power window switch assembly, removing and installing**
2. Working from underneath center console, push hazard warning switch up out of console.
3. Disconnect harness connector from switch.
4. Installation is reverse of removal.

Light switches, removing and installing

The procedure given below applies to the light switches in the instrument panel (headlight switch, fog light switch, headlight dimmer switch).

1. Push switch to right and insert a thin strip of metal (1.0 mm feeler gauge) to disengage switch frame locking tab. See Fig. 6.
2. Remove switch frame with switches from instrument panel.
3. Disconnect harness connector from applicable switch and push switch forward out of switch frame.
4. Installation is reverse of removal. Engage switch frame using a feeler gauge as shown earlier.

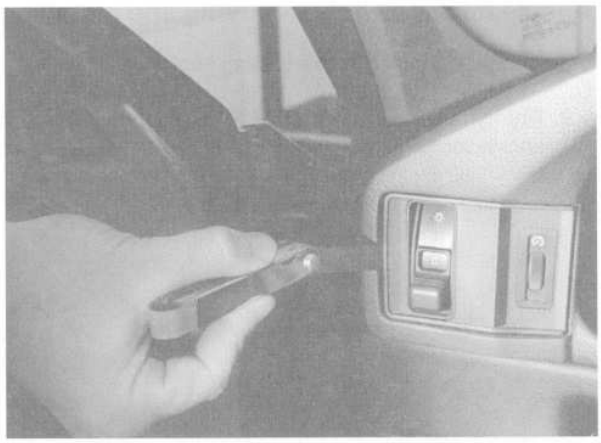

0011809

Fig. 6. Feeler gauge being used to release switch frame locking tab.

Power window switch assembly, removing and installing

1. Pry switch from console by carefully prying at left and right sides. See Fig. 7.

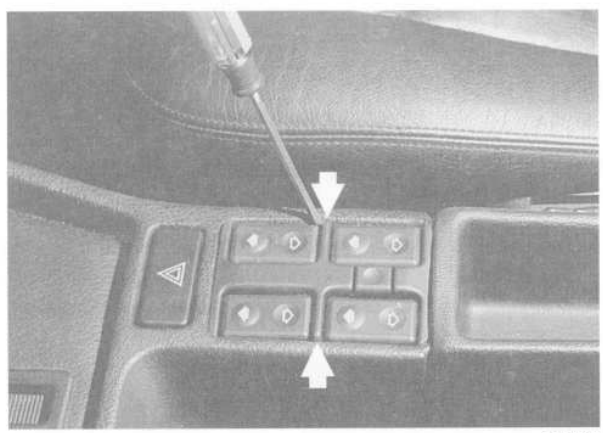

0011810

Fig. 7. Window switch being removed from center console. Pry switch alternately at left and right sides (**arrows**) to remove.

2. Disconnect harness connector from switch assembly.
3. Installation is reverse of removal. Note installation direction of harness connector.

Outside mirror switch, removing and installing

1. Carefully pry off mirror adjusting knob.

2. Pry mirror switch from arm rest. Disconnect harness connector from switch. See Fig. 8.



0011811

Fig. 8. Outside mirror switch being removed from door arm rest.

INTERIOR LIGHTS

Dome light, map lights, rear lights, trunk lights, replacing bulbs

1. Pry dome light out from left side. Release the locking blade and swing back reflector. Spread apart the contact blades to remove bulb. See Fig. 9.

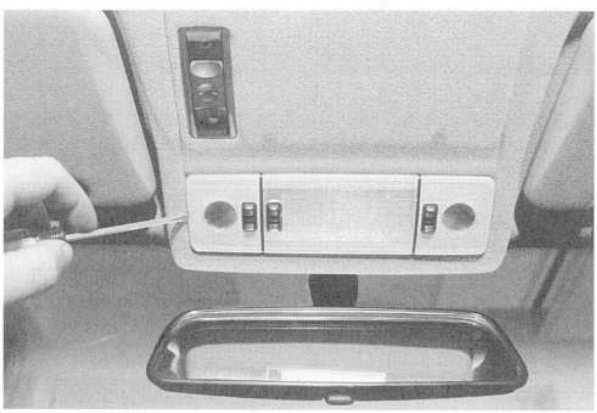

0011854

Fig. 9. Dome light assembly being removed.

2. Pry rear light out with small screwdriver, remove the reflector and replace the bulb. See Fig. 10.

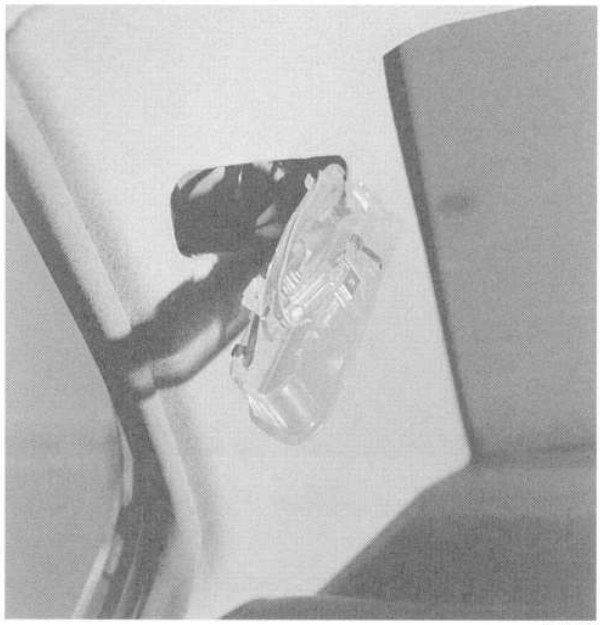

0011855

Fig. 10. Rear light assembly shown removed.

3. Use a screwdriver to carefully pry off trunk light lens and replace the bulb. See Fig. 11.

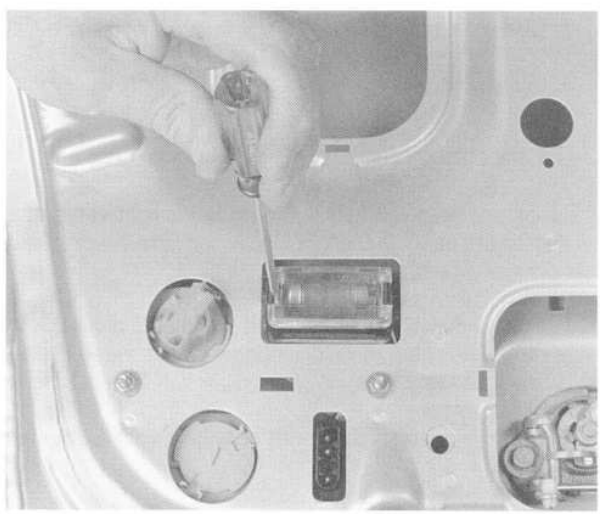

0011856

Fig. 11. Trunk light lens being removed.

Interior Light Bulb Wattages

- Dome light . . . . . 15 watts
- Map light . . . . . 10 watts
- Rear light . . . . . 10 watts
- Trunk light . . . . . 10 watts

620 Instruments

GENERAL 620-1

INSTRUMENT CLUSTER
Instrument cluster, self-testing 620-1
Instrument cluster, removing and installing. . . 620-2
Instrument cluster, disassembling and assembling 620-2
Instrument cluster bulbs, replacing 620-4
Odometer coding plug, replacing (cars built up to Feb. 1989) 620-4
Odometer coding plug, replacing (cars built Feb. 1989 and later) 620-5
Vehicle speed sender, replacing 620-5
On-board computer, removing and installing . . 620-6

TABLE
a. Instrument Cluster Self-Test Diagnostics (cars built Feb. 1989 and later) 620-2

GENERAL

NOTE —

- *On 1992 and later cars, the battery is mounted beneath the rear seat.*
- *A quick check of the temperature gauge and its electrical circuit is given in* **170 Radiator and Cooling System**. *Use this procedure to diagnose a faulty temperature gauge*

INSTRUMENT CLUSTER

Two versions of instrument clusters are used on the E34 cars. On cars built up to February 1989, the original "Standard" cluster was installed. On cars built after this date, a redesigned cluster was installed. The two clusters are not interchangeable. On the standard cluster, the odometer coding plug is in the main harness connector in the wiring loom. On the redesigned cluster, the odometer coding plug is integrated within the instrument cluster itself.

When servicing the instrument cluster, always disconnect the negative (–) cable from the battery and insulate the cable end to prevent accidental re-connection.

NOTE —

- *If the battery has failed or become disconnected, it may be necessary to reset the language designation of Check Control display to English U.S. Whenever the battery is disconnected, the instrument cluster check control display defaults to English U.K. To change English U.S., turn the ignition to the "Radio On" position. Press the Check Control button on the right side of the instrument cluster until the designated language appears. Release the Check Control button and repeat the process until the correct language is displayed.*
- *If there is a difference between MPG Check Control display and the OBC IV display, the OBC IV will have to be reset by disconnecting the battery for one minute.*

Instrument cluster, self-testing

It is possible to perform a cluster system test and display system test information. On clusters manufactured Feb. 1989 and later, the self test also includes a dynamic test of the instruments.

1. With the ignition off, press and hold Check Control button on right side of instrument cluster.
2. While holding down Check Control button, turn ignition to the ON position.
3. Release Check Control button. Instrument cluster self test information will be displayed. See **Table a**.

Table a. Instrument Cluster Self-Test Diagnostics (cars built Feb. 1989 and later)

Self-test information	Typical self-test readout (example from 1991 525i)
Internal BMW no.	8351832
Coding plug no.	24231
K number	7296
Chassis no.	BJ65571
Software version	0.95
Internal modification index	20

Instrument cluster, removing and installing

Removal of the instrument cluster requires removal of the steering wheel and the SRS driver's side airbag (on cars so equipped). Use extreme caution when removing the airbag unit from the steering wheel and be sure to follow the airbag removal procedure as outlined in **721 Airbag System (SRS)**. Improper handling of the airbag could cause serious injury.

> ***WARNING —***
> *The airbag is an explosive device and should be treated with extreme caution. Improper handling of the airbag could cause serious injury or death. Store the airbag with the horn pad facing up. If stored facing down, accidental deployment could propel it violently into the air, causing injury.*

1. Disconnect negative (–) battery cable and cover terminal with an insulating material.
2. On cars with driver's side airbag, remove airbag unit from steering wheel. See **721 Airbag System (SRS)**. Store the airbag unit in a safe place.
3. With front wheels pointed straight ahead, remove steering wheel. See **320 Steering and Wheel Alignment**.
4. Remove instrument cluster retaining screws. See Fig. 1.
5. Place a towel over steering column. Carefully tilt top of cluster forward out of dash panel. Unlock and disconnect harness connectors from back of cluster. See Fig. 2.
6. Installation is the reverse of removal. Install the airbag to the steering wheel as described in **721 Airbag System (SRS)**. Reconnect negative (–) battery cable last, once all harness connectors have been reconnected.

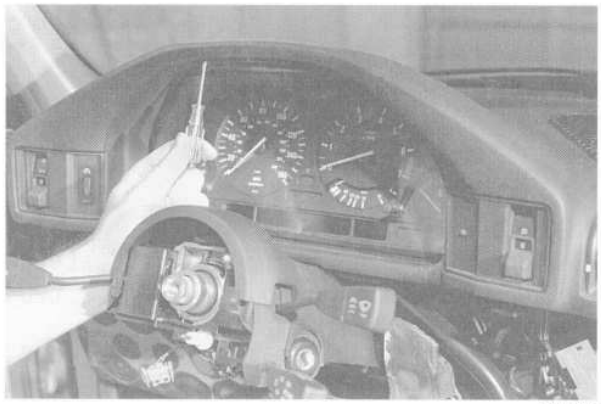

0011803

Fig. 1. Instrument cluster retaining screws being removed.

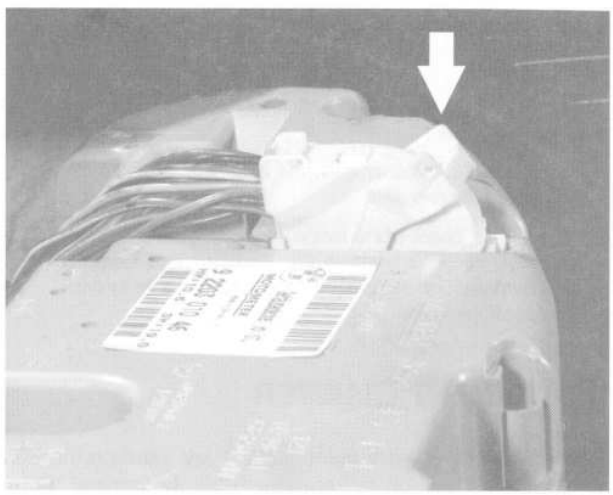

0013178

Fig. 2. Pull up on locking lever (**arrow**) to release instrument cluster connector. Locking lever must be in up position before installing connector.

Instrument cluster, disassembling and assembling

Individual instruments, illumination bulbs, and the LCD module are available from an authorized BMW dealer as replacement parts.

A view of the instrument cluster components is shown in Fig. 3.

1. Remove instrument cluster as described earlier.
2. Pull off odometer reset button and Check Control button from front of instrument cluster.

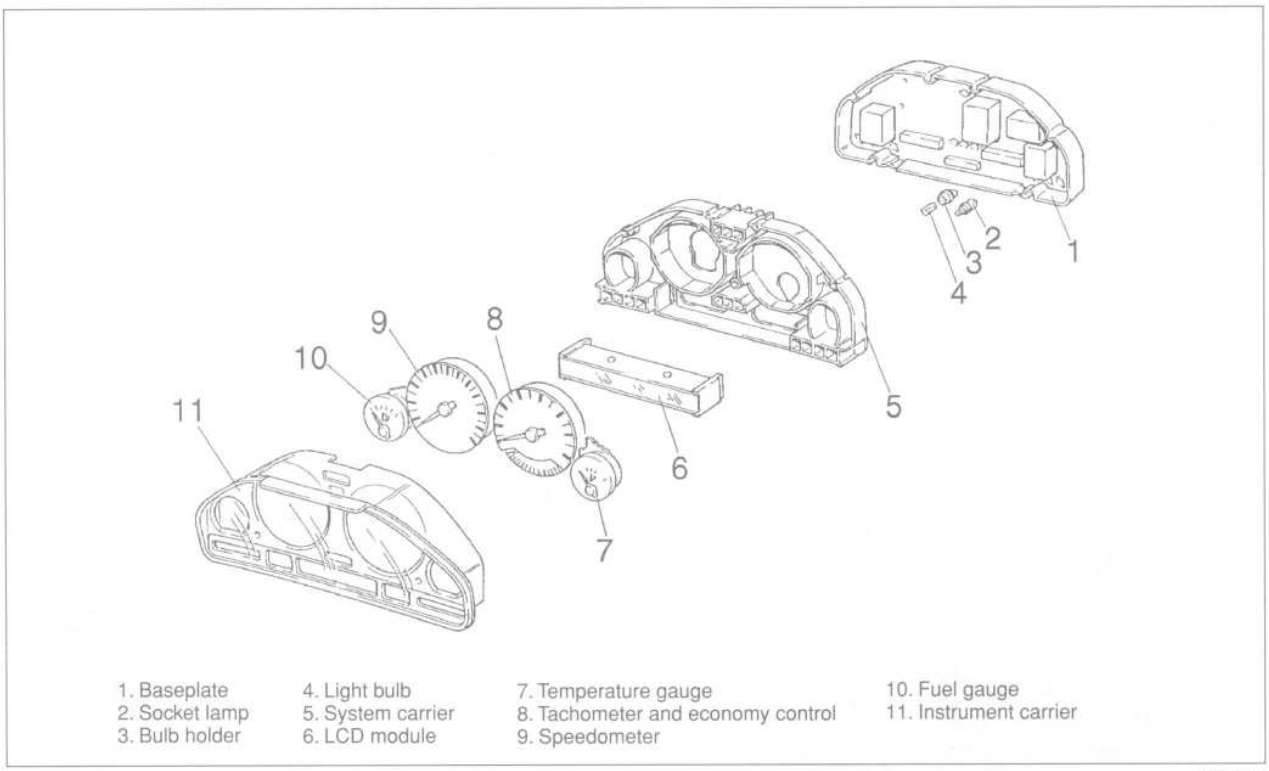

1. Baseplate
2. Socket lamp
3. Bulb holder
4. Light bulb
5. System carrier
6. LCD module
7. Temperature gauge
8. Tachometer and economy control
9. Speedometer
10. Fuel gauge
11. Instrument carrier

0011722

Fig. 3. Exploded view of instrument cluster

3. Release toggle locks and pivot cluster base plate up off of instrument carrier. See Fig. 4.

4. Unhook base plate from instrument carrier and disconnect wiring connector (if applicable).

5. Remove screws from perimeter of cluster. Carefully lift off cluster cover from instrument carrier.

> ***CAUTION —***
> *LCD module can fall out once cluster cover is separated from instrument carrier.*

6. Remove individual instruments by carefully pulling them straight out of instrument carrier.

7. Instrument cluster assembly is reverse of disassembly.

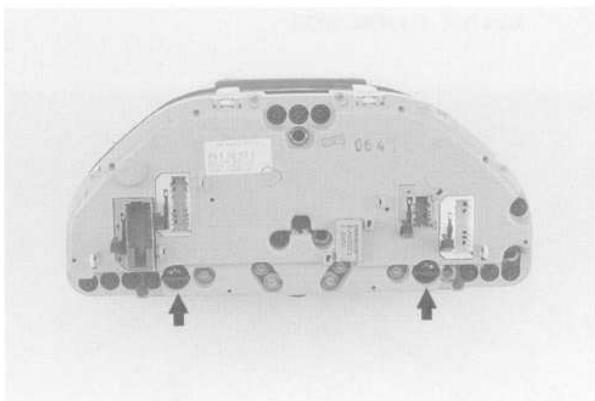

0011796

Fig. 4. Instrument cluster base plate toggle locks (**arrows**). Turn lock 90° to unlock/lock.

Instrument cluster bulbs, replacing

Fig.5 shows the bulbs used in the Standard cluster (cars built up to Feb. 1989). Fig. 6 shows the bulb arrangement in the redesigned cluster (cars built from Feb. 1989).

1. Remove instrument cluster as described earlier.

2. Remove faulty bulb by turning bulb base 90° in its mount. To access bulbs behind base plate, release toggle locks and pivot cluster base plate up off of instrument carrier.

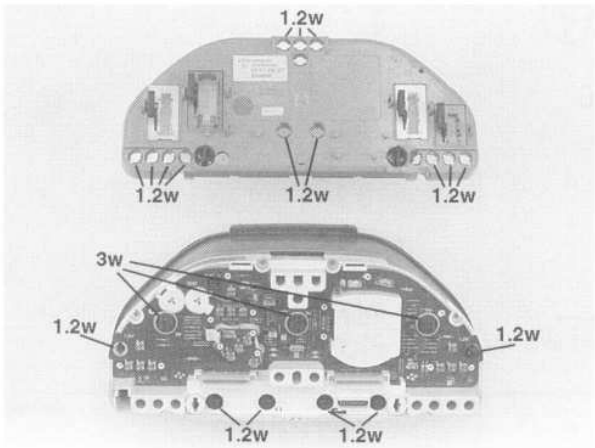

Fig. 5. Instrument cluster bulb arrangement for Standard cluster (cars built up to Feb. 1989).

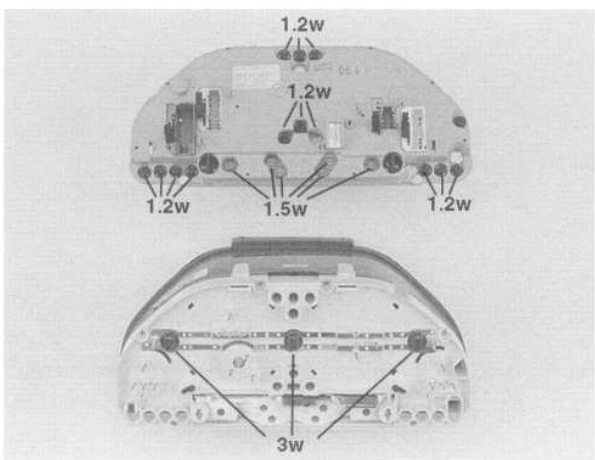

Fig. 6. Instrument cluster bulb arrangement for redesigned cluster (cars built from Feb. 1989).

Odometer coding plug, replacing (cars built up to Feb. 1989)

On cars with the Standard instrument cluster (cars built Feb. 1989 and earlier), the vehicle mileage is retained in the coding plug. The coding plug is located in the brown harness connector at the rear of the cluster.

1. Remove instrument cluster.

2. Record mileage of vehicle.

3. Remove rear portion of brown connector (X17). See See Fig. 7.

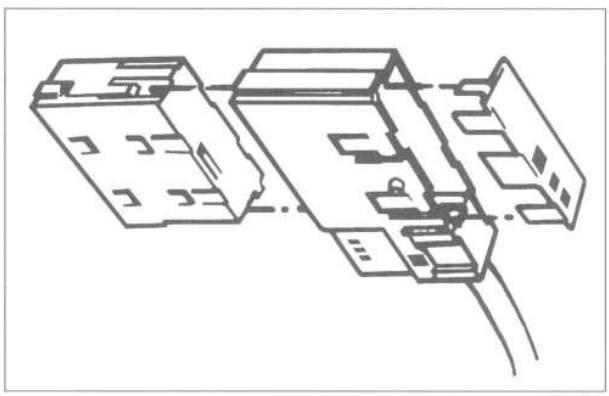

Fig. 7. Coding plug on earlier model (cars built up to Feb. 1989) instrument cluster.

4. Insert special removing tool (supplied with replacement coding plug) into backside of plug, releasing the coding plug retaining tangs.

5. Remove coding plug from front side of plug.

6. Remove silver identification code label from new coding plug.

7. Insert new coding plug from side of the connector.

8. Install the new protective cap onto the back of the harness connector.

NOTE —

The Federal Odometer Disclosure Requirement 92-513 states that when ever an odometer is replaced, the mileage prior to its replacement along with the date that the replacement occured must be recorded onto the left door frame of the vehicle. It is the responsibility of the person making this replacement to record this information onto the vehicle. A "non-removeable" label is available from BMW to record this information (part no. 89 89 1 000 500).

Odometer coding plug, replacing (cars built Feb. 1989 and later)

On cars with the redesigned cluster (Feb. 1989 and later), the coding plug has been integrated into the cluster itself.

1. Record mileage of vehicle.
2. Remove instrument cluster. See procedure described earlier.

> ***CAUTION —***
> *Before removing the coding plug from the instrument cluster, wait at least for one minute after removing the cluster. This will allow residual voltage to be discharged. If this is not done, there is a possibility of data loss or damage to the cluster and or coding plug.*

3. Use a knife to cut out coding plug locking frame on rear of instrument cluster. See Fig. 8.

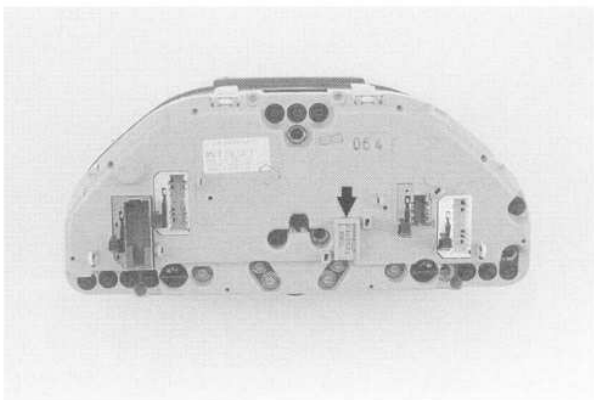

0011796A

Fig. 8. Coding plug locking frame on rear of instrument cluster (**arrow**).

4. Remove coding plug by pulling it straight out of printed circuit board.
5. Install new coding plug and install locking frame.

> ***NOTE —***
> *The instrument coding plug supplies data to the on board computer. In order to ensure that the correct data is transferred to the on board computer, the on board computer must be disconnected from its multi-pin connector for a least one minute after the replacement of the instrument coding plug.*

Vehicle speed sender, replacing

The vehicle speed sender supplies an electronic pulsed speed signal to the speedometer. The sender is mounted beneath the rear of the car, on the differential cover plate.

> ***NOTE —***
> *If the speedometer is malfunctioning, check the vehicle speed sensor harness connector on the rear differential. Water damage, frayed wires and corrosion of the connector contacts are often the cause of speedometer malfunction.*

1. Locate vehicle speed sender electrical connector at back of differential. Depress retaining levers on connector and disconnect connector. See Fig. 9.

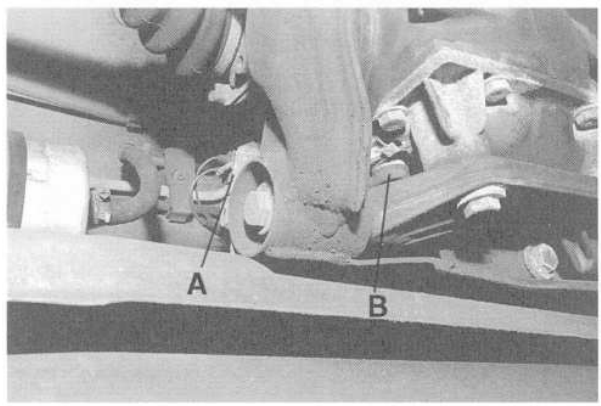

0011800

Fig. 9. Vehicle speed sender harness connector (**A**) and sender (**B**).

2. Remove vehicle speed sender retaining screws and remove sender from differential cover.
3. On installation, replace O-ring and coat with oil (90W oil). Install O-ring up to first land on sender. Install sender into differential and tighten mounting bolts evenly in stages until the sender is firmly seated. See Fig. 10.

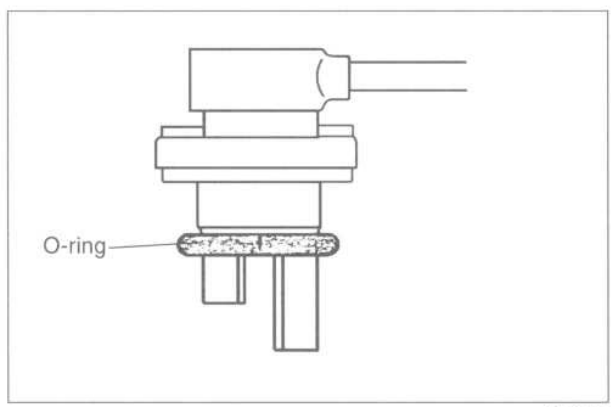

0011755

Fig. 10. O-ring correctly installed on vehicle speed sender.

Tightening Torque

- Vehicle speed sender to differential cover . . . . . .6.6-8.4 Nm (53-74 in-lb)

On Board Computer, removing and installing

The On Board Computer (OBC) is illuminated by two bulbs. It must be removed to replace the bulbs.

1. Remove radio. See **650 Radio and Alarm**.

2. Slide lever forward to release On Board Computer from instrument panel. See Fig. 11.

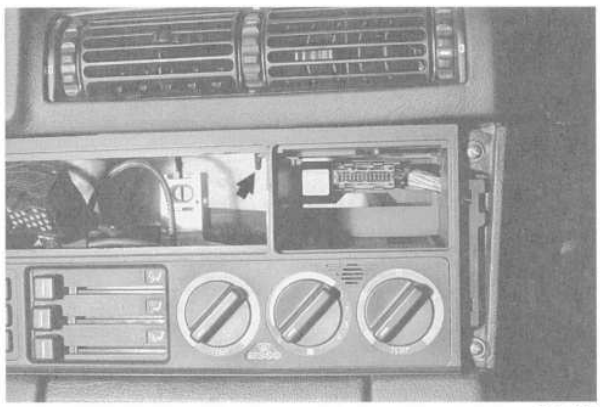

0011802

Fig. 11. On Board Computer release lever (**arrow**).

3. Installation is the reverse of removal.

630 Exterior Lighting

GENERAL 630-1

FRONT LIGHTING 630-1
- Headlight bulb, replacing 630-1
- Headlight assembly, removing and installing 630-2
- Headlight lens unit, removing and installing . . 630-2
- Front fog light assembly, removing and installing 630-3
- Front turn signal assembly, removing and installing 630-3
- Front side marker assembly and bulb, replacing 630-4

REAR LIGHTING 630-4
- Tail light bulb, replacing 630-4
- Tail light assembly, removing and installing . . 630-4
- Rear side marker assembly and bulb, replacing 630-5
- Center brake light bulb, replacing (sedan models) 630-5
- License plate light, removing and installing . . 630-5

GENERAL

The headlight and fog light assemblies use halogen bulbs. To ensure the longevity of halogen bulbs, the bulb glass should not be handled. Dirt and skin oils may cause a bulb to fail prematurely. If necessary clean bulb using a clean cloth dampened with rubbing alcohol.

NOTE —
Use only original equipment replacement bulbs. Non-original equipment bulbs may cause false failure readings on the check control display in the instrument cluster.

WARNING —
When working on electrical systems, disconnect the negative (-) battery cable.

FRONT LIGHTING

Headlight bulb, replacing

1. Open engine hood.
2. Remove black plastic protective cover from back of headlight assembly. See Fig. 1.

NOTE —
If replacing driver's side headlight bulb remove the alternator cooling duct (as necessary) before removing the protective cover behind the headlight.

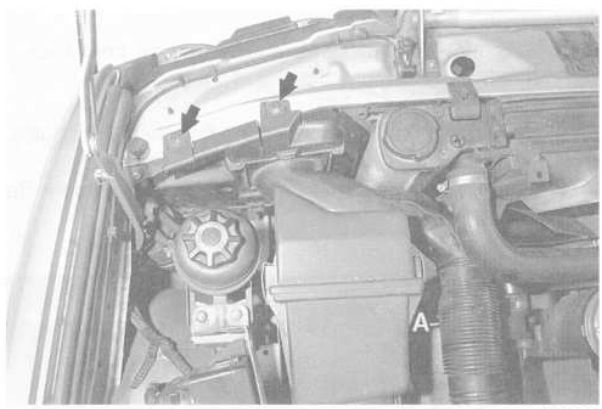

0011827

Fig. 1. Headlight protective cover mounting screws (**arrows**). Alternator cooling duct shown at **A**.

3. Grasp rear of bulb socket (harness connector) and turn counterclockwise 90°. Pull bulb out of headlight assembly. See Fig. 2.
4. Disconnect harness connector from bulb.

CAUTION —
Do not touch halogen bulbs. If accidentally handled, clean bulb glass using a clean cloth dampened with rubbing alcohol.

5. Installation is the reverse of removal. Align tabs on bulb base to cutouts on rear of lens assembly. Secure bulb by rotating bulb base clockwise 90°.

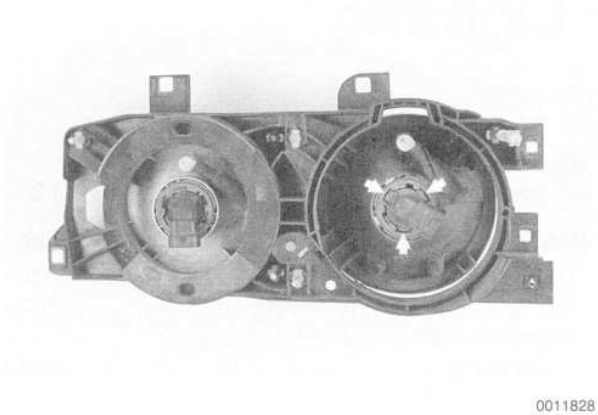

0011828

Fig. 2. To release bulb from headlight assembly, rotate bulb counterclockwise to disengage retaining tabs (**arrows**) and remove.

Headlight assembly, removing and installing

1. Remove side radiator grill. See **510 Exterior Trim, Bumpers**.
2. Remove black plastic protective cover from back of headlight assembly. See Fig. 1.
3. Disconnect harness connectors from headlight bulbs.
4. Remove screws from front of headlight assembly. See Fig. 3.

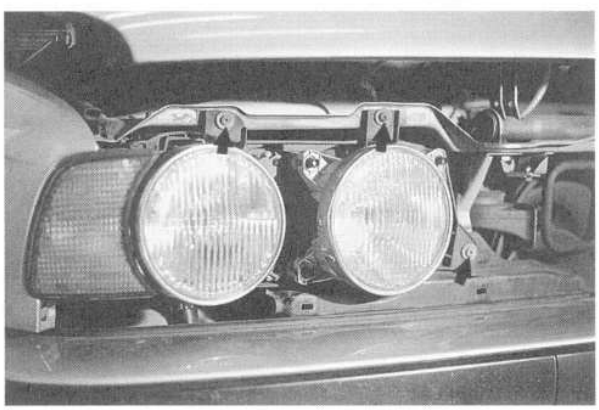

0011829

Fig. 3. Headlight assembly front mounting screws (**arrows**).

5. Remove screws from rear of headlight assembly. See Fig. 4.
6. Remove headlight assembly from front.
7. Installation is reverse of removal.

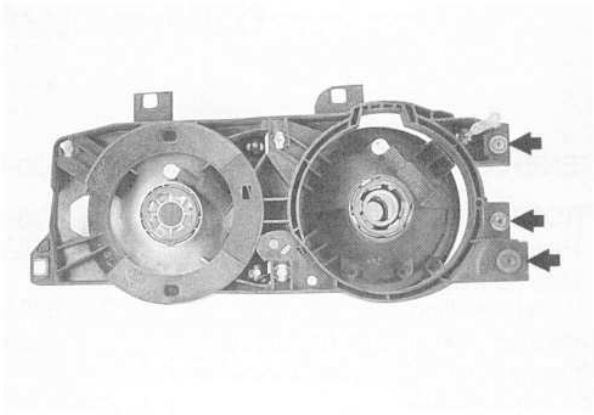

0011830

Fig. 4. Headlight assembly rear mounting screws (**arrows**).

Headlight lens unit, removing and installing

1. Remove side radiator grill. See **510 Exterior Trim, Bumpers**.
2. Using a hot air blower, heat plastic sleeves on front of lens unit and pry lens unit from headlight carrier. See Fig. 5.

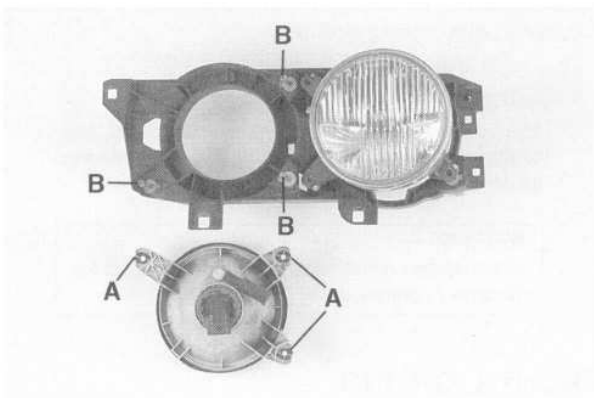

0011831

Fig. 5. Headlight lens unit retaining sleeves (**A**) and ball studs (**B**).

3. Installation is reverse of removal. Remove plastic sleeves from lens unit and install on ball studs before pressing lens unit into carrier.

Front fog light assembly, removing and installing

The following procedure includes fog light lens replacement and fog light bulb replacement.

NOTE —
There are a few different variations of fog lights. Procedures may vary slightly.

1. Remove towing eye cover from lower bumper valence.
2. Remove screw and remove fog light assembly from the lower bumper valence. See Fig. 6.



0011832

Fig. 6. Fog light retaining screw (**A**). Remove towing eye cover by depressing locking tab (**B**) and lifting out cover.

3. Remove bulb from rear of fog light assembly. Disconnect electrical harness from fog light bulb.

> ***CAUTION —***
> *Do not touch halogen bulbs with your bare hands. Dirt and skin oils may cause premature bulb failure. If necessary clean bulb using a clean cloth dampened with rubbing alcohol.*

4. Installation is the reverse of removal. Check electrical connector for corrosion. Spray with contact cleaner, if necessary.

Front turn signal assembly, removing and installing

The following procedure also includes turn signal bulb replacement.

1. Remove black plastic protective cover from back of headlight assembly. See Fig. 1.
2. Remove bulb socket with bulb from turn signal assembly. See Fig. 7.

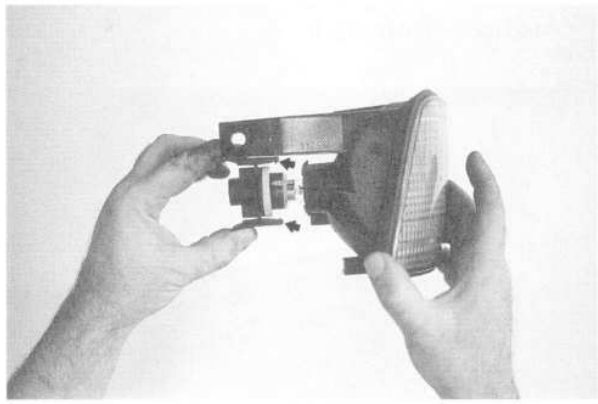

0011833

Fig. 7. Front turn signal bulb shown removed. Depress locking tabs (**arrows**). When installing bulb socket, align tab on socket with slot in housing.

3. Remove turn signal retaining screws. See Fig. 8.

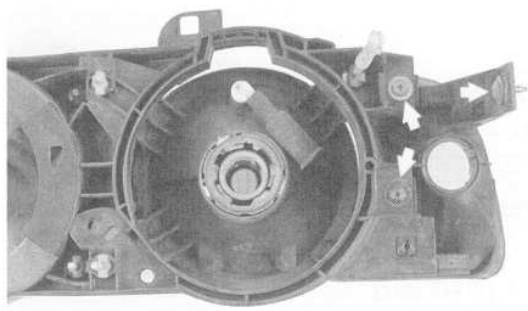

0011834

Fig. 8. Front turn signal retaining screws (**arrows**).

4. Push turn signal assembly out from behind.

NOTE —
To remove bulb from bulb socket, push bulb in gently and rotate counterclockwise and pull bulb from socket.

Front side marker assembly and bulb, replacing

1. Carefully pry end of side marker away from bumper and remove. See Fig. 9.

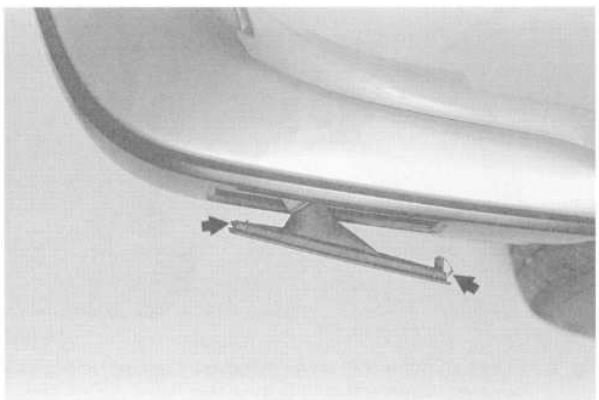

0011837

Fig. 9. Side marker lens shown removed from bumper. **Arrows** indicate lens retaining tabs.

2. To remove bulb with socket from side marker housing by turning socket 90° counterclockwise and pull out of lens.

Bulb Specification	
• Side marker bulb	5 watt

3. Installation is reverse of removal.

REAR LIGHTING

Tail light bulb, replacing

The procedure given below applies to the tail light bulbs in the lens assembly on the body. The procedure for replacing the bulbs in the lens assembly on the trunk lid is similar.

1. Open trunk lid and remove side liner retainer. Pull back liner to access rear of tail light.

2. Twist bulb housing 90° and remove bulb socket from rear of tail light lens assembly. See Fig. 10.

3. To remove bulb from bulb socket, push bulb in gently and rotate counterclockwise and pull bulb from socket.

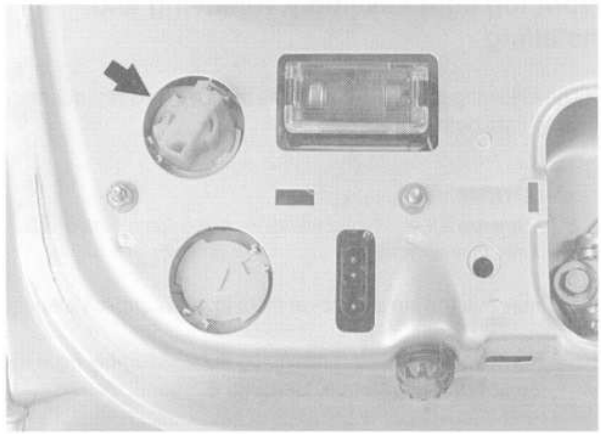

0011838

Fig. 10. To remove tail light bulb socket (**arrow**), twist 90° and pull out of lens assembly.

Tail light assembly, removing and installing

The procedure given below applies to the tail light lens mounted on the body. The procedure for removing the lens assembly mounted on the trunk lid is similar.

1. Open trunk lid and remove side liner retainer. Pull back liner to access rear of tail light.

2. Disconnect harness connector from rear of tail light lens assembly and remove nuts. See Fig. 11.

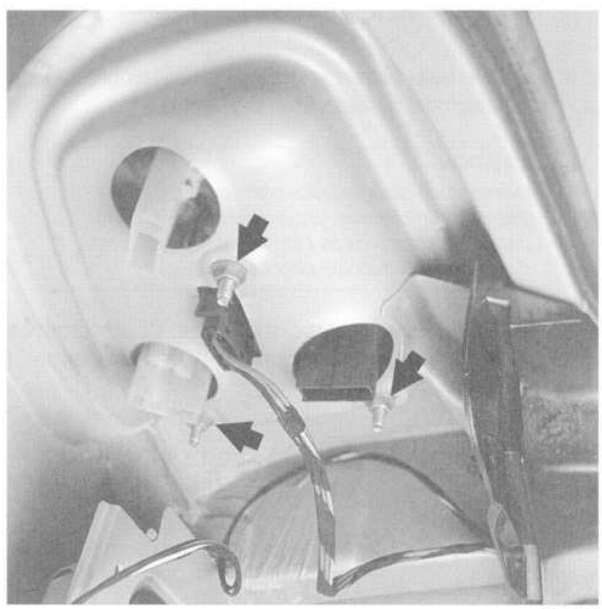

0011839

Fig. 11. Taillight lens assembly mounting nuts (**arrows**).

3. Installation is the reverse of removal.

Rear side marker assembly and bulb, replacing

1. Carefully pry end of side marker away from bumper and remove. See Fig. 9, given earlier.

2. To remove bulb with socket from side marker housing by turning socket 90° counterclockwise and pull out of lens.

Bulb Specification

- Side marker bulb . . . . . 5 watt

3. Installation is reverse of removal.

Center brake light bulb, replacing (sedan models)

1. Open trunk lid.

2. Locate bulb socket on the under side of the parcel shelf, below center brake light assembly.

3. Turn socket counterclockwise 90° and remove from center brake light assembly. Remove bulb from socket and replace.

4. Installation is the reverse of removal.

License plate light, removing and installing

1. Open trunk lid.

2. Remove screws retaining license plate light assembly.

3. Remove bulb and install new bulb.

NOTE —

Inspect bulb contact springs for damage and corrosion. Replace lens assembly if necessary.

4. Installation is the reverse of removal.

640 Heating and Air Conditioning

GENERAL 640-1

HEATER AND CONTROLS 640-1
Blower motor, removing and installing 640-1
Blower series resistance, replacing (IHKR II, IHKR III). 640-2
Blower final stage unit, replacing (IHKR I, IHKA) 640-2
Heater valve, replacing 640-3
Auxiliary coolant pump, replacing 640-4
Heater core, replacing. 640-4
Outside temperature sensor, replacing. 640-5
Heater core temperature sensor, replacing . . 640-5
Distribution control panel, removing and installing 640-6
Distribution control panel cables, replacing (IHKR cars only). 640-6
Air distribution motors, replacing. 640-6

AIR CONDITIONING 640-7
A/C system, warnings and cautions 640-7
A/C compressor, replacing (M20/M30 engines) 640-8
A/C compressor, replacing (M50 engine) 640-9
A/C compressor, replacing (M60 engine) . . . 640-10
A/C condenser, replacing. 640-10
A/C receiver/drier, replacing 640-11
A/C evaporator and expansion valve, removing and installing. 640-11
A/C evaporator temperature sensor, replacing 640-13
A/C microfilter, replacing 640-13
A/C control module, removing and installing . 640-13
Technical data, refrigerant specifications. . . . 640-14

TABLES

a. Heating Ventilation and Air Conditioning System Applications 640-1
b. Blower Motor Test Values 640-2
c. Outside Temperature Sensor Test Values 640-5
d. Heater Core Temperature Sensor Test Values. 640-5
e. Evaporative Temperature Sensor Test Values. 640-13
f. A/C System Refrigerant Capacities 640-14

GENERAL

The repair information given under this heading applies to the heating and air conditioning system. Many of the procedures require that the A/C refrigerant charge be evacuated.

Table a. Heating Ventilation and Air Conditioning System Applications

Model	HVAC System
1988-1990 (6-cylinder cars)	IHKRI
1991 (6-cylinder cars)	IHKR II
1992-1995 (6-cylinder cars)	IHKRIII
1994-1995 (8-cylinder cars)	IHKA

HEATER AND CONTROLS

Blower motor, removing and installing

1. Disconnect negative (–) battery terminal.
2. On cars with coolant expansion tank in rear of engine compartment, remove hose from overflow tank and disconnect electrical connector from level sensor in tank. Unbolt expansion tank and move to one side.
3. Unclip wire harness protective cover on rear bulkhead. Cut wire ties as necessary.
4. Remove bulkhead splash shield by removing six retaining screws. See Fig. 1.

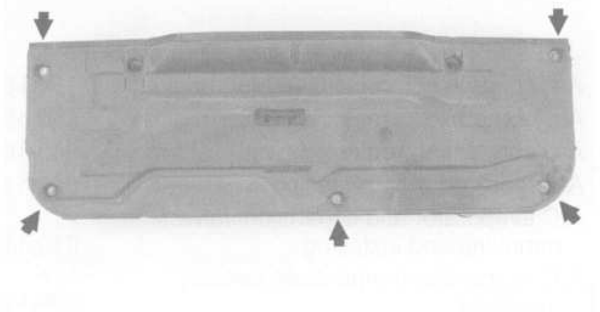

0011862

Fig. 1. Bulkhead splash shield retaining screws (**arrows**).

5. Unhook blower motor housing cover retaining strap and remove cover. See Fig. 2.

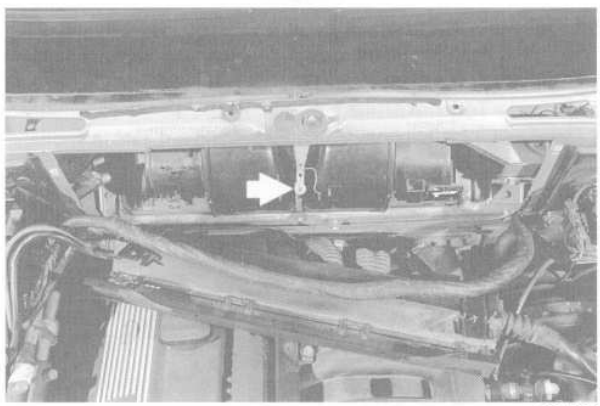

0011863

Fig. 2. Blower motor housing cover retaining strap (**arrow**).

6. Disconnect electrical connectors from blower motor.

7. Unclip blower motor retaining strap from blower motor. See Fig. 3.

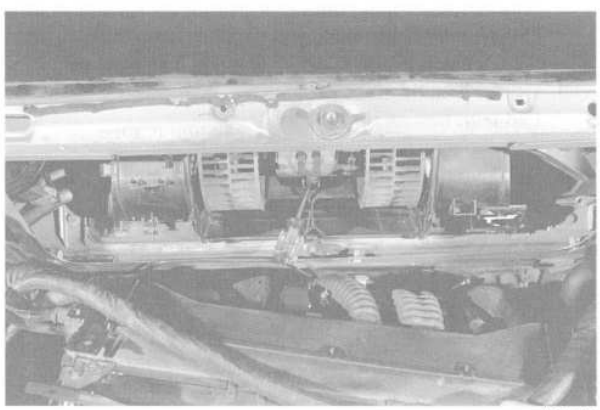

0011864

Fig. 3. Awl being used to disengage blower motor retaining strap. Pry up on strap to release.

8. Remove blower motor from cowl opening.

9. Installation is reverse of removal. Blower motor test specifications are listed in **Table b**.

Table b. Blower Motor Test Values

Testing voltage	13 volts DC
Operating voltage	9–15 volt DC
Current consumption (approx.)	12 amps
Maximum speed	3600–4000 rpm
Axial play (max. allowable)	1.0 mm (0.04 in.)

Blower series resistance, replacing (IHKR II, IHKR III)

1. Remove carpeted trim panel from left side of center console. Trim panel is retained by a single screw in side of panel.

2. Disconnect harness connector from series resistor. Remove series resistor from heater housing. See Fig. 4.

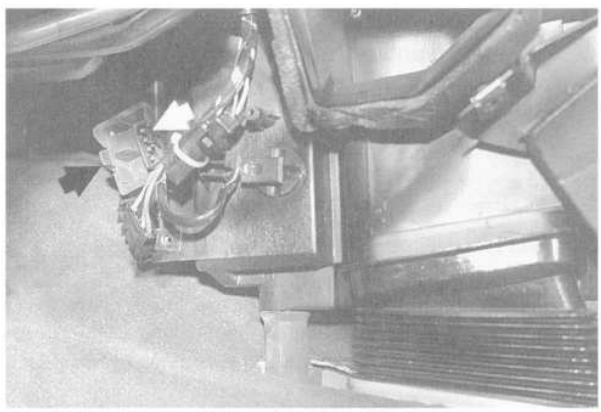

0011865

Fig. 4. Pry apart clips (**arrows**) and pull the resistance pack out.

Blower final stage unit, replacing (IHKR I, IHKA)

On cars with IHKR I and IHKA, the blower motor speed is regulated through the blower final stage unit.

1. Remove glove box. See **513 Interior Trim**.

2. Remove carpeted trim cover from right side of center console.

3. Remove trim cover at left side of glove box. See Fig. 5.

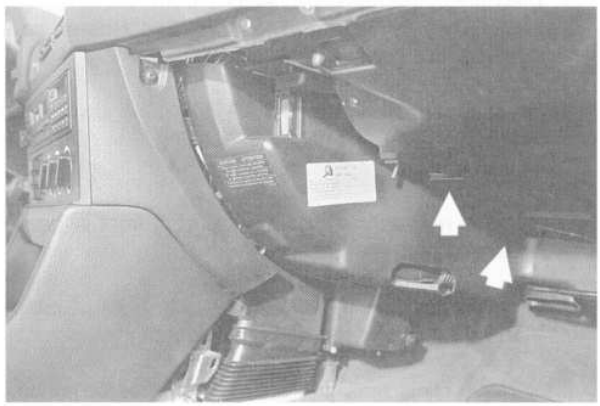

0011866

Fig. 5. Slide console trim cover forward and out after removing retaining clip and screw (**arrows**).

4. Remove ventilation air duct retaining screws and pull air duct down and out. See Fig. 6.

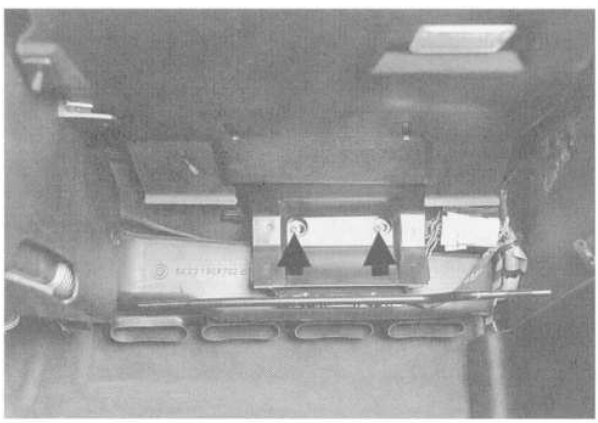

0011867

Fig. 6. Ventilation air duct retaining screws (**arrows**).

5. Disconnect all plugs on IHKR/IHKA control unit and from blower motor final stage. Move the wire harness out of the way.

6. Remove final stage mounting screws and remove final stage from heater unit. See Fig. 7.

7. Installation is reverse of removal.



0011868

Fig. 7. Final stage mounting screws (**arrows**) (IHKR I and IHKA only).

Heater valve, replacing

The heater valve is located in the rear of the engine compartment on the driver's side.

1. Drain engine coolant. See **170 Radiator and Cooling System**.

2. Disconnect two coolant supply heater hoses at rear bulkhead in engine compartment. See Fig. 8.

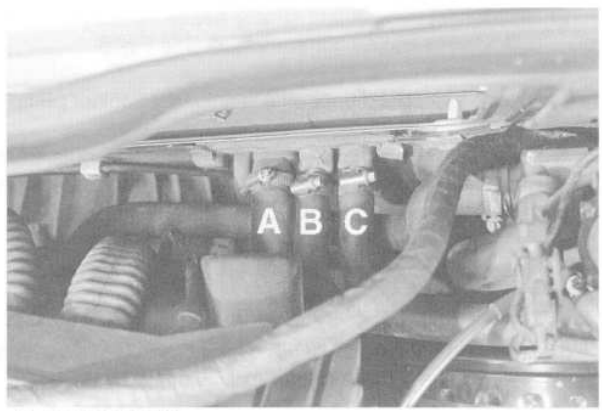

A. Coolant return
B. Coolant supply (passenger)
C. Coolant supply (driver)

0011869

Fig. 8. Heater hoses to be disconnected (**A, B, C**).

3. Disconnect hose from auxiliary coolant pump. See **Auxiliary coolant pump, replacing**.

4. Disconnect harness connector and remove mounting nuts from heater valve. Lift out heater valve together with auxiliary coolant pump. See Fig. 9.

5. Separate auxiliary coolant pump from heater valve.

6. Installation is reverse of removal. Fill and bleed cooling system. See **170 Radiator and Cooling System**.

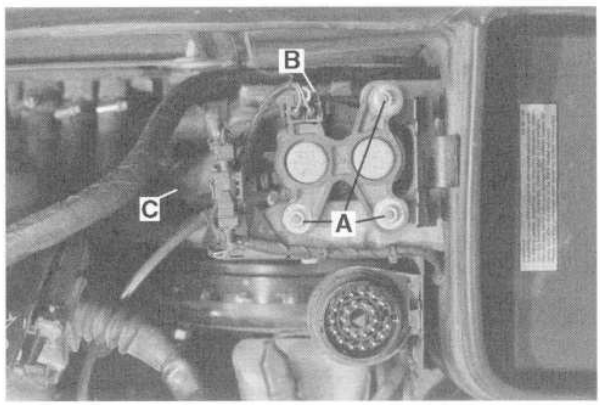

0011870

Fig. 9. Heater valve mounting nuts (**A**), harness connector (**B**), and coolant hose (**C**).

Auxiliary coolant pump, replacing

The auxiliary coolant pump is electrically operated and provides additional coolant circulation to the heater core. The pump is located in the rear of the engine compartment directly below the heater valve.

1. Drain engine coolant. See **170 Radiator and Cooling System**.
2. Disconnect two coolant supply heater hoses from rear bulkhead in engine compartment. See Fig. 8.
3. Disconnect coolant hose from auxiliary coolant pump.
4. Remove harness connector and mounting nuts from heater valve. See Fig. 9. Remove heater valve from mount together with auxiliary coolant pump.
5. Remove clamp from auxiliary coolant pump and remove pump from heater valve.
6. Installation is reverse of removal. Fill and bleed cooling system. See **170 Radiator and Cooling System**.

Heater core, replacing

1. Drain engine coolant. See **170 Radiator and Cooling System**.
2. Disconnect three heater hoses from rear bulkhead in engine compartment. See Fig. 8.

   NOTE —
   Clear any remaining coolant from the heater core by blowing compressed air into the coolant return hose (hose closest to the passenger side).

3. Remove center console and glove box. See **513 Interior Trim**.
4. Disconnect harness connectors from left and right heater core temperature sensors. See **Heater core temperature sensor, replacing**.
5. On cars with IHKR I and IHKA, unclip air distribution motor from right side of heater housing. See **Air distribution motors, replacing**.
6. Remove rear air distribution tube from front of heater housing.
7. Cut wire ties holding wire harness to front of heater housing and move wiring harness out of way.
8. Remove clips, nuts and screws from heater housing cover. See Fig. 10.

   NOTE —
   If necessary, unbolt bowden cable(s) and separate from front heater housing cover.

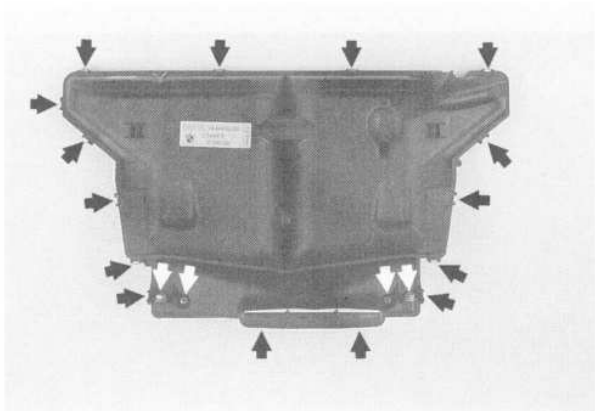

0011872

Fig. 10. Heater cover mounting clips, screws and nuts (**arrows**).

9. Remove heater pipes from heater core. See Fig. 11.

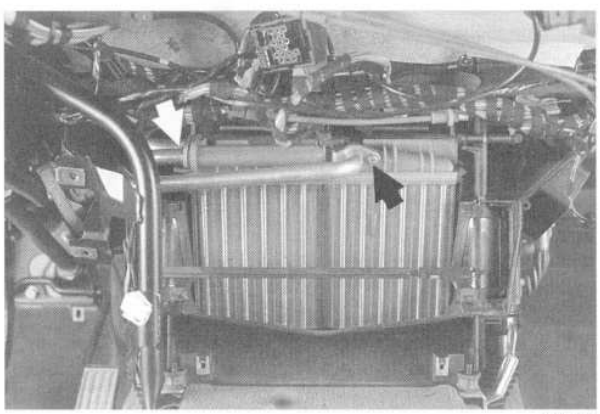

0011873

Fig. 11. Heater pipe mounting bolts on heater core (**arrows**).

10. Remove heater core by lifting out from right side.

11. Installation is reverse of removal. Fill and bleed cooling system. See **170 Radiator and Cooling System**. Use new O-rings when mounting the pipes to the heater core.

Outside temperature sensor, replacing

The outside temperature sensor is mounted on the blower motor housing behind the rear bulkhead splash shield.

1. Disconnect negative (–) battery cable.

2. On cars with coolant expansion tank in rear of engine compartment, remove hose from overflow tank and disconnect electrical plug from level sensor at tank. Unbolt expansion tank and move to one side.

3. Unclip wire harness protective cover on rear bulkhead. Cut wire ties as necessary.

4. Remove bulkhead splash shield by removing six retaining screws. See Fig. 1.

5. Slide outside temperature sensor out of blower housing. See Fig. 12.

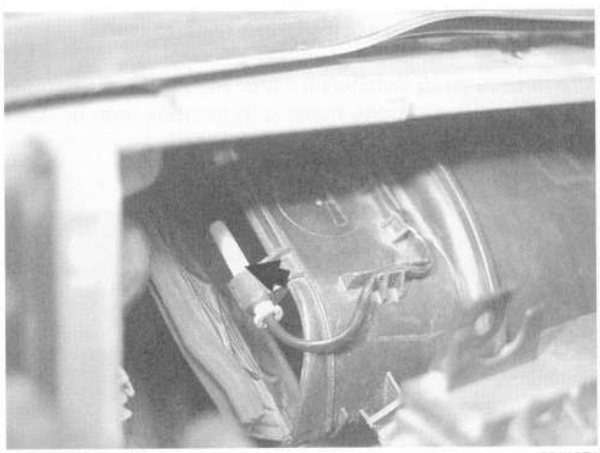

0011874

Fig. 12. Outside temperature sensor (**arrow**) in blower housing. Slide sensor out of housing to remove.

6. Replace sensor by cutting sensor wiring approximately 30 mm (1.2 in.) from sensor end. Remove approximately 40 mm (1.6 in.) of insulation from sensor harness.

7. Install heat shrink tubing on finished wiring splice. Connect wires from new sensor to harness wires and solder in place.

NOTE —

To minimize danger of a short circuit, reconnect and solder the sensor wiring so that wire splices are offset from each other.

8. Installation is reverse of removal. Outside temperature sensor test values are listed in **Table c**.

Table c. Outside Temperature Sensor Test Values

Test temperature	Resistance
0°C (32°F)	2.69—3.46 k ohms
10°C (50°F)	1.74—2.11 k ohms
20°C (68°F)	1.15—1.32 k ohms
25°C (77°F)	0.95—1.05 k ohms
30°C (86°F)	0.76—0.87 k ohms
40°C (104°F)	0.49—0.60 k ohms

Heater core temperature sensor, replacing

1. Remove center console. See **513 Interior Trim**.

2. Disconnect harness connector from sensor and carefully pry out sensor from heater core housing. See Fig. 13.



0011875

Fig. 13. Left and right heater core temperature sensors (**arrows**). Right side sensor shown removed.

3. Installation is reverse of removal. Heater core temperature sensor test values are listed in **Table d**.

Table d. Heater Core Temperature Sensor Test Values

Test temperature	Resistance
-20°C (4°F)	84.39—109.61 k ohms
-10°C (14°F)	48.58—62.09 k ohms
0°C (32°F)	28.89—36.40 k ohms
20°C (68°F)	11.13—13.83 k ohms
60°C (140°F)	2.19—2.78 k ohms
100°C (212°F)	0.58—0.77 k ohms

Distribution control panel, removing and installing

There are two types of heater and air conditioning control panels installed in E-34 cars. Six cylinder models are fitted with the IHKR slide lever control panel.

Eight cylinder models received an automatic climate control system designated IHKA. This systems control panel has three groups of three push buttons on the lower part of the panel and three rotary dials on the upper part of the panel.

1. Remove radio. See **650 Radio**.
2. Reach in through radio opening and push tab outwards (toward steering wheel) and remove panel just far enough to disconnect connectors and cables from back of unit.
   - Cars with IHKR:To remove bowden cables, press together retaining tab and lift out cable end from operating lever. See Fig. 14.

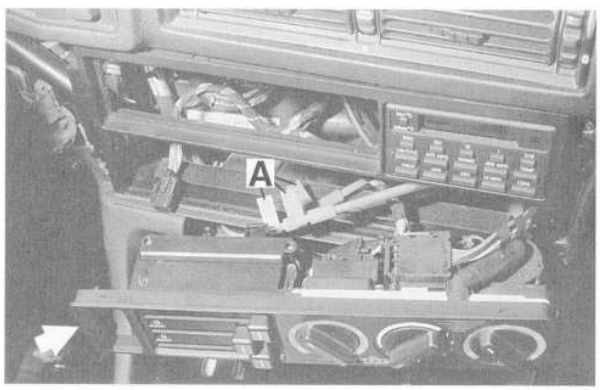

0011712

Fig. 14. Distribution control panel retaining tab (**arrow**). Bowden cable retaining clips at (**A**) on cars with IHKR.

3. Installation is reverse of removal.

Distribution control panel cables, replacing (IHKR cars only)

1. Remove glove box. See **513 Interior Trim**.
2. Remove carpeted trim cover at right side of center console.
3. Remove plastic trim cover at left of glove box. See Fig. 5.
4. Remove heating and air conditioning distribution panel. See **Distribution panel, removing and installing**.
5. Disconnect bowden cable(s) from air distribution levers. See Fig. 15.

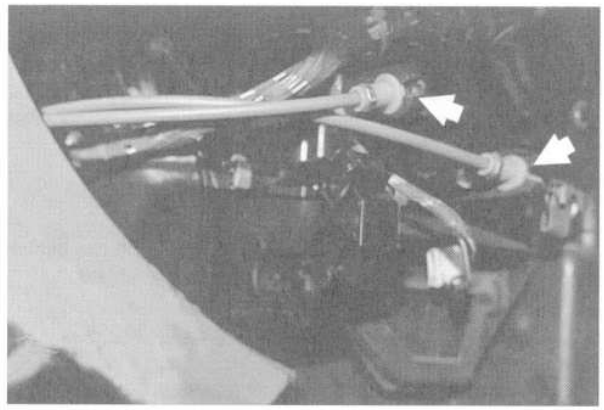

0011876

Fig. 15. Control cables for air distribution levers (**arrows**).

NOTE —
On installation, the cables are adjusted automatically by moving the control lever left to the left stop or right to the right stop.

Air distribution motors, replacing

The distribution of air is controlled by a series of flaps that are actuated by stepper motors. Depending on the air conditioning version installed, there are up to ten distribution motors located in various areas of the heater box.

To remove an air distribution motor, disconnect the harness connector and unclip the motor with gearbox from housing. See Fig. 16.

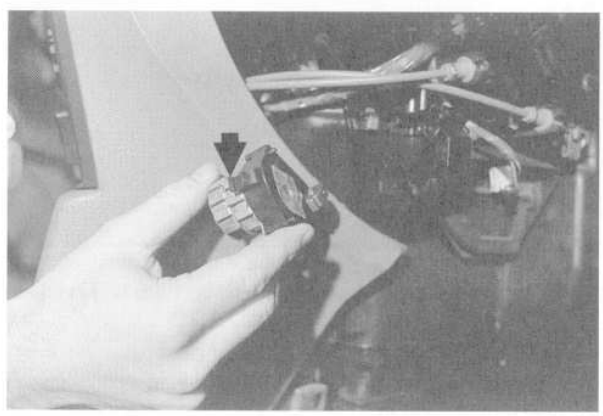

0011877

Fig. 16. Air distribution flap stepper motor mounting clip (**arrow**). Release clip and tilt motor out of housing.

AIR CONDITIONING

This section covers the air conditioning refrigerant components removal and installation. A/C refrigerant discharge, evacuation, and recharge is not covered here.

> ***CAUTION —***
> *It is recommended that all service to the A/C system refrigerant components be left to an authorized BMW dealer or other qualified A/C service facility. If any of the refrigerant components are disconnected or removed, special equipment, supplies, and new parts will be needed to remove moisture from the system and recharge the refrigerant before it is closed back up.*

The subassemblies and lines of the air conditioner are filled with either refrigerant R12 (1989–1992 cars) or R-134a (1993 and later cars). Fig. 17 shows the major components of the A/C system.

A/C system, warnings and cautions

> ***WARNING —***
> - *Work in a well ventilated area. Avoid breathing refrigerant vapors. Exposure may irritate eyes, nose, and throat. Switch on exhaust/ventilation systems when working on the refrigerant system.*
> - *Always be careful that refrigerant does not come in contact with your skin. Always wear hand and eye protection (gloves and goggles) when working around the A/C system. If refrigerant does come in contact with your skin or eyes:*
>   *-Do not rub skin or eyes*
>   *-Immediately flush skin or eyes with cool water for 15 minutes*
>   *-Rush to a doctor or hospital–Do not attempt to treat yourself*
> - *Refrigerant gases are heavier than air, displace oxygen and may cause suffocation in areas of poor circulation, for example under a car. Switch on exhaust/ventilation systems when working on the refrigerant system.*

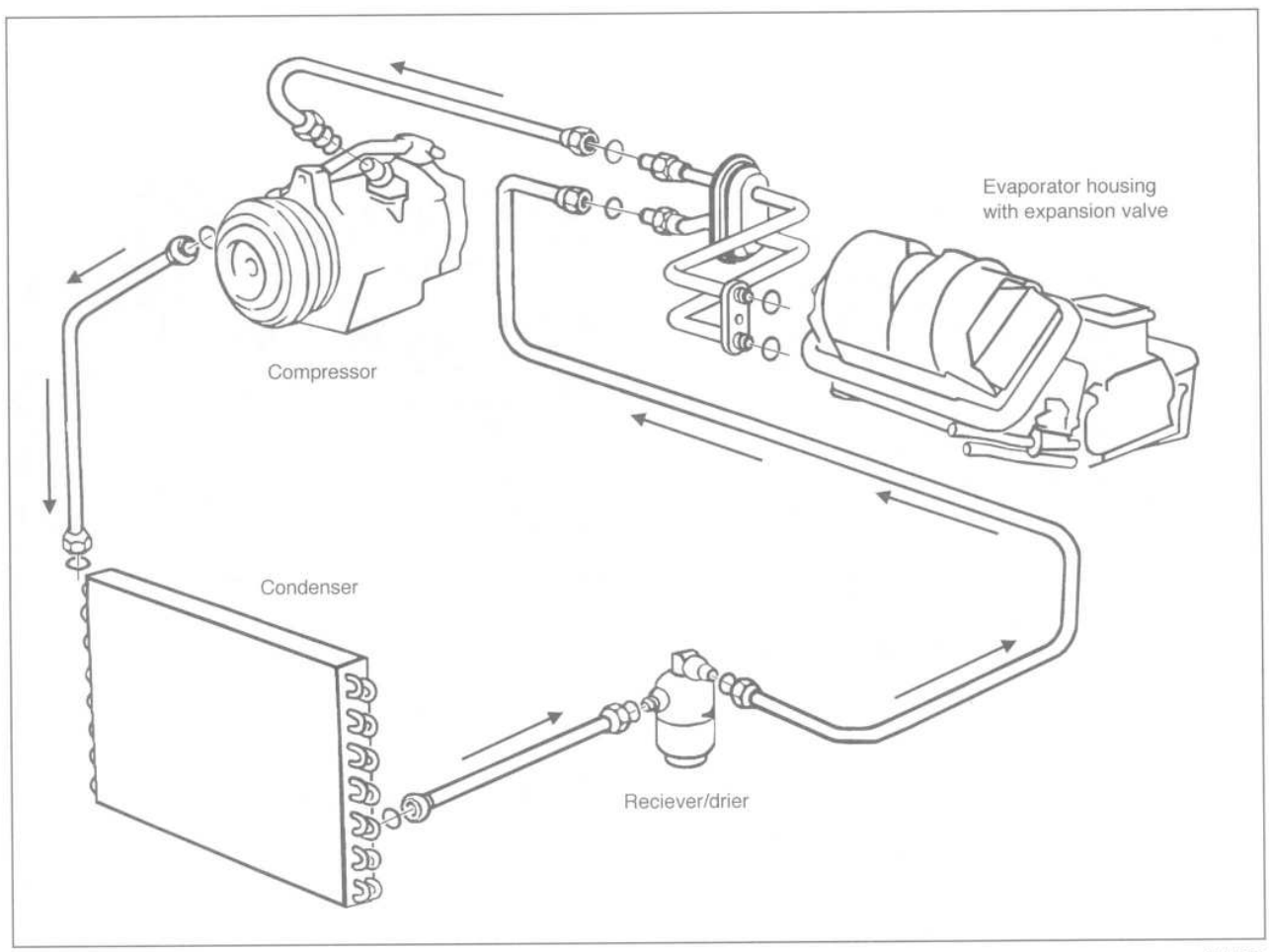

Fig. 17. A/C components. Arrows indicate direction of refrigerant flow.

WARNING —

- *As of January 1, 1992 any person who services a motor vehicle air conditioner must, by law, be properly trained and certified, and use approved refrigerant recycling equipment. Technicians must complete an EPA-approved recycling course to be certified*
- *The A/C system is filled with refrigerant gas which is under pressure. Pressurized refrigerant in the presence of oxygen may form a combustible mixture. Never introduce compressed air into any container (full or empty), capped off A/C component, or piece of service equipment.*
- *State and local governments may have additional requirements regarding air conditioning servicing. Always comply with state and local laws.*
- *Do not expose any component of the A/C system to high temperatures (Above 80° C/ 176° F) or open flames. Excessive heat will cause a pressure increase which could burst the system.*
- *Keep refrigerant away from open flames. Poisonous gas will be produced if it burns. Do not smoke near refrigerant gases for the same reason.*
- *Electric welding near refrigerant hoses causes R-134a to decompose. Discharge system before welding.*

CAUTION —

- *Do not top-off a partially charged refrigerant system. Discharge system, evacuate and then recharge system.*
- *R-134a and R-12 refrigerants and refrigerant oils and system components, including hoses and sealing O-rings, are NOT compatible. Component damage and/or system contamination will result.*
- *Service equipment for the R-134a and R-12 systems are not compatible. Use proper service equipment. Damage to both vehicle and service equipment will result from R-12 contamination of R-134a.*
- *The mixture of refrigerant oil (PAG oil) and refrigerant R-134a attacks some metals and alloys (for example, copper) and breaks down certain hose materials. Use only hoses and lines that are identified with a green mark (stripe) or the lettering "R-134a".*
- *Immediately plug open connections on A/C components to prevent dirt and moisture contamination.*
- *R-134a and R-12 systems use different size service fittings. Never use adapters to convert an R-12 fitting to R-134a size.*
- *Do not steam clean condensers or evaporators. Use only cold water or compressed air.*

A/C compressor, replacing (M20/M30 engines)

1. Following the manufacturer's instructions, connect an approved refrigerant recovery/recycling/recharging unit to the A/C system and discharge system.

WARNING —

Do not discharge/charge the A/C system without proper equipment and training, damage to the vehicle and personal injury may result. Read warnings and cautions given under **A/C system, warnings and cautions**.

2. Disconnect negative (–) battery terminal.
3. Remove air cleaner assembly from right front corner of engine compartment.
4. Remove drive belt from A/C compressor. See **020 Maintenance Program**.
5. Cut tie-wrap retaining A/C compressor electrical harness to refrigerant hose. Disconnect harness connector from compressor
6. Unscrew the A/C pressure hose and suction hose from compressor. See Fig. 18.

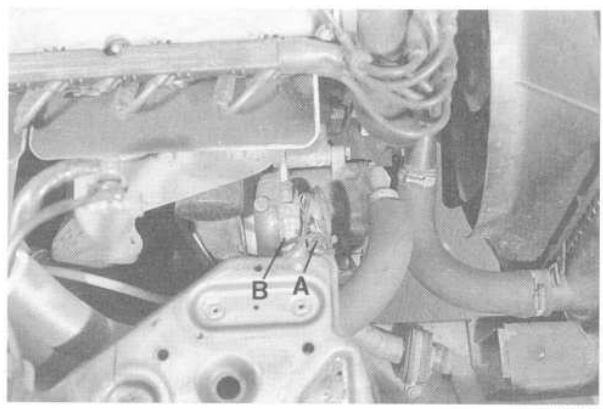

0011878

Fig. 18. A/C compressor pressure hose (**A**) and suction hose (**B**) on M20 engine.

7. From under car, remove splash shield.
8. Loosen (but do not remove) compressor mounting nuts.
9. Swing compressor towards engine and remove drive belt.
10. Remove compressor mounting nut and remove compressor.

11. Installation is reverse of removal. Replace O-rings at pressure fittings.

> ***CAUTION —***
> *Do not re-use O-rings when reconnecting refrigerant lines. Always replace O-rings.*

12. Before recharging, evacuate system for at least 30 min. Recharge system following equipment manufacturer's instructions.

Tightening Torques (M20/M30 engines)

- A/C compressor to engine block . . . . 22 Nm. (17 ft-lb)
- A/C line flange to A/C compressor (self-locking nut) . . . . . 20 Nm (15 ft-lb)
- A/C line flange to A/C compressor
  - 5/8 in. line . . . . . 20 Nm (15 ft-lb)
  - 3/4 in. line . . . . . 39 Nm (29 ft-lb)
  - 7/8 in. line . . . . . 42 Nm (31 ft-lb)
  - 11/16 in. line . . . . . 48 Nm (35 ft-lb)

A/C compressor, replacing (M50 engine)

1. Following the manufacturer's instructions, connect an approved refrigerant recovery/recycling/recharging unit to the A/C system and discharge system.

> ***WARNING —***
> - *Do not discharge/charge the A/C system without proper equipment and training, damage to the vehicle and personal injury may result. Read warnings and cautions given under* **A/C system, warnings and cautions**.

2. Disconnect negative (–) battery terminal.
3. Remove engine splash guard from under engine.
4. Remove drive belt from A/C compressor. See **020 Maintenance Program**.
5. Disconnect suction and pressure hose and set aside. Discard O-rings. See Fig. 19.
6. Disconnect electrical connector, and remove A/C compressor mounting bolts. See Fig. 20.
7. Remove compressor.
8. Installation is reverse of removal. Replace O-rings at pressure fittings.

> ***CAUTION —***
> *Do not re-use O-rings when reconnecting refrigerant lines. Always replace O-rings.*

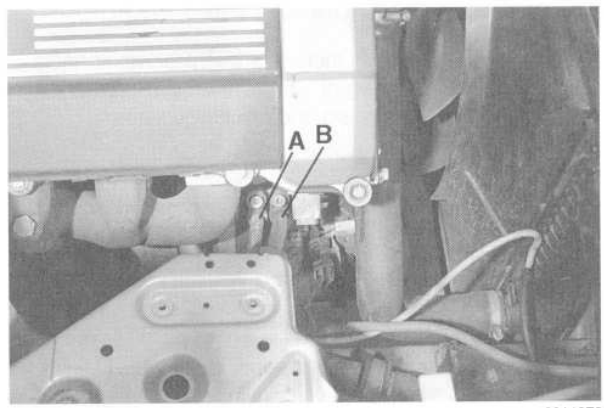

Fig. 19. A/C compressor pressure hose (**A**) and suction hose (**B**) on M50 engine.



Fig. 20. A/C compressor mounting bolts (**arrows**).

9. Before recharging, evacuate system for at least 30 min. Recharge system following the equipment manufacturer's instructions. For capacities, see **Technical data, capacities**.

Tightening Torques (M50 engine)

- A/C compressor to engine block . . . . 22 Nm (17 ft-lb)
- A/C line flange to A/C compressor (self-locking nut) . . . . . 20 Nm (15 ft-lb)

A/C compressor, replacing (M60 engine)

1. Following the manufacturer's instructions, connect an approved refrigerant recovery/recycling/recharging unit to the A/C system and discharge system.

> ***WARNING —***
> *Do not discharge/charge the A/C system without proper equipment and training, damage to the vehicle and personal injury may result. Read warnings and cautions given under* **A/C system, warnings and cautions**.

2. Disconnect negative (–) battery terminal.
3. Remove splash guard underneath engine.
4. Remove drive belt as described in **020 Maintenance Program**.
5. Disconnect suction and pressure hoses from A/C compressor.
6. Remove compressor mounting bolts and remove compressor. See Fig. 21.

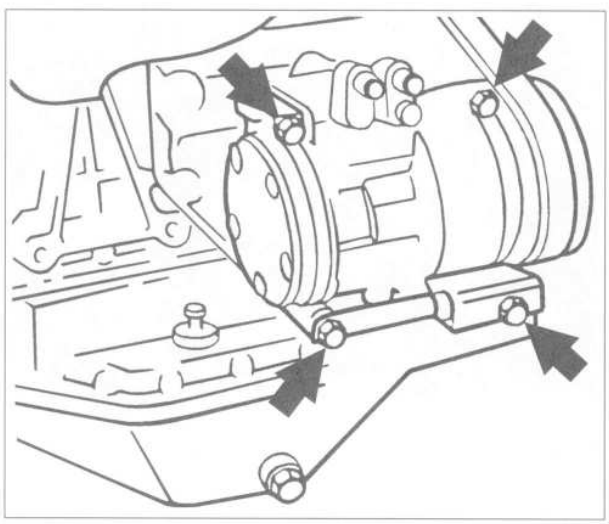

0011923

Fig. 21. A/C compressor mounting bolts on M60 engine (**arrows**).

7. Installation is the reverse of removal. Replace O-rings at pressure fittings.

> ***CAUTION —***
> *Do not re-use O-rings when reconnecting refrigerant lines. Always replace O-rings.*

8. Before recharging, evacuate the system for at least 30 min. Recharge system following the equipment manufacturer's instructions.

Tightening Torques (M60 engine)

- A/C compressor to engine block . . . . 22 Nm. (17 ft-lb)
- A/C line flange to A/C compressor (self-locking nut) . . . . . 20 Nm (15 ft-lb)

A/C condenser, replacing

1. Following the manufacturer's instructions, connect an approved refrigerant recovery/recycling/recharging unit to the A/C system and discharge system.

> ***WARNING —***
> *Do not discharge/charge the A/C system without proper equipment and training, damage to the vehicle and personal injury may result. Read warnings and cautions given under* **A/C system, warnings and cautions**.

2. Disconnect negative (–) battery terminal.
3. Remove front bumper and center radiator grill. See **510 Exterior Trim, Bumpers**.
4. Loosen A/C lines from lower left corner of condenser. Disconnect electrical connector.
5. Remove condenser mounting bolts from front radiator support. See Fig. 22.

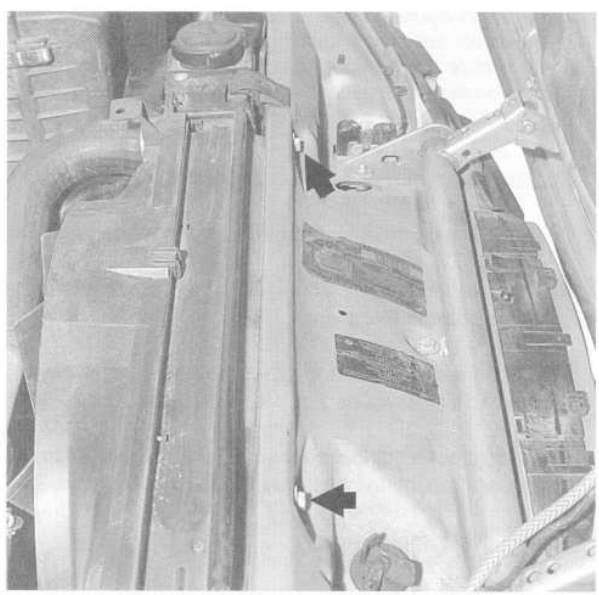

0011882

Fig. 22. A/C condenser mounting bolts on radiator support (**arrows**).

6. Lift up condenser to disengage from lower mounts and remove from below.

7. Installation is the reverse of removal. Replace O-rings at pressure fittings.

> ***CAUTION —***
> *Do not re-use O-rings when reconnecting refrigerant lines. Always replace O-rings.*

8. Before recharging, evacuate the system for at least 30 min. Recharge system following the equipment manufacturer's instructions. For capacities, see **Technical data, capacities**.

Tightening Torques (A/C condenser)

- A/C lines to receiver/drier
  - 5/8 in. line . . . . . 20 Nm (15 ft-lb)
  - 3/4 in. line . . . . . 39 Nm (29 ft-lb)
  - 7/8 in. line . . . . . 42 Nm (31 ft-lb)
- A/C line fitting to receiver/drier (self-locking nut) . . . . . 20 Nm (15 ft-lb)

A/C receiver/drier, replacing

The A/C receiver/drier is mounted in the front right corner of the engine compartment behind the headlight assembly.

> ***NOTE —***
> *There have been two types of receiver/driers installed on E34 cars. Up to 1/89, three separate switches were used to monitor the receiver/drier. On 2/1989 and later cars, one switch with three functions was used.*

1. Following the manufacturer's instructions, connect an approved refrigerant recovery/recycling/recharging unit to the A/C system and discharge system.

> ***WARNING —***
> *Do not discharge/charge the A/C system without proper equipment and training, damage to the vehicle and personal injury may result. Read warnings and cautions given under* **A/C system, warnings and cautions**.

2. Disconnect negative (–) battery terminal.
3. Remove protective cover from rear of right headlight assembly.
4. Disconnect harness connectors from windshield washer container and remove container from mount.
5. Disconnect switch electrical harness connector(s) and remove mounting bolts from receiver/drier. See Fig. 23.
6. Remove refrigerant pressure lines from receiver/drier. See Fig. 23.
7. Remove receiver/drier complete with safety switch(es).

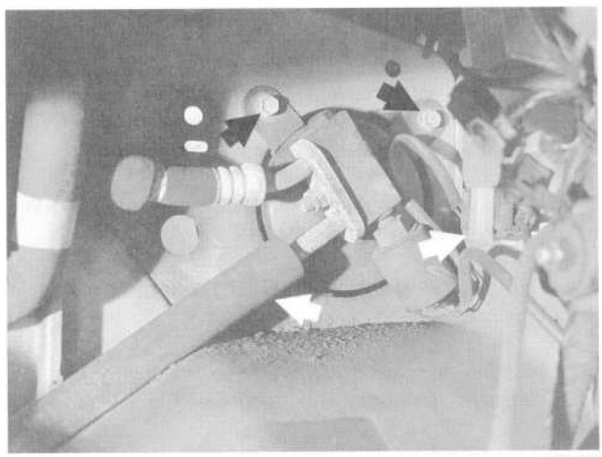

0011883

Fig. 23. A/C receiver/drier harness connector and mounting bolts (**arrows**). R12 A/C receiver/drier shown.

8. Installation is reverse of removal. Replace O-rings at pressure fittings.

> ***CAUTION —***
> *Do not re-use O-rings when reconnecting refrigerant lines. Always replace O-rings.*

Tightening Torques (A/C receiver/drier)

- A/C lines to receiver/drier
  - 5/8 in. line . . . . . 20 Nm (15 ft-lb)
  - 3/4 in. line . . . . . 39 Nm (29 ft-lb)
  - 7/8 in. line . . . . . 42 Nm (31 ft-lb)
- Pressure switches
  - high/med . . . . . 25 Nm (18 ft-lb)
  - low . . . . . 19 Nm (14 ft-lb)
  - 3-way . . . . . 25 Nm (18 ft-lb)
- A/C line fitting to receiver/drier (self-locking nut) . . . . . 20 Nm (15 ft-lb)

9. Before recharging, evacuate system for at least 30 min. Recharge system following the equipment manufacturer's instructions.

A/C evaporator and expansion valve, removing and installing

1. Following the manufacturer's instructions, connect an approved refrigerant recovery/recycling/recharging unit to the A/C system and discharge system.

> ***WARNING —***
> *Do not discharge/charge the A/C system without proper equipment and training, damage to the vehicle and personal injury may result. Read warnings and cautions given under* **A/C system, warnings and cautions**.

2. Disconnect negative (–) battery terminal.

3. On cars with coolant expansion tank in rear of engine compartment, remove hose from overflow tank and disconnect electrical connector from level sensor in tank. Unbolt expansion tank and move to one side.

4. Unclip wire harness protective cover on rear bulkhead. Cut wire ties as necessary.

5. Remove bulkhead splash shield by removing six retaining screws. See Fig. 1.

6. Working in cowl area, remove mounting nut and screws at refrigerant line fitting. See Fig. 24.

NOTE —

Nut on refrigerant fitting may be fastened with loctite. Heating with a hot air blower may be necessary to loosen.

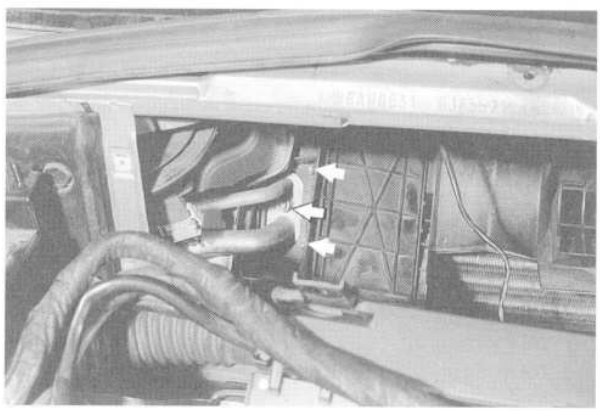

0011886

Fig. 24. Expansion valve refrigerant lines mounting nut and screws (**arrows**).

7. Remove center console and glove box. See **513 Interior Trim**.

8. Remove screws retaining ventilation duct and remove duct. See Fig. 25.

9. Cut wire ties holding wire harness to right side of heater housing and disconnect and move wiring to gain access to evaporator cover.

10. On cars with IHKR I and IHKA, unclip air distribution motor from right side of heater housing. See **Air distribution motors, replacing**.

11. Remove evaporator cover mounting screws and remove cover. See Fig. 26.

12. Remove screw from expansion valve and separate refrigerant line fitting from expansion valve. See Fig. 27. Discard O-rings.

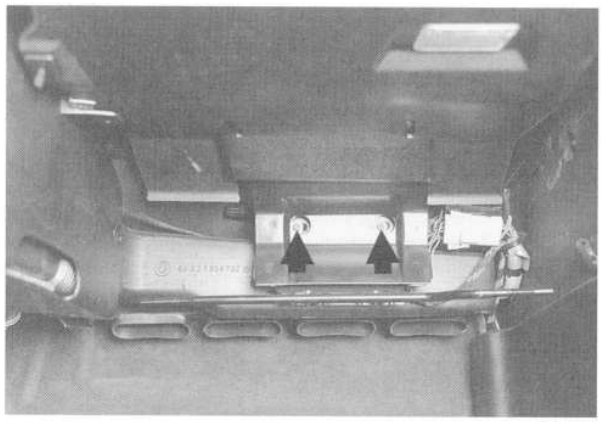

0011867

Fig. 25. Ventilation duct retaining screws (**arrows**). Glove box shown removed.

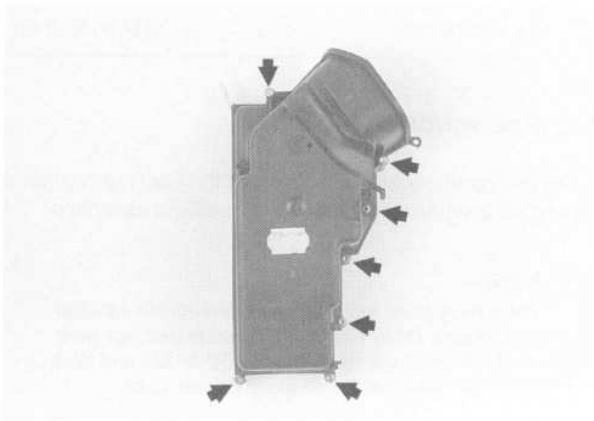

0011888

Fig. 26. Evaporator cover mounting screws (**arrows**).

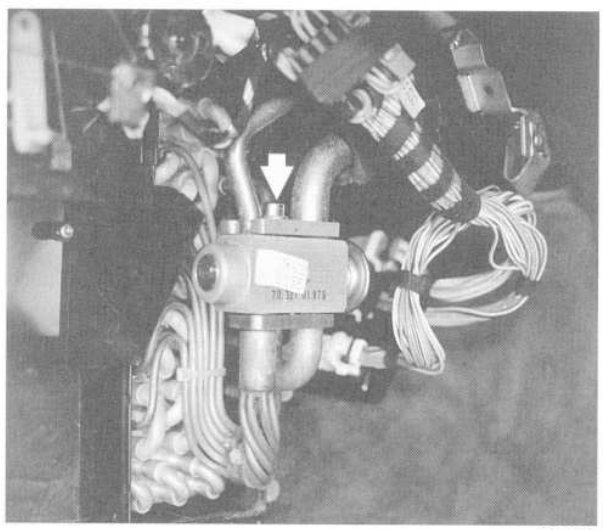

0011887

Fig. 27. Refrigerant line fitting mounting bolt at expansion valve (**arrow**).

13. Remove screws from top of expansion valve and remove expansion valve. See Fig. 28.

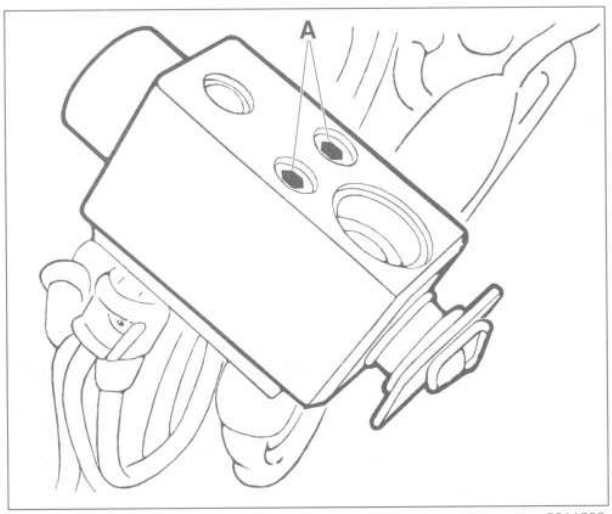

0011898

Fig. 28. Expansion valve mounting screws (**A**).

14. Slide evaporator out of unit housing.

15. Installation is reverse of removal. Replace O-rings at pressure fittings.

> ***CAUTION —***
> *Do not re-use O-rings when reconnecting refrigerant lines. Always replace O-rings.*

16. Before recharging, evacuate the system for at least 30 min. Recharge system following the equipment manufacturer's instructions. For capacities, see **Technical data, capacities**.

A/C evaporator temperature sensor, replacing

The evaporator temperature sensor is mounted in the left side of the evaporator housing behind the center console. The sensor can be reached after removing the carpeted trim panel from the left side of the console.

1. Disconnect negative (–) battery terminal.

2. On left side of center console, remove carpeted trim panel.

3. Disconnect electrical connector from evaporator temperature sensor and pull sensor straight out of evaporator housing. See Fig. 29.

4. Installation is reverse of removal. **Table e** lists evaporator temperature sensor test values.

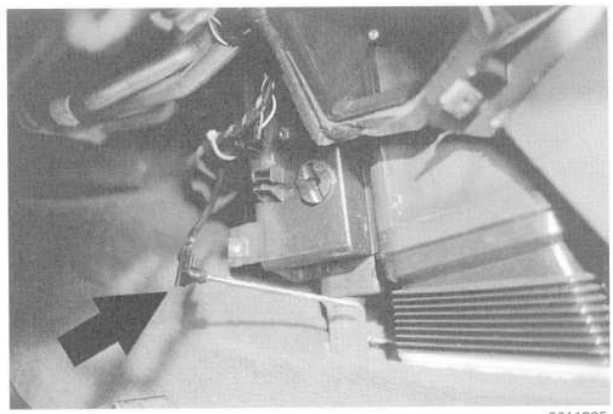

0011925

Fig. 29. Evaporator temperature sensor shown removed (**arrow**).

Table e. Evaporative Temperature Sensor Test Values

Test temp.	Resistance
-5 (23) °C (°F)	11.4...11.9 k ohms
0 (32) °C (°F)	8.8...9.2 k ohms
5 (41) °C (°F)	6.8...7.2 k ohms
10 (50) °C (°F)	5.3...5.6 k ohms
15 (59) °C (°F)	4.2...4.5 k ohms
20 (68) °C (°F)	3.3...3.6 k ohms
25 (77) °C (°F)	2.6...2.9 k ohms
30 (86) °C (°F)	2.1...2.3 k ohms
35 (95) °C (°F)	1.7...1.9 k ohms

A/C microfilter, replacing

1. From inside car, remove glove box. See **513 Interior Trim**.

2. Remove screws retaining right and left side carpeted console trim panels.

3. Remove trim panel from above glove box.

4. Remove two screws retaining ventilation duct and remove duct. See Fig. 25.

5. Remove cover from microfilter housing. See Fig. 30.

6. Pull the microfilter out of housing and discard.

7. Installation is the reverse of removal.

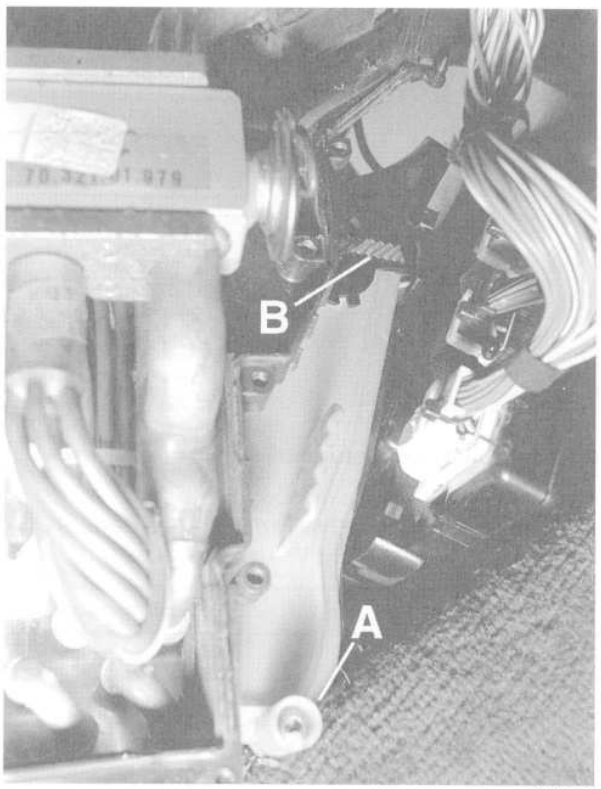

0011889

Fig. 30. Remove microfilter cover by removing screw (**A**) and turning locking lever (**B**) to release.

A/C control module, removing and installing

The A/C control module is mounted behind the evaporator on top of the transmission tunnel.

1. From inside the car remove glove box. See **513 Interior Trim**.

   NOTE —
   On early cars, the A/C control module may have harness connectors on both sides of module.

2. Remove screws retaining center console carpeted side panels at right and left sides. Remove panels.
3. Remove A/C control module electrical connector from left side of control unit, if necessary.
4. Remove screws retaining trim panel above glove box and remove trim panel, disengaging from clip at rear.
5. Remove two screws retaining ventilation duct and remove duct. See Fig. 25.
6. Separate all electrical connectors from A/C control module and push aside wiring harness.
7. Depress control module retaining clip and slide control module out from right side. See Fig. 31.

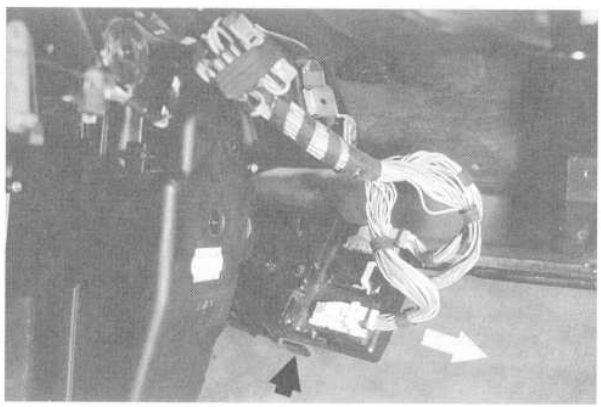

0011890

Fig. 31. Depress clip (**bottom arrow**) and slide control module out.

Technical data, refrigerant specifications

Table f. A/C System Refrigerant Capacities

	Quantity
R-12 refrigerant	1925 g ± 25 g (4.24 lbs.± 0.05 lbs.)
R-134a refrigerant	1550 g ± 25 g (3.42 lbs.± 0.05 lbs.)
PAG oil SP-10	200 ml ± 20 ml (6.8 oz. ± 0.7 oz.)

650 Radio

GENERAL 650-1

Radio Service 650-1
Radio, removing and installing 650-1
Front speaker (left foot well), removing and installing 650-2
Front speaker (right foot well), removing and installing 650-2
Rear speaker, removing and installing 650-2
Instrument panel speaker, removing and installing 650-2
Mirror triangle speakers, removing and installing 650-3
Radio connectors 650-3

TABLE

a. Radio connector terminal designation 1991 and later 650-3

GENERAL

This section covers the BMW factory installed sound system including radio and speaker removal, radio connectors and terminal designations. The antenna is incorporated into the rear window defogger.

NOTE —

In the event that radio replacement is necessary, BMW will replace the radio for a nominal fee on an exchange basis.

RADIO SERVICE

Radio, removing and installing

CAUTION —

- *Before beginning work on the radio or sound system verify that the radio is an original equipment BMW radio and that the wiring harness has not been modified.*
- *Aftermarket radios, amplifiers, speakers, etc. are beyond the scope of this manual. Servicing of aftermarket sound equipment should be referred to an authorized agent of the equipment in question.*
- *Do not remove radio or disconnect the battery without obtaining the anti-theft code.*

1. Swing open small square covers at left and right sides of radio.
2. Using hex key, turn screw counterclockwise to loosen. See Fig. 1.
3. Pull radio out of instrument panel opening.
4. Remove connector(s) from rear of radio.
5. Installation the reverse of removal.



0011845

Fig. 1. Hex key inserted in screw.

NOTE —

On 1991 and later cars, disconnect the large harness connection using a screwdriver. Pry up on connector until it slides up and disconnects from radio. See Fig. 2.

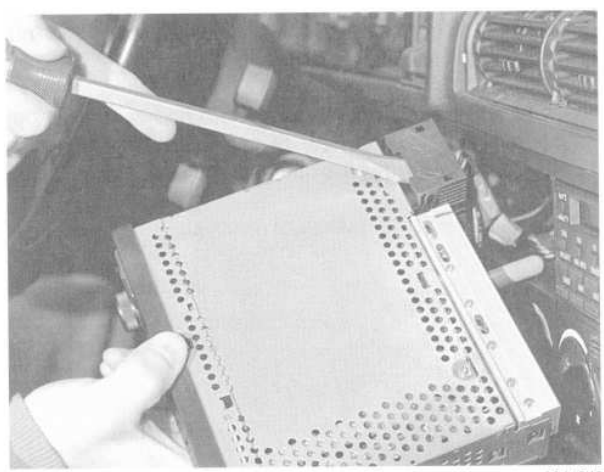

0011846

Fig. 2. Radio connector being removed on '91 and later model cars.

650

Front speaker (left foot well), removing and installing

1. Remove pedal cluster trim panel and lower instrument panel trim panel. See **513 Interior Trim**.
2. Pull off door seal from edge of speaker cover.
3. Remove hood release latch cover, if applicable, and remove bolt from center of hood latch release lever. Remove lever. See Fig. 3.

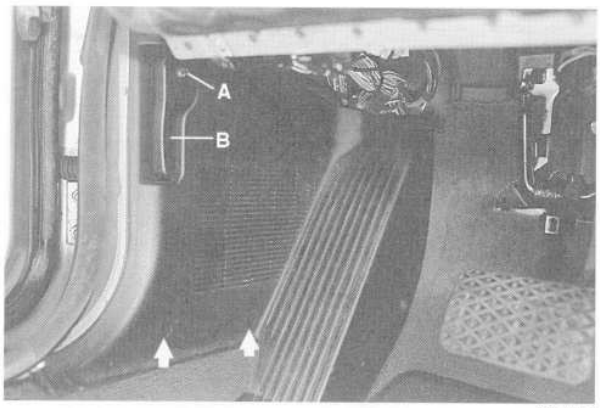

0011847

Fig. 3. Remove bolt (**A**), lever (**B**), and turn retainers 90° (**arrows**).

4. Rotate trim panel retainers 90° degrees and pull out. Remove speaker trim panel.
5. Disconnect speaker connector and remove nuts holding speaker to cover.
6. Installation is the reverse of removal.

Front speaker (right foot well), removing and installing

1. Remove door seal at edge of speaker cover and turn retainer screws 90°.
2. Pull speaker trim panel away from body and then pull panel back towards rear of car. Pull off speaker connector and remove the nuts retaining speaker to panel.
3. Installation is the reverse of removal.

Rear speaker, removing and installing

1. Remove speaker cover by prying up inner edge. See Fig. 4.

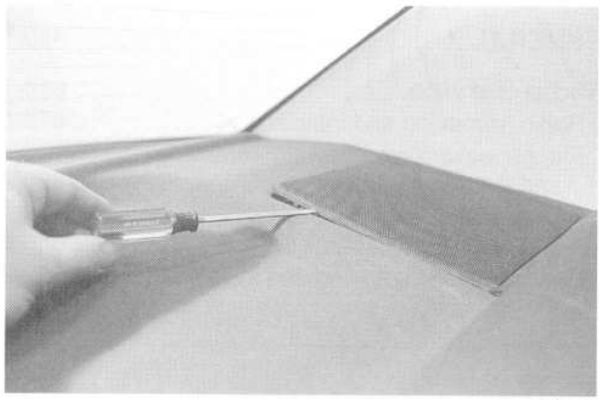

0011848

Fig. 4. Pry up inner edge of speaker cover.

2. Remove mounting screws and partially remove speaker.
3. Disconnect speaker connector and remove speaker.
4. Installation is the reverse of removal.

Instrument panel speaker, removing and installing

1. Place screwdriver under edge of cover and pry cover off.
2. Remove two screws and lift up speaker.
3. Disconnect speaker connector and remove loudspeaker.
4. Installation is the reverse of removal.

Mirror triangle speakers, removing and installing

1. Pry out small plastic cap in lower front corner of speaker and remove mounting screw. See Fig. 5.

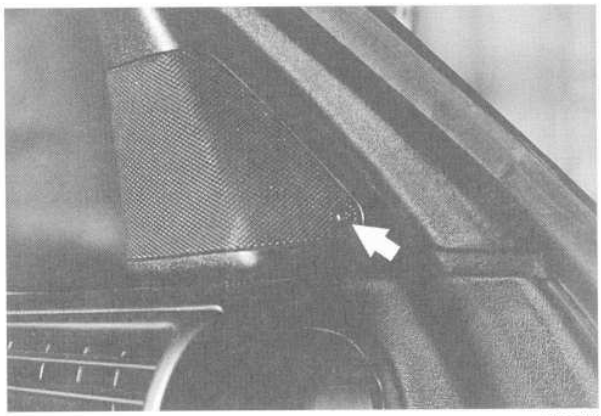

0011726

Fig. 5. Door loudspeaker mounting screw (**arrow**). Pry off plastic cover to access screw.

2. Grasp speaker firmly and pull back, releasing it from the retainer on top.
3. Disconnect speaker wires and remove speaker.
4. Installation is the reverse of removal.

Radio connectors

Table a lists radio connector pinouts for radios installed in later model vehicles covered by this manual. Early model vehicles (1989-1990) have the various terminals identified right on the connector. Fig. 6 shows the rear of the radio on 1991 and later cars. Use this along with **Table a** to identify the various terminals.

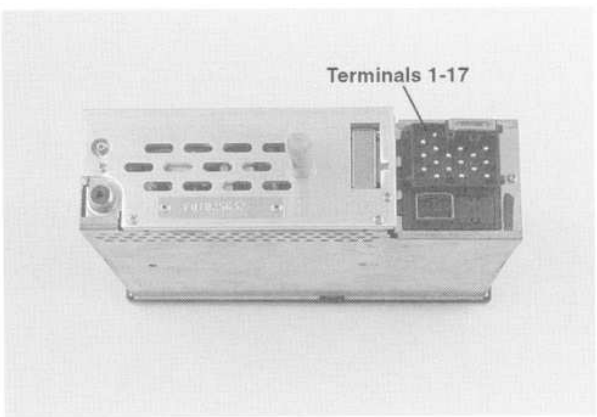

0011850

Fig. 6. Connector designations on 1991 and later radio. Use together with **Table a**.

Table a. Radio Connector Terminal Designation 1991 and later

Connector	Connector Terminal	Signal
	1	Speaker, left front +
	2	Speaker, right front +
	3	Speaker, left rear +
	4	Telephone mute feature
	5	Positive, Terminal R
	6	Front speaker, left
	7	I-bus connection
	8	Speaker, left front
	9	Constant positive, Terminal 30
	10	Speedometer signal for speed-sensitive volume control
	11	Speaker, right front
	12	Speaker, left rear
	13	Illumination terminal 58G
	14	Speaker, right rear
	15	Ground Terminal 31
	16	Automatic antenna or window antenna amplifier or premium sound system amplifier
	17	Not assigned

720 Seat Belts

GENERAL 720-1
FRONT SEAT BELT ASSEMBLY 720-1
Front seat belt height adjuster cable, replacing 720-1
Front seat belt lock tensioner, deactivating . . . 720-2
Front seat belt reel, removing and installing. . . 720-3
REAR SEAT BELT ASSEMBLY 720-3
Rear seat belts, removing and installing. 720-3

GENERAL

The seat belt reel should lock when driving quickly through curves, during severe braking or during a collision. The automatic reel does not require any servicing and should never be opened. Belts that do not retract and/or lock properly should be promptly replaced.

WARNING —

- *For maximum protection from injury, seat belts should be replaced as a set (including all hardware), if they are subject to occupant loading in a collision.*
- *Seat belts should not be modified or repaired. The seat belt anchorage points should not be changed or modified.*
- *Do not install seats belts or seat belt hardware purchased from an auto-recycler or salvage yard. Only BMW original replacement seat belts, hardware and mounting bolts should be used.*
- *Do not bleach or dye seat belt webbing. Webbing that is severely faded or re-dyed will not meet the strength requirements and must be replaced.*
- *Seat belts should be periodically inspected for webbing defects such as cuts or pulled threads.*

FRONT SEAT BELT ASSEMBLY

Fig. 2 shows an exploded view of the front seat belt assembly. Note that the front seat belt lock assembly varies depending on model year.

WARNING —

On late models cars, an automatic seat belt lock tensioner is used on the front seats. A mechanical impact sensor activates the tensioner in the case of a head-on collision and retracts the seat belt approximately 55 mm (2 in.).This belt lock tensioner must be deactivated before servicing the seat. See **Front seat belt lock tensioner, disabling** *for identifying and disabling the lock tensioner.*

Front seat belt height adjuster cable, replacing

A cable-driven front seat belt adjuster is used on the front seats. The upper seat belt anchors on the B-pillar adjust automatically in height when the front seats are moved forward and back.

1. Disconnect height adjusting cable from under seat. Remove seat. See **520 Seats**.
2. Carefully pry off cable wheel assembly from floor. Pry up door sill plate and peel back carpet to access cable.
3. Remove trim cover from B-pillar. See Fig. 1.



0011857

Fig. 1. B-pillar trim panel retaining clips (**arrows**).

4. Working at upper guide on B-pillar, press down tongue retaining cable end and remove cable from reversing wheel and guides.

5. Installation is reverse of installation. Be sure to reattach all cable retaining clips.

Front seat belt lock tensioner, deactivating

1. Working at side of seat, pry up concealing flap on tensioner.

2. Turn screw beneath flap clockwise until display changes from green to red. See Fig. 3.

3. To activate lock tensioner, turn screw counterclockwise until green appears in window.

Tightening Torque

- Front seat belt lock mounting bolt. . . . 48 Nm (36 ft-lb)

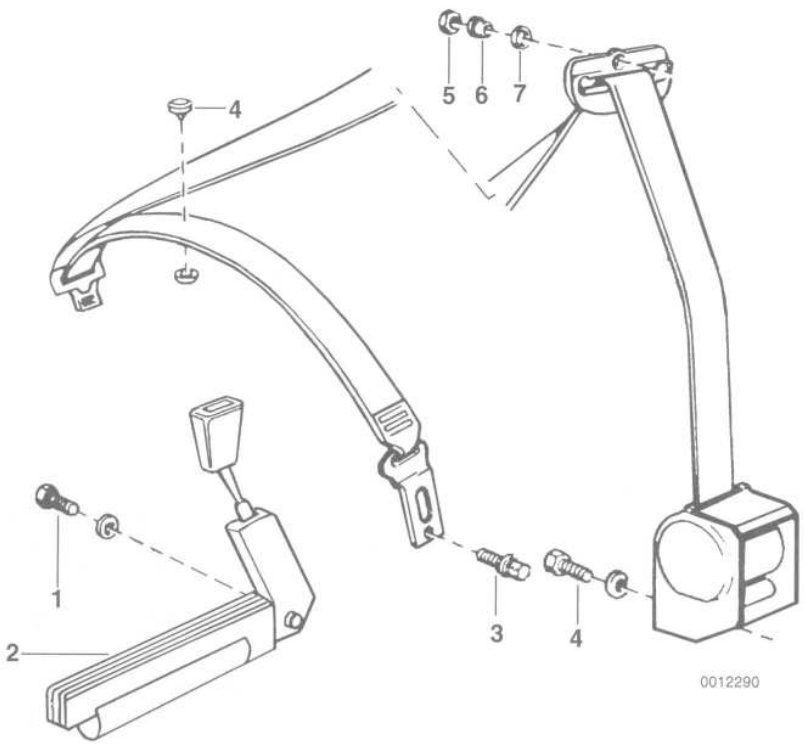

1. Bolt
2. Belt lock with tensioner, late cars - always deactivate
3. Belt lock without tensioner, early cars
4. Button
5. Nut
6. Bushing
7. Thrust washer
8. Sliding piece
9. Bracket
10. Torx bolt
11. Hex bolt
12. Height adjuster cable assembly
13. Seat belt height adjuster
14. Socket head screw
15. Socket head screw
16. Cable holder

00011815

Fig. 2. Exploded view of front seat belt assembly.

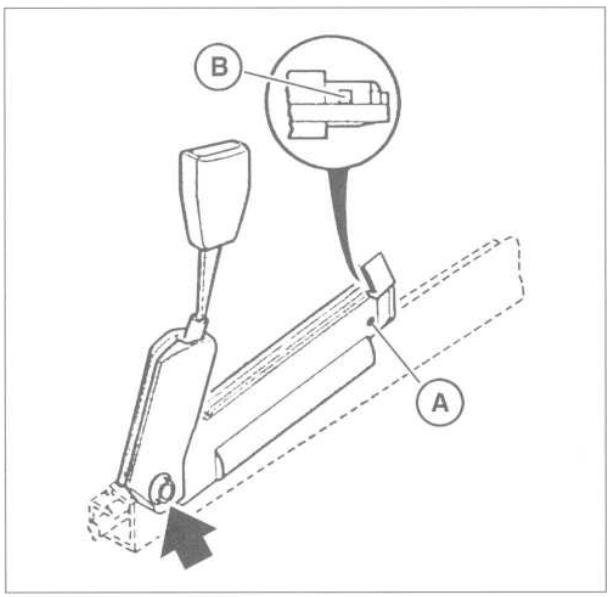

0011853

Fig. 3. Front seat belt lock tensioner screw (**A**) and display (**B**). Seat belt lock mounting bolt shown at **arrow**.

Front seat belt reel, removing and installing

1. Remove seat belt anchor bolt from beneath front seat.
2. Starting at upper corners, peel rubber door seals away from B-pillar trim.
3. Remove trim panel from B-pillar. See Fig. 1.
4. Remove door lock/latch mounting screws at B-Pillar and partially remove latch.
5. Remove seat belt guide bolt on B-pillar and remove guide. Remove two bolts holding cross bracket to B-pillar.
6. Remove seat belt reel mounting bolt. Disconnect harness connector from reel assembly, where applicable. Remove reel with seat belt.
7. Installation is reverse of removal.

Tightening Torque

- Front seat belt guide bolt . . . . . 48 Nm (36 ft-lb)
- Front seat belt height control bolt. . . . 24 Nm (17 ft-lb)
- Front seat belt on B-pillar. . . . . 31 Nm (23 ft-lb)
- Front seat belt reel mounting bolt. . . . 48 Nm (36 ft-lb)

REAR SEAT BELT ASSEMBLY

Fig. 4 shows an exploded view of the rear seat belt assembly.

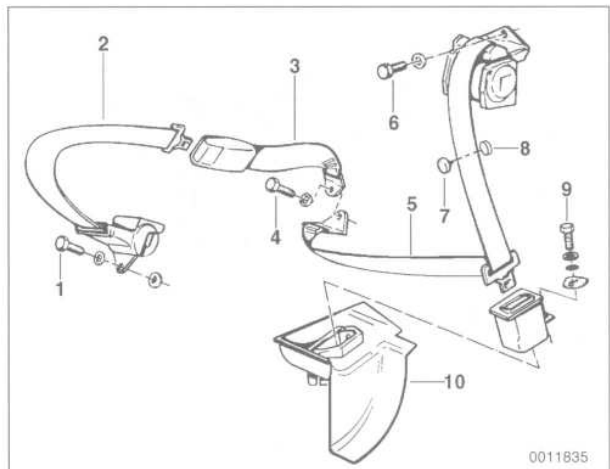

0011835

1. Bolt
2. Center seat belt
3. Center seat belt lock
4. Bolt
5. Outside shoulder belt
6. Bolt
7. Button
8. Button
9. Bolt
10. Shoulder belt lock trim

0011835

Fig. 4. Rear seat belt assembly.

Rear seat belts, removing and installing

1. Remove rear seat and back rest. See **520 Seats**.
2. Remove seat belt anchor bolt from beneath rear seat.
3. Remove retaining clips and partially lift up parcel shelf. See Fig. 5.

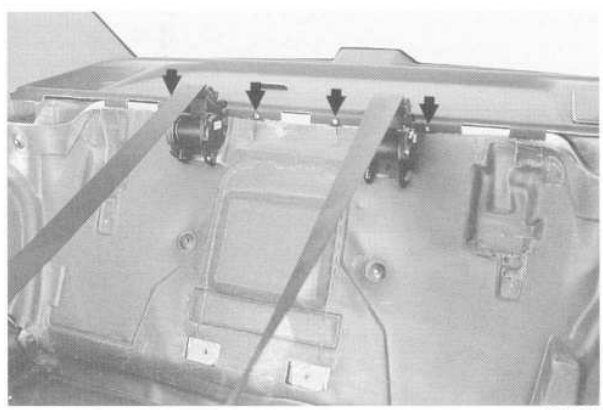

0011858

Fig. 5. Parcel shelf retaining clips (**arrows**).

4. Remove seat belt reel mounting bolt and remove seat belt and reel. See Fig. 6.

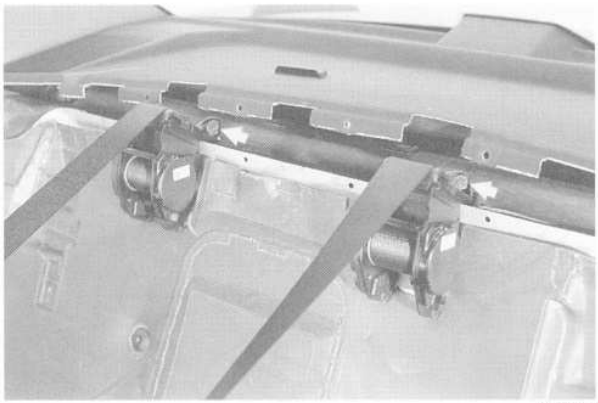

0011859

Fig. 6. Seat belt reel mounting bolts (**arrows**).

Tightening Torque

- Rear seat belt reel to body . . . . . 48 Nm (36 ft-lb)

721 Airbag System (SRS)

GENERAL 721-1
SRS Warning Light and Fault Display. 721-1
AIR BAG I, AIRBAG II. 721-2
Driver's side airbag, removing and installing . 721-2
Passenger's side airbag, removing and installing (Airbag II) 721-3
Airbag contact ring, replacing 721-4
Airbag crash sensor, replacing (Airbag I). 721-5

GENERAL

This repair group covers only removal and installation of airbag components. Airbag system repair and fault diagnosis is not covered here. Diagnostics, component testing, and repair should be carried out by properly trained BMW service technicians using specialized test equipment.

Two versions of SRS systems are installed on E-34 cars: Airbag I and Airbag II. Airbag I can be identified by the orange crash sensors located on the front wheel wells and the absence of a passenger's side airbag. Airbag II is equipped with both a driver's side airbag and a passenger's side airbag. On Airbag II vehicles, the crash sensors are integrated into the central control module, located under the center of the rear seat.

NOTE —

Special test equipment is required to retrieve SRS fault codes, diagnose system faults, and reset/turn off the SRS indicator light. The SRS indicator light will remain on until any problem has been corrected and the fault memory has been cleared.

When working or servicing cars equipped with SRS, the following precautions must be observed to prevent injury.

WARNING —

- *The airbag(s) are inflated by an explosive device. Handled improperly or without adequate safeguards, the system can be very dangerous. Special precautions must be observed prior to any work at or near the steering wheel or steering column, including the pedal assembly.*
- *The airbag is a vehicle safety system. Serious injury may result if system service is attempted by persons unfamiliar with the BMW SRS and its approved service procedures. BMW advises that all inspection and service be performed by an authorized BMW dealer.*
- *Always disconnect the battery and cover the negative (–) battery terminal with an insulator before starting diagnostic, troubleshooting or service work not associated with SRS, and before doing any welding on the car.*

WARNING —

- *Always replace any airbag system component that has been mechanically damaged (example: dented or cracked).*
- *If an airbag has been activated due to an accident, BMW specifies that all SRS components be replaced. The wiring harness, if undamaged, may be reused. For more information on post-collision SRS service, see an authorized BMW dealer.*
- *Do not allow the airbag unit to come in contact with cleaning solutions or grease. Never subject an airbag unit to temperatures above 212° F (100° C). Never install an airbag unit that has been dropped from a height of $^1/_2$ meter ($1^1/_2$ ft.) or more.*
- *When reconnecting the battery, no person should be inside the vehicle.*
- *Always place an airbag unit that has been removed from its packaging with the padded side facing upward. Do not leave an airbag unit unattended.*
- *If the airbag unit or airbag control module has been dropped from a height of 0.5 meter (19.7 in.) or more, the airbag unit should not be installed.*

SRS Warning Light and Fault Display

The airbag system utilizes a self diagnostic control module to detect and store system faults. If a fault is detected, the SRS indicator in the instrument cluster comes on and stays on.

When the ignition key is turned on, the indicator light will illuminate for approximately 4-6 seconds. The illuminated light indicates the self-test of the electronic control/monitoring module, the ignitors and sensor circuits, and the system wiring. The airbag system should be inspected by an authorized BMW dealer if the indicator light does not come on, if it does not go out in approximately 4-6 seconds after switching on the ignition, or if the light comes on during driving. If the system has detected a fault, the light will come on and stay on.

AIRBAG I, AIRBAG II

The airbag system consists of the following components: an electronic control/monitoring module, an indicator light in the instrument panel, and an inflatable airbag equipped with a gas generator in the steering wheel, and where applicable, an inflatable airbag equipped with a gas generator in the passenger side of the instrument panel. In addition to the airbags, the vehicle is equipped with a knee bar(s) for extra protection. Fig. 1 shows Airbag I system components.

Driver's side airbag, removing and installing

1. Disconnect negative (–) battery cable and cover negative terminal with an insulating material.

> ***WARNING —***
> *On cars with Airbag II: If the Airbag system has detected a fault (SRS indicator illuminated), a waiting period of at least ten minutes must be observed before removing the airbag from the steering wheel. This will allow the system capacitor to discharge, reducing the possibility of a trigger pulse being generated to the airbag.*

2. Remove lower steering column trim mounting screws and remove the lower trim.

3. Remove orange SRS connector from its holder and carefully separate connector. See Fig. 2.

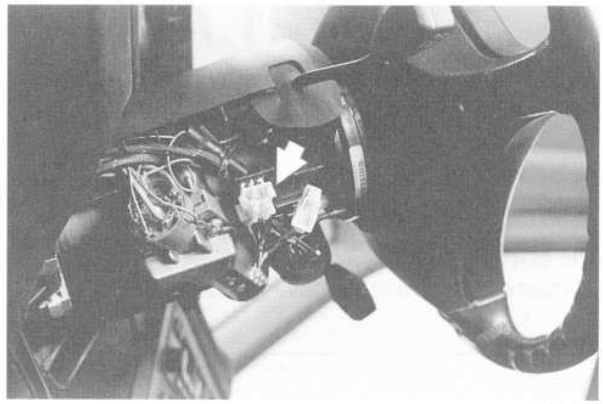

0011891

Fig. 2. Orange SRS connector below steering column (**arrow**).

4. Working behind steering wheel, completely loosen Torx screws (T30 or T27) while holding airbag in place. See Fig. 3. Support airbag unit to prevent it from falling out.

5. Carefully lift airbag unit off steering wheel and disconnect orange harness connector from rear of airbag unit. Store airbag in safe place. See Fig. 4.

6. Install steering wheel as described in **320 Steering and Wheel Alignment**.

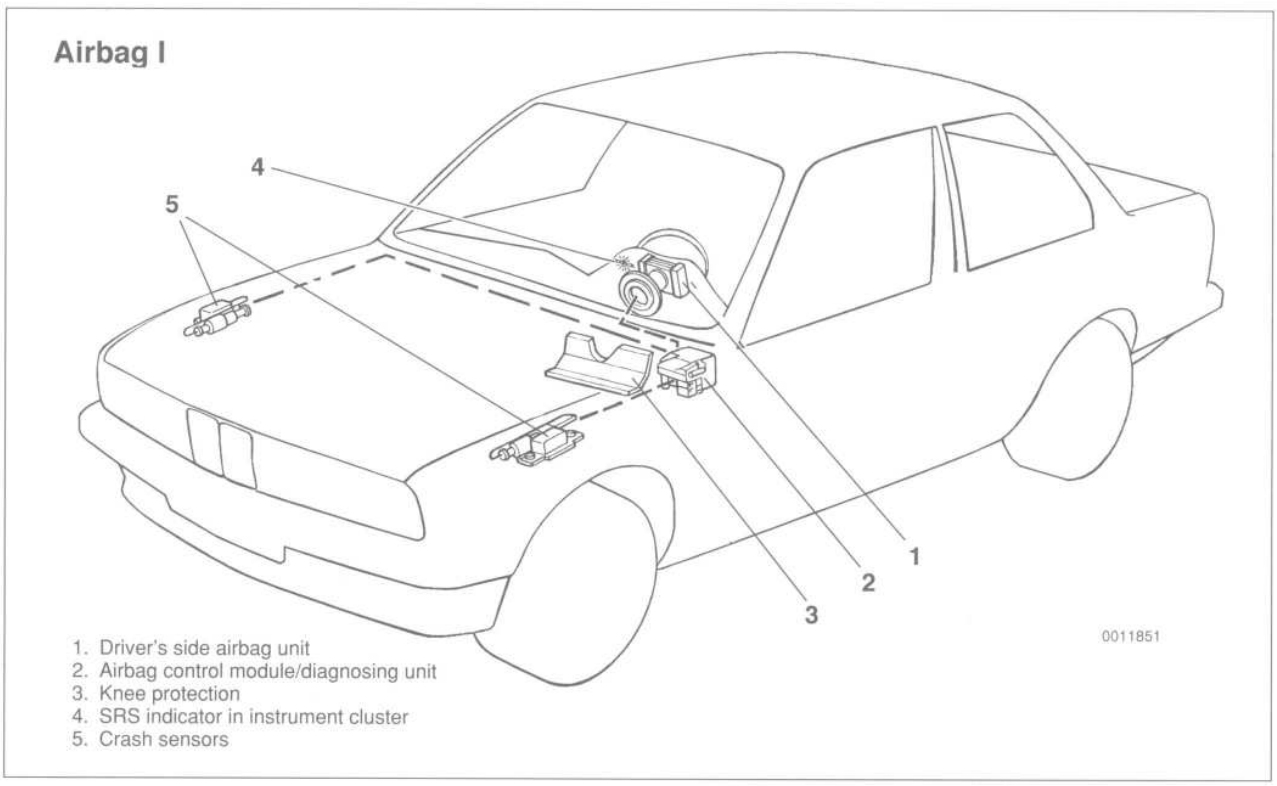

1. Driver's side airbag unit
2. Airbag control module/diagnosing unit
3. Knee protection
4. SRS indicator in instrument cluster
5. Crash sensors

Fig. 1. Airbag I system components.

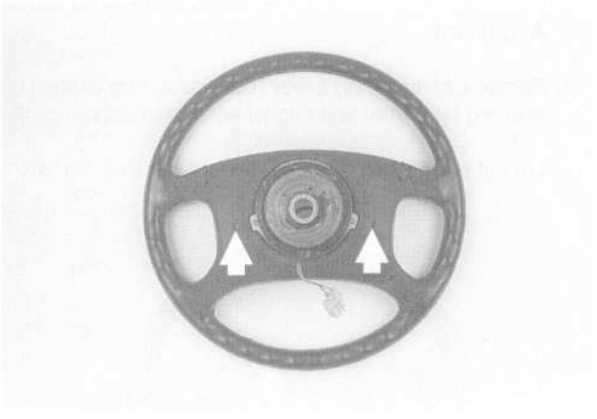

0011893

Fig. 3. Driver's side airbag unit mounting screws (**arrows**).

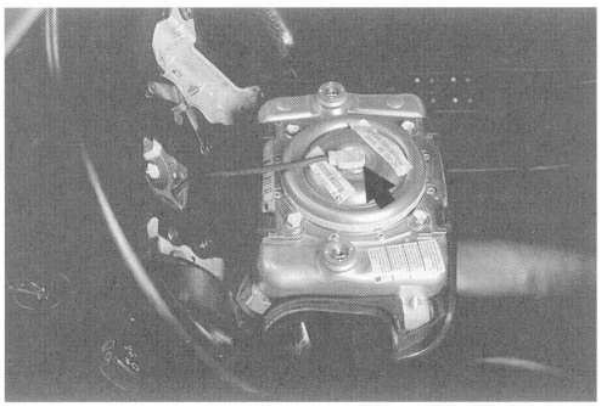

0011892

Fig. 4. Driver's side airbag unit harness connector (**arrow**).

WARNING —

- *Store the removed airbag unit with the horn pad facing up. If stored facing down, accidental deployment could propel it violently into the air, causing injury.*
- *Once an airbag is removed, the car must not be driven. The airbag unit should be stored in a safe place with the horn pad facing up.*
- *Do not connect the battery with the airbag disconnected. A fault code will be stored, causing the SRS indication SRS light. Special tools are needed to reset the fault memory.*
- *Special instructions apply when installing airbag equipped steering wheel. See* **320 Steering and Wheel Alignment**.

7. Place airbag unit into position and connect harness connector to rear of airbag unit. Tighten right side screw on airbag first (as viewed from the driver's seat), then left side screw.

Tightening Torques

- Airbag unit to steering wheel
  - Airbag I . . . . . 8 Nm (71 in-lb)
  - Airbag II . . . . . 2 Nm (18 in-lb)

8. Connect orange SRS connector beneath steering column and place connector in holder.

9. The remainder of installation is reverse of removal. Reconnect the battery last.

WARNING —

Once the airbag unit is installed and all other service procedures have been completed, start the engine and check that the SRS warning light goes out. If the warning light stays on, the SRS system will not function as designed. Have the system diagnosed and repaired by an authorized BMW dealer.

Passenger's side airbag, removing and installing (Airbag II)

1. Disconnect negative (–) battery cable and cover negative terminal with an insulating material.

2. Carefully lift out cover from top of passenger's side airbag on instrument panel. See Fig. 5.

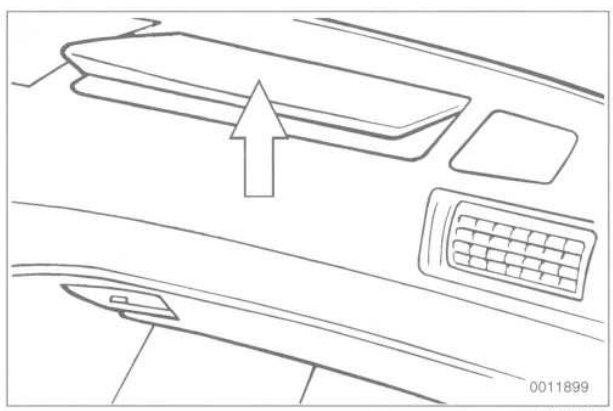

0011899

0011899

Fig. 5. Passenger's side airbag cover on cars with Airbag II. Carefully lift out cover from front.

3. Remove passenger's side airbag mounting bolts. See Fig. 6.

4. Disconnect electrical connectors from rear of air bag unit and remove airbag. See Fig. 7. Place airbag unit in safe location with padded cushion facing upward.

5. Installation is reverse of removal. Make sure wiring harness is not pinched when installing airbag unit in instrument panel.

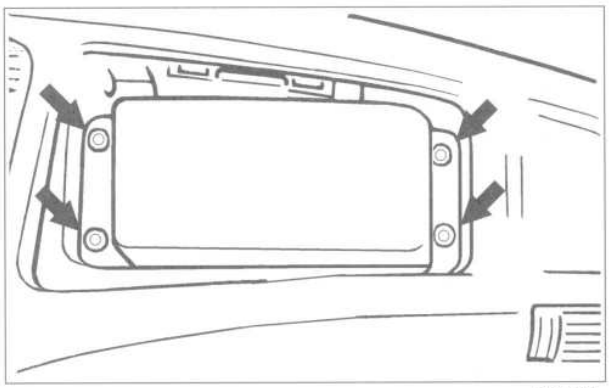

0011900

Fig. 6. Passenger's side airbag mounting bolts (**arrows**).

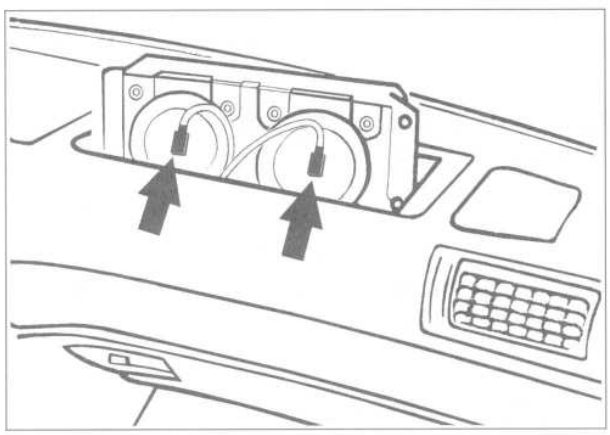

0011901

Fig. 7. Passenger side airbag harness connectors (**arrows**).

> ***WARNING —***
> - *Store the removed airbag unit with the horn pad facing up. If stored facing down, accidental deployment could propel it violently into the air, causing injury.*
> - *Once the airbag unit is installed and all other service procedures have been completed, start the engine and check that the SRS warning light goes out. If the light stays on, the SRS system will not function as designed. Have the system diagnosed and repaired by an authorized BMW dealer.*

Airbag contact ring, replacing

The airbag contact ring is mounted to the rear of the steering wheel and is made up of a wire ribbon that coils and uncoils as the steering wheel is turned. The contact ring assures continuous electrical contact to the driver's side airbag unit.

1. Disconnect negative (–) battery cable and cover negative terminal with an insulating material.
2. Remove driver's side airbag from steering wheel. See **Driver's side airbag, removing and installing**.

AIRBAG I, AIRBAG II

3. Remove steering wheel. See **320 Steering and Wheel Alignment**.
4. Remove contact ring cover (flat plastic ring containing warning text) from steering wheel, if applicable.
5. Lift out plastic lock from steering wheel. See Fig. 8.

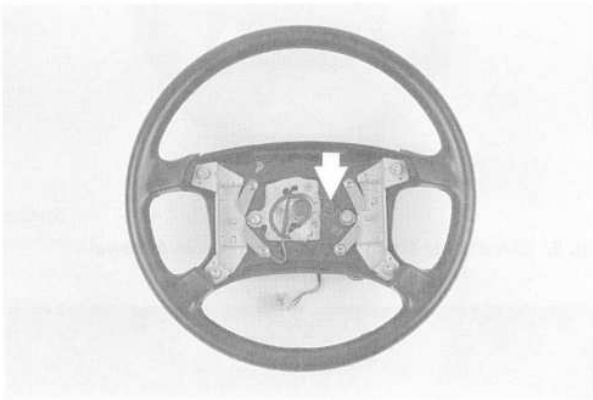

0011903

Fig. 8. Airbag contact ring lock (**arrow**). Pry out lock and remove spring from behind lock.

> ***WARNING —***
> - *The contact ring lock holds the contact ring in the centered position. Once the lock is removed from the steering wheel, the contact ring is free to rotate. Do not allow the contact ring to rotate once the lock is removed.*
> - *If the contact ring is accidentally rotated out of its center position, turn the contact ring either fully clockwise or counterclockwise, then turn the contact ring in the opposite direction 3 complete revolutions until the alignment arrow can be seen through the lock opening.*

6. Remove nuts or screws from contact ring. See Fig. 9. Disconnect wire lead(s) and remove contact ring from rear of steering wheel.

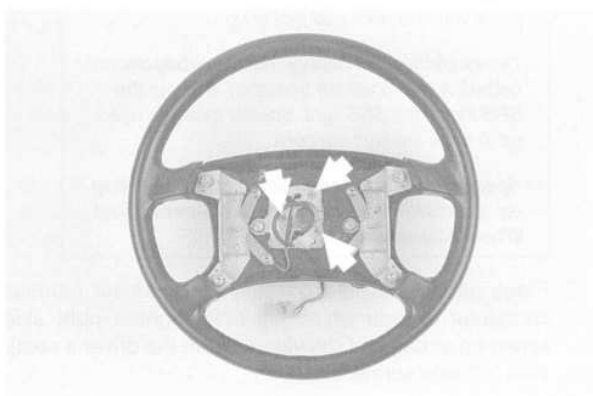

0011904

Fig. 9. Airbag contact ring mounting nuts (**arrows**) on cars with Airbag I. Contact ring used on cars with Airbag II uses screws to mount contact ring.

7. Installation is reverse of removal, noting the following:

   - Coat horn slip ring (electrical contact ring) with CRC® copper paste before installing steering wheel
   - When installing contact ring lock, make sure lock spring engages pins on lock and lock cover
   - Special instructions apply when installing airbag equipped steering wheel. See **320 Steering and Wheel Alignment**.

   • **Airbag I**

   - Route wiring lead for horn through square opening in steering wheel
   - When installing a new contact ring from BMW, remove locking screw after installing the contact ring to steering wheel. See Fig. 10.
   - Lock contact ring mounting nuts in place using lacquer paint or varnish

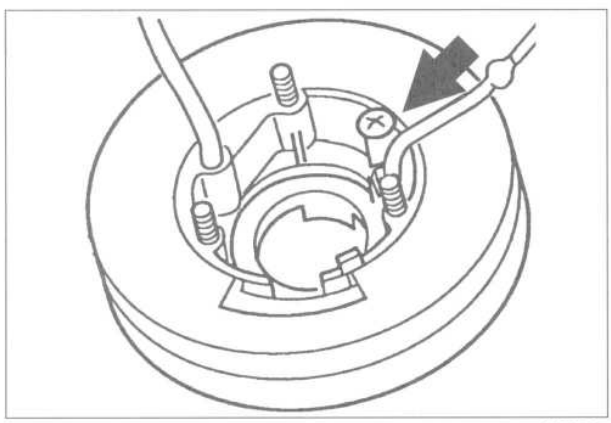

0011902

Fig. 10. Airbag I contact ring locking screw (**arrow**), as installed on new replacement part from BMW.

   • **Airbag II**

   - Connect ground lead at contact ring
   - When installing a new contact ring from BMW, remove locking pin after installing contact ring to steering wheel. See Fig. 11.

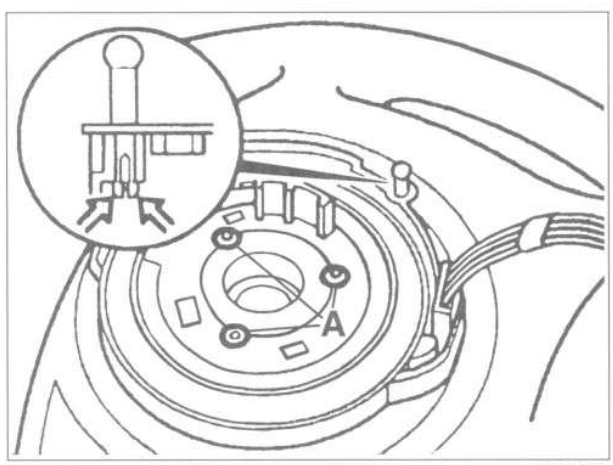

0011906

Fig. 11. Airbag II contact ring locking pin (**arrows**), as installed on new replacement part from BMW. Contact ring mounting screws shown at **A**.

Airbag crash sensor, replacing (Airbag I)

The Airbag I system uses two crash sensors mounted in the engine compartment on the left and right wheel arches. The sensors are identified by their orange color.

1. Disconnect negative (–) battery cable and cover negative terminal with an insulating material.

2. Remove lower steering column trim mounting screws and remove the lower trim. Remove orange SRS connector from its holder and carefully separate connector.

3. Working in engine compartment, remove anti-tamper Torx screws from crash sensor. Remove sensor and disconnect harness connector. See Fig. 12.

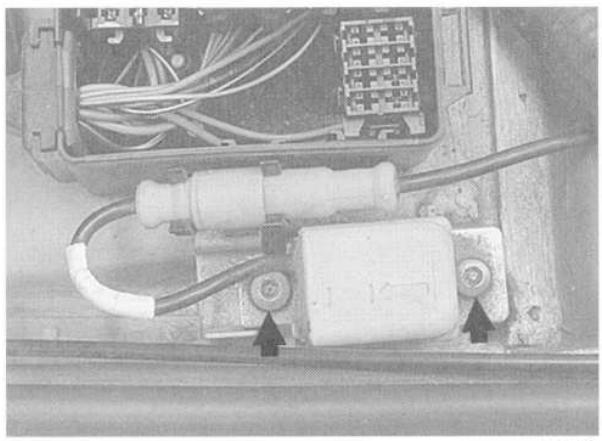

0011905

Fig. 12. Airbag crash sensor mounting screws (**arrows**) on cars with Airbag I. Note Torx screws with anti-tamper pin in screw.

4. Installation is reverse of removal. Make sure arrow on sensor faces forward when installing sensor.

> ***WARNING —***
> *Once the airbag unit is installed and all other service procedures have been completed, start the engine and check that the SRS warning light goes out. If the warning light stays on, the SRS system will not function as designed. Have the system diagnosed and repaired by an authorized BMW dealer.*

Tightening Torque

- Airbag crash sensor to sensor mounting (Airbag I) . . . . . 10 Nm (89 in-lb)

ELECTRICAL WIRING DIAGRAMS

GENERAL EWD-1

ELECTRICAL WIRING DIAGRAMS EWD-2

ABS/ASC EWD-115
Airbag
(Supplemental Restaint System) EWD-134
Air Conditioning and Heating EWD-122
Anti–theft
(Coded Driveaway Protection) EWD-136
Charging System EWD-65
Component Locator EWD-207
Cruise Control EWD-112
Data Link Connector EWD-96
Daytime Running Lights EWD-161
Defoggers EWD-150
Electrochromatic Mirrors EWD-195
Engine Cooling (Auxiliary Cooling Fan/
E–box Cooling Fan) EWD-100
Exterior Lights EWD-165
Engine Management
(Engine Controls) EWD-68
Ground Distribution EWD-35
Headlights/Foglights EWD-161
Heated Seats EWD-200
Horns EWD-140
Instrument Panel EWD-152
Interior Lights/Illumination EWD-180
Lamp Monitor/Warning EWD-159
Memory Mirror EWD-196
Memory Seat EWD-201
Power Distribution EWD-2
Power Door Locks EWD-186
Power Mirrors EWD-194
Power Seats EWD-198
Power Sunroof EWD-203
Power Windows EWD-191
Radio Antenna EWD-150
Radio/Cassette/CD/Speakers EWD-205
Servotronic Steering
(Electronic Power Steering) EWD-111
Shift Interlock EWD-108
Starting EWD-61
Transmission Electronics EWD-104
Warning System: Chimes EWD-159
Wiper/Washer EWD-142

GENERAL

This section contains wiring diagrams for 1989 through 1995 BMW 5–series models.

WARNING—

On cars equipped with Airbags, special precautions apply to any electrical system testing or repair. The airbag unit is an explosive device and must be handled with extreme care. Before starting any work on an airbag equipped car, refer to the warnings and cautions in **69 Seatbelts, Airbags**.

CAUTION—

- *Always switch the ignition off and remove the negative (–) battery cable before removing any electrical components.*
- *Before disconnecting the battery, be sure to obtain anti–theft radio code.*
- *Connect and disconnect ignition system wires, multiple connectors, and ignition test equipment leads only while ignition is switched off.*
- *Always switch a test meter to the appropriate function and range before making test connections.*

Power Distribution

1989 525i & 535i (1 of 4)

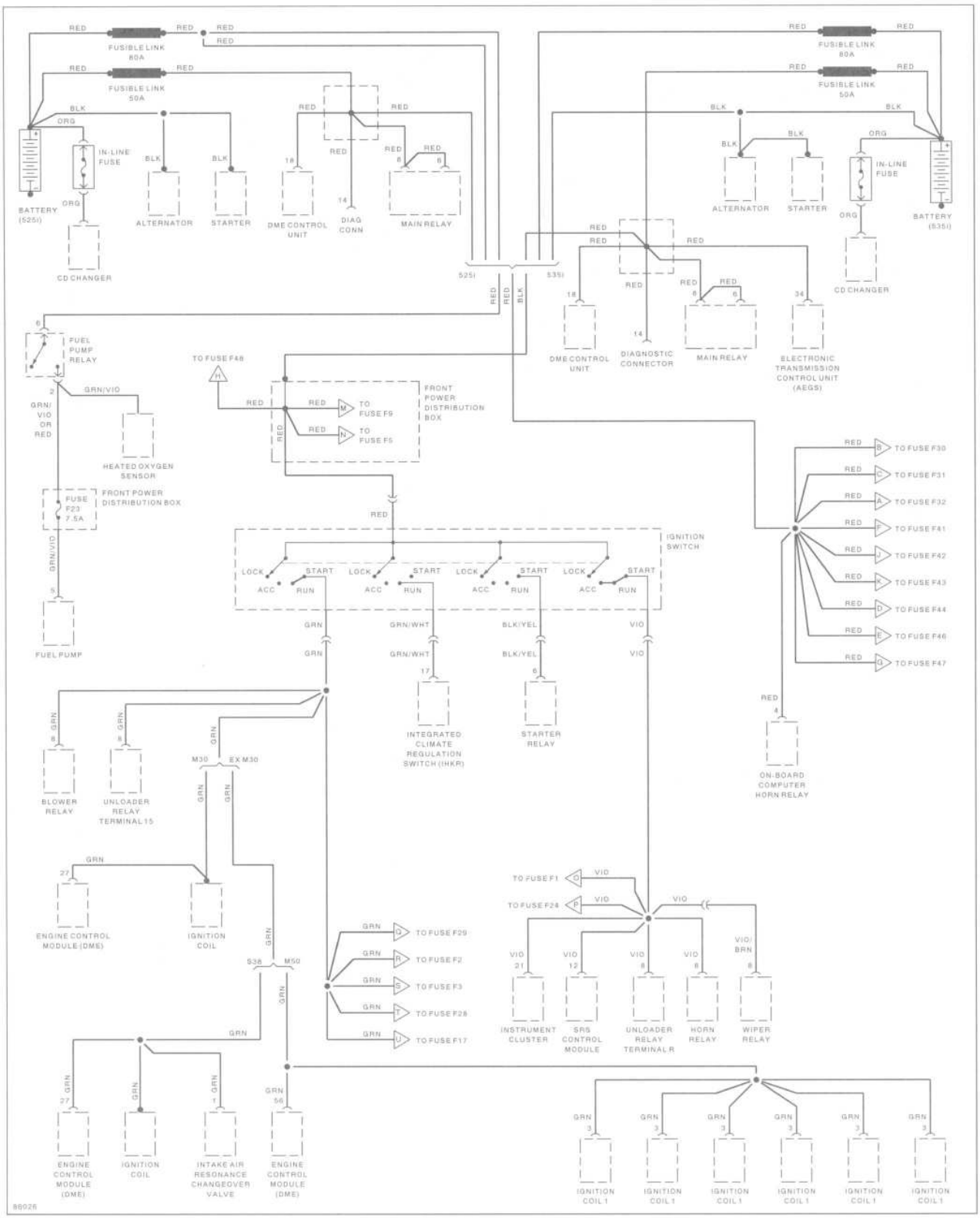

Power Distribution

1989 525i & 535i (2 of 4)

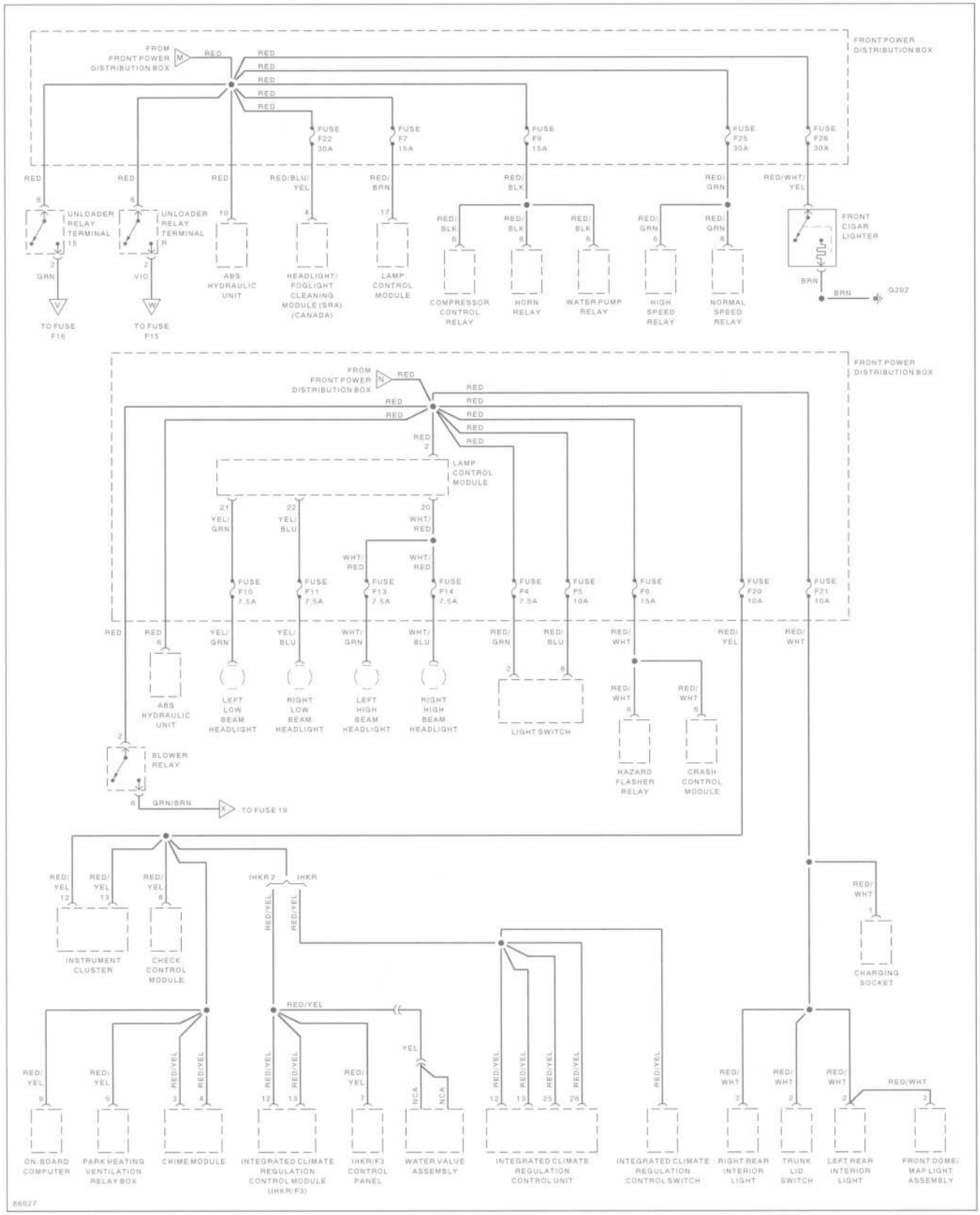

Power Distribution

1989 525i & 535i (3 of 4)

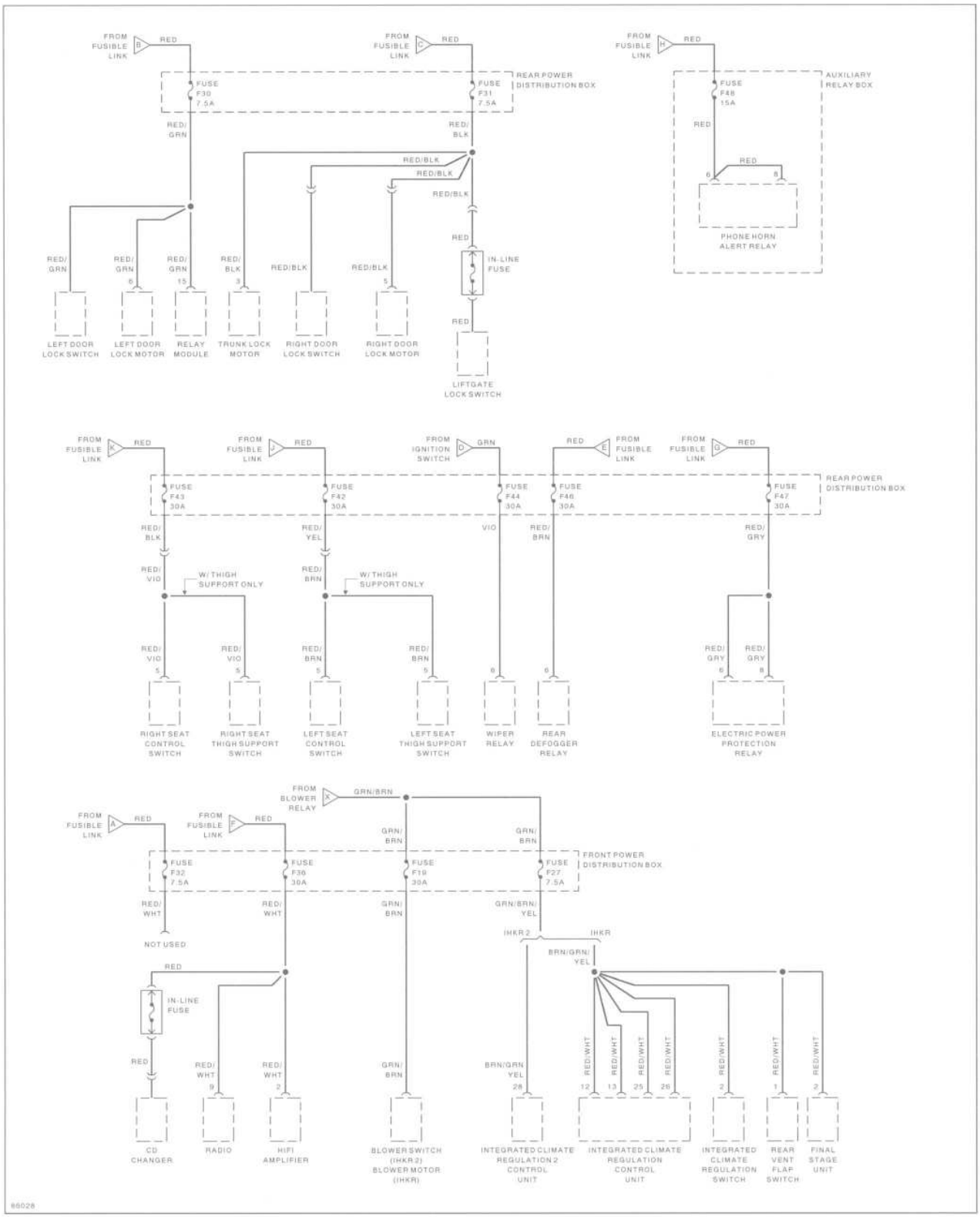

Power Distribution

1989 525i & 535i (4 of 4)

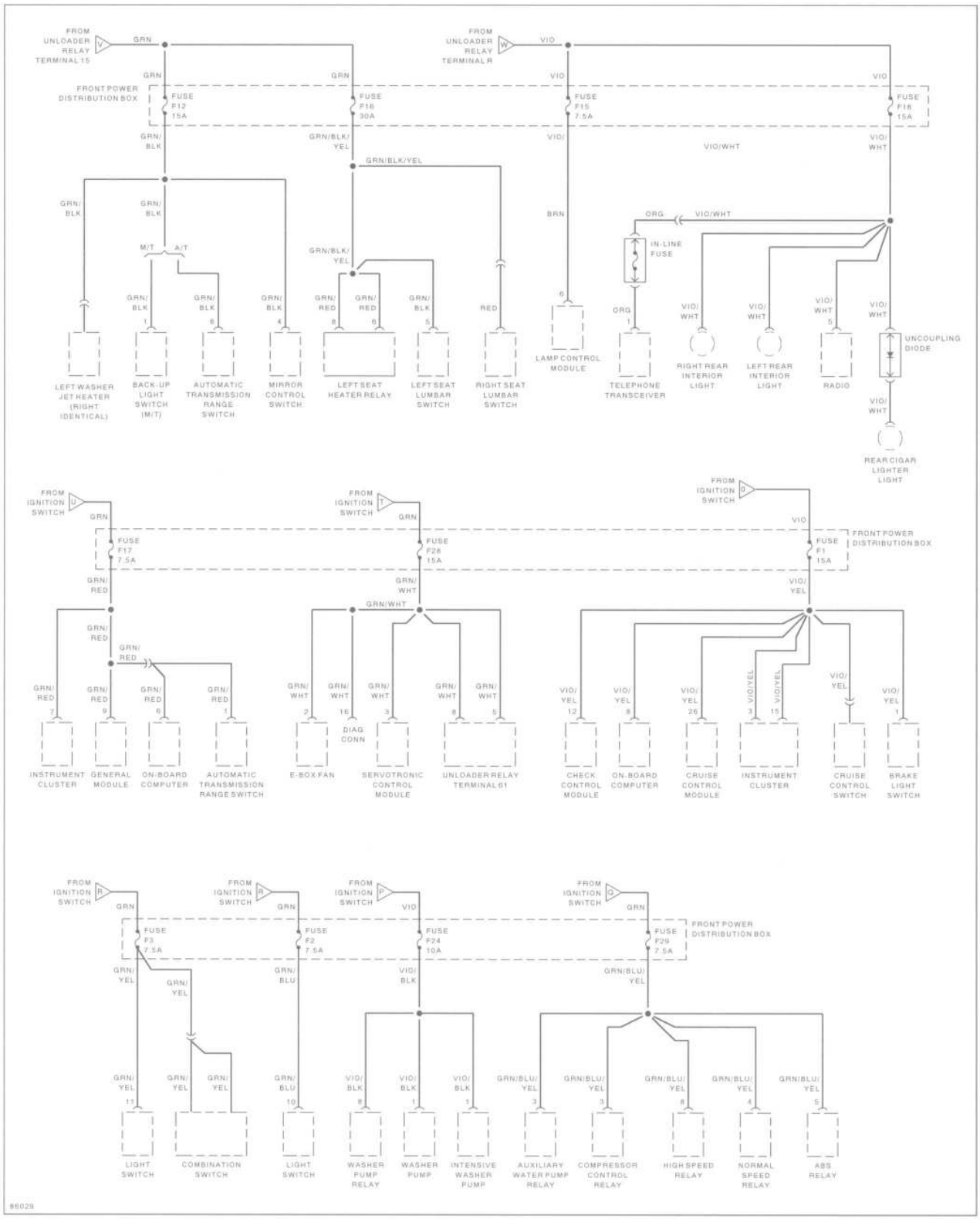

Power Distribution

1990 525i & 535i (1 of 4)

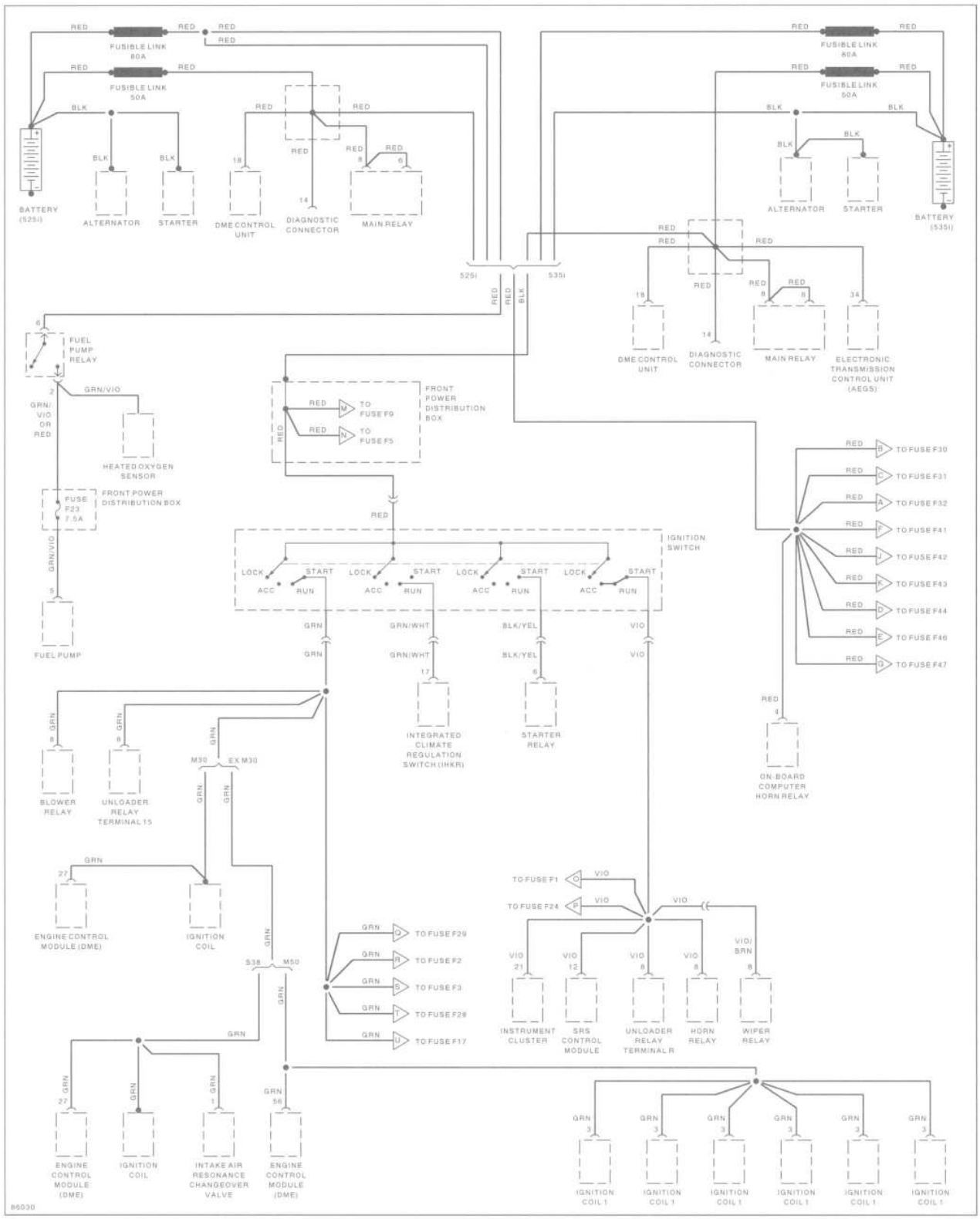

Power Distribution

1990 525i & 535i (2 of 4)

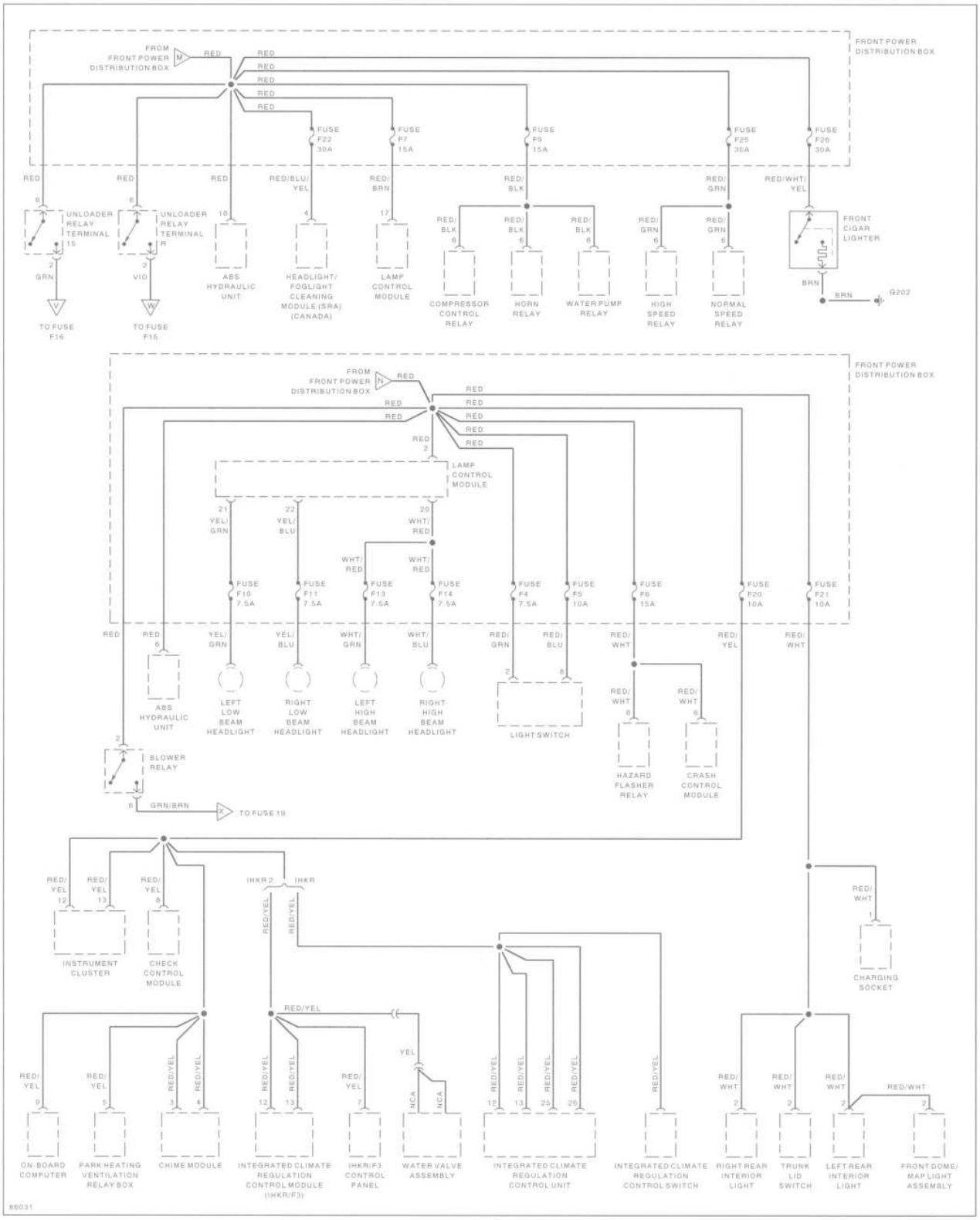

Power Distribution

1990 525i & 535i (3 of 4)

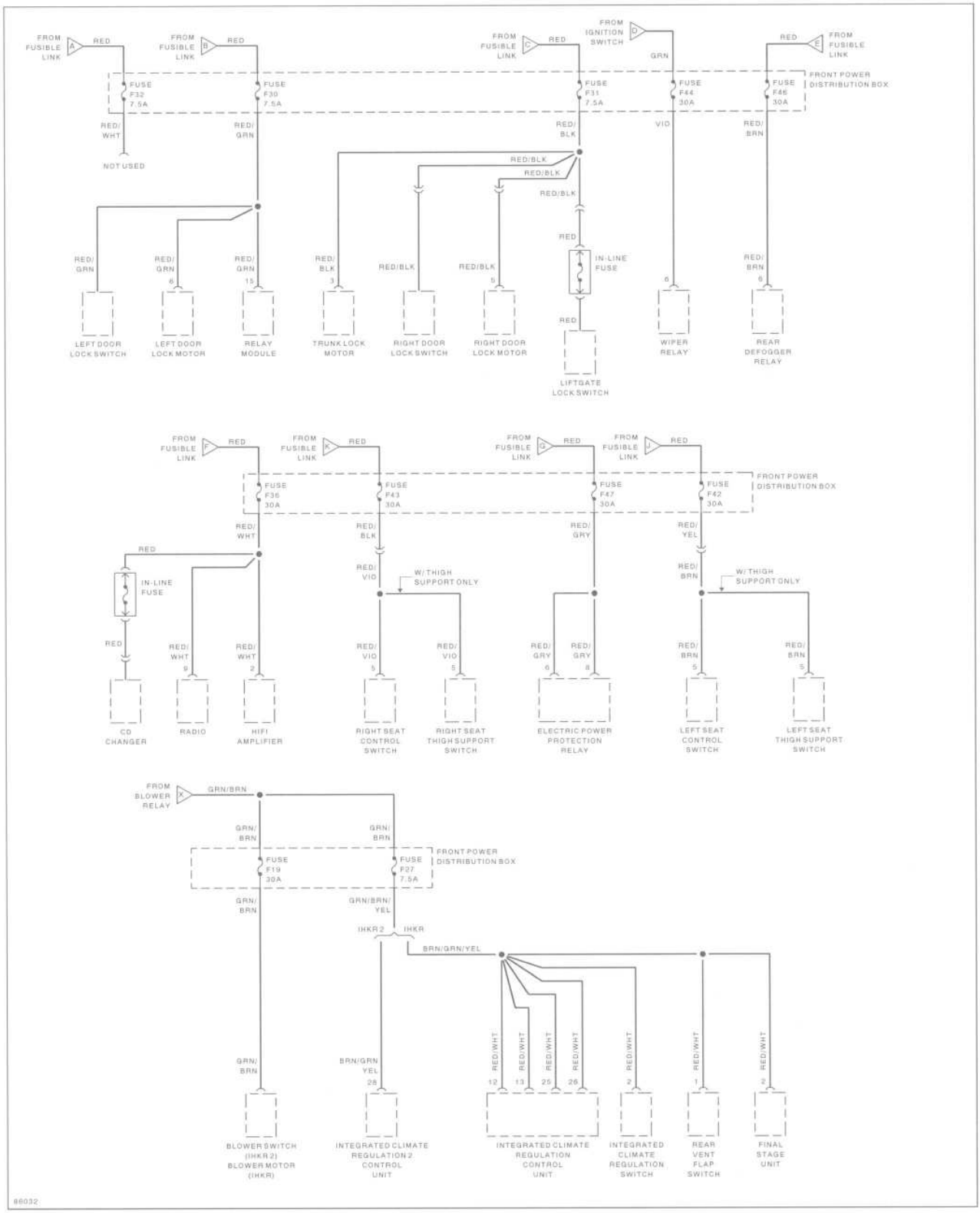

Power Distribution

1990 525i & 535i (4 of 4)

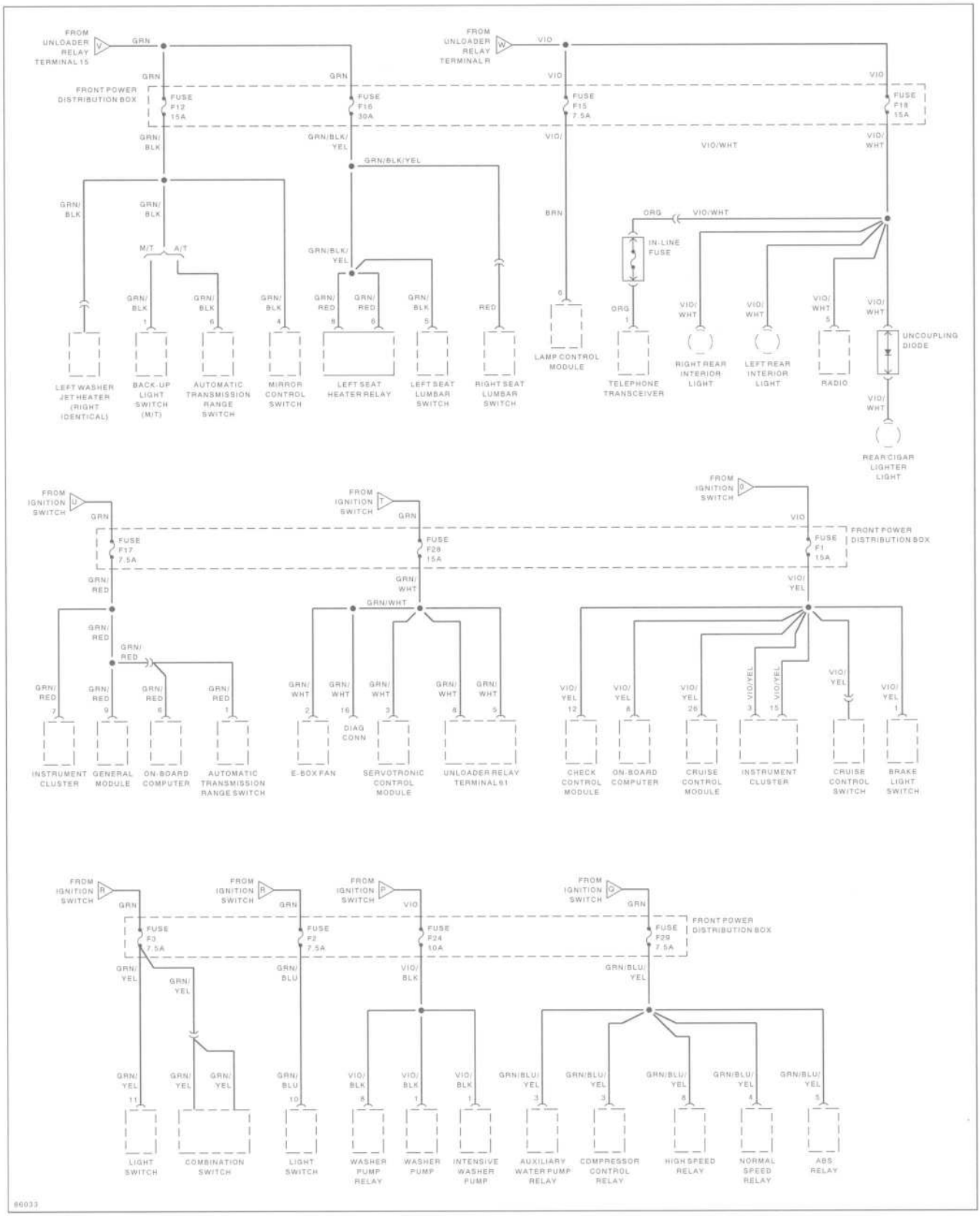

Power Distribution

1991 525i & 535i (1 of 5)

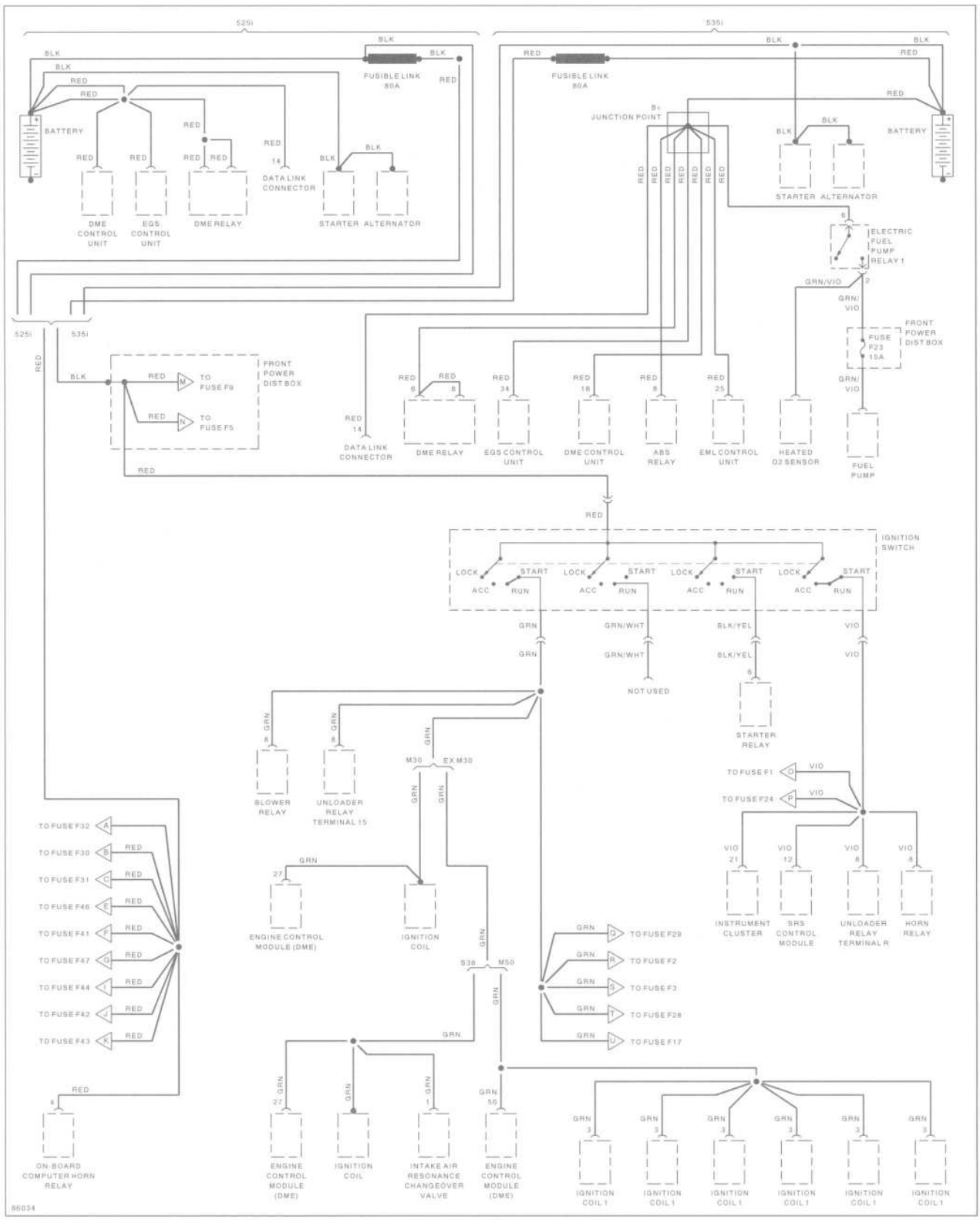

Power Distribution

1991 525i & 535i (2 of 5)

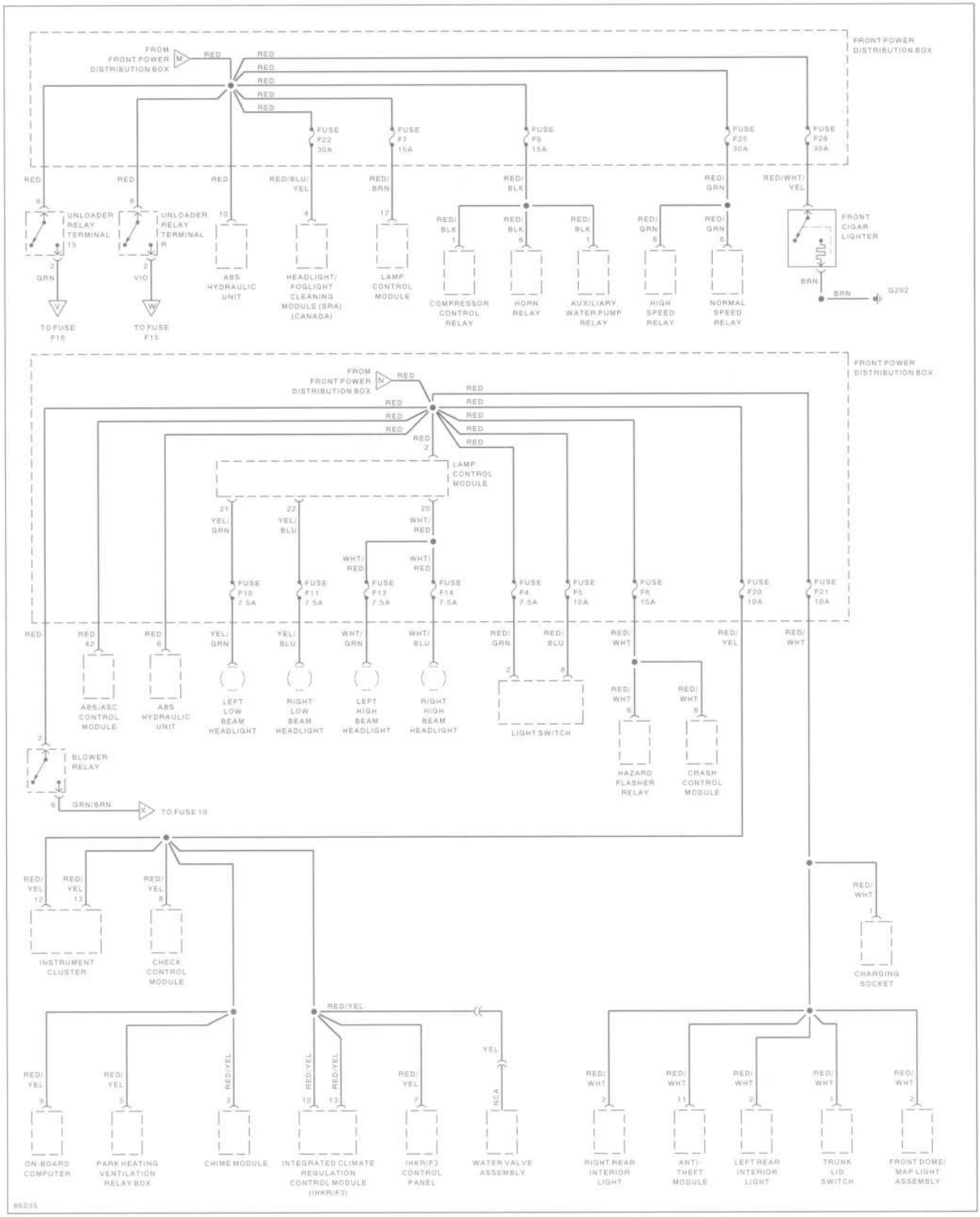

Power Distribution

1991 525i & 535i (3 of 5)

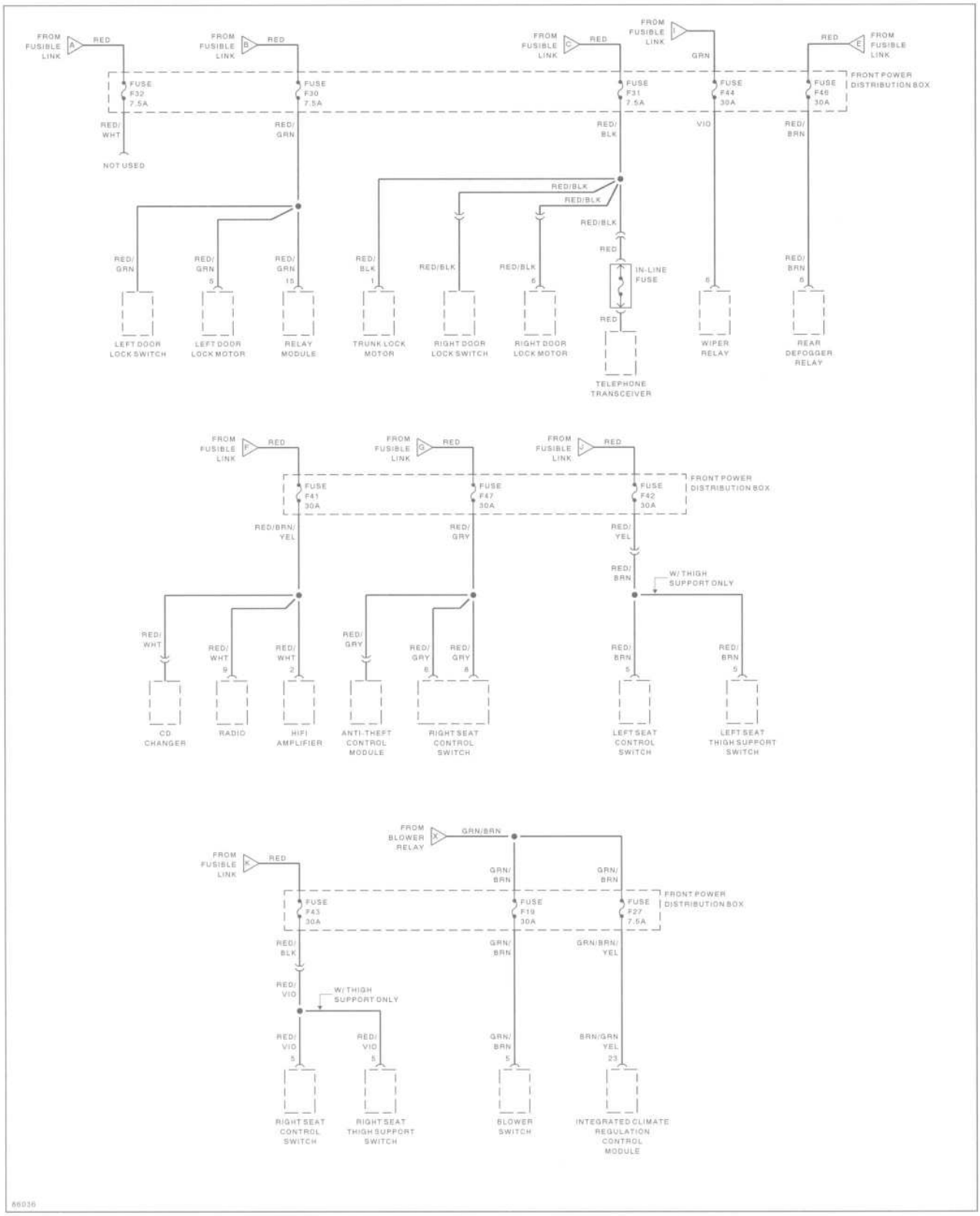

Power Distribution

1991 525i & 535i (4 of 5)

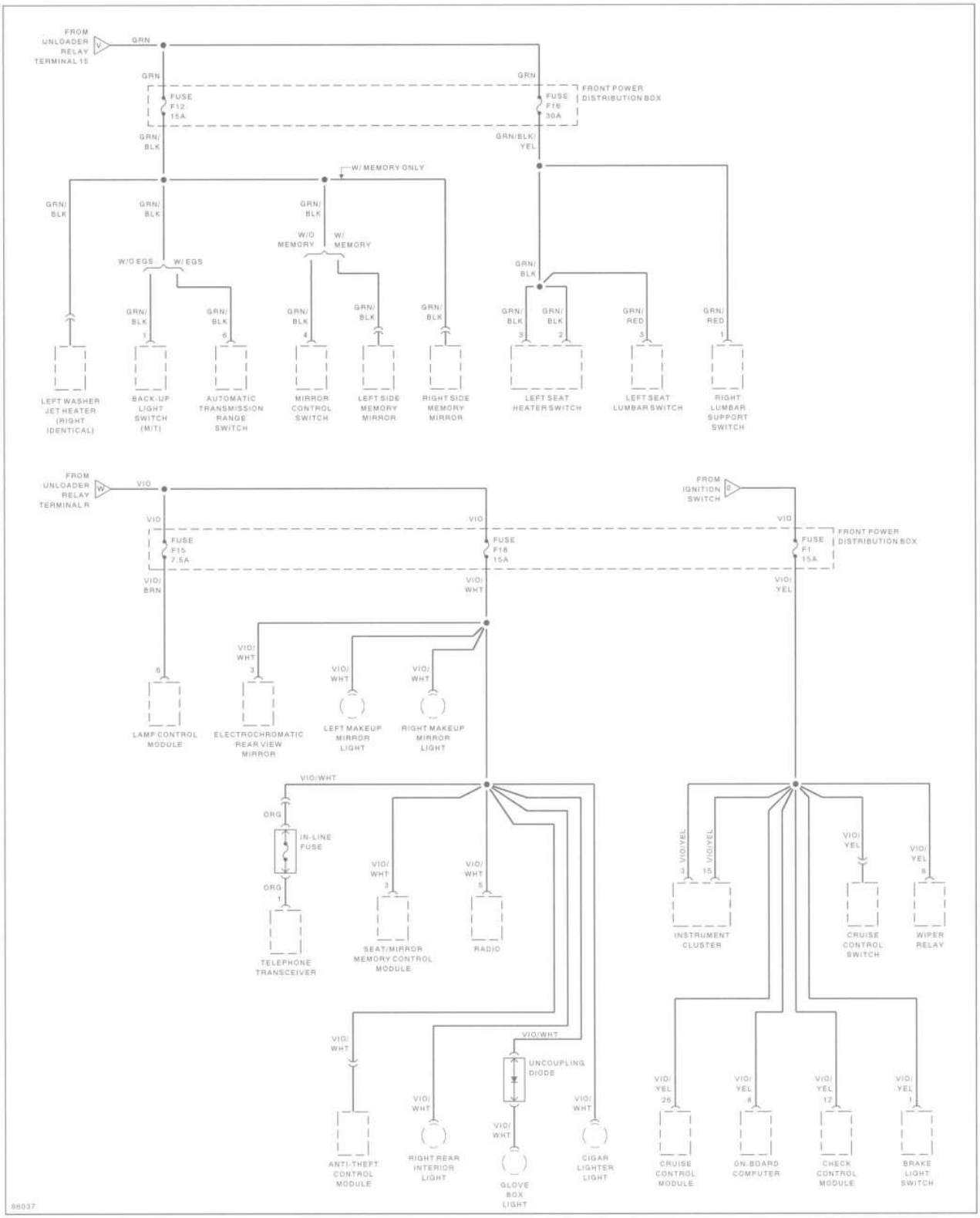

Power Distribution

1991 525i & 535i (5 of 5)

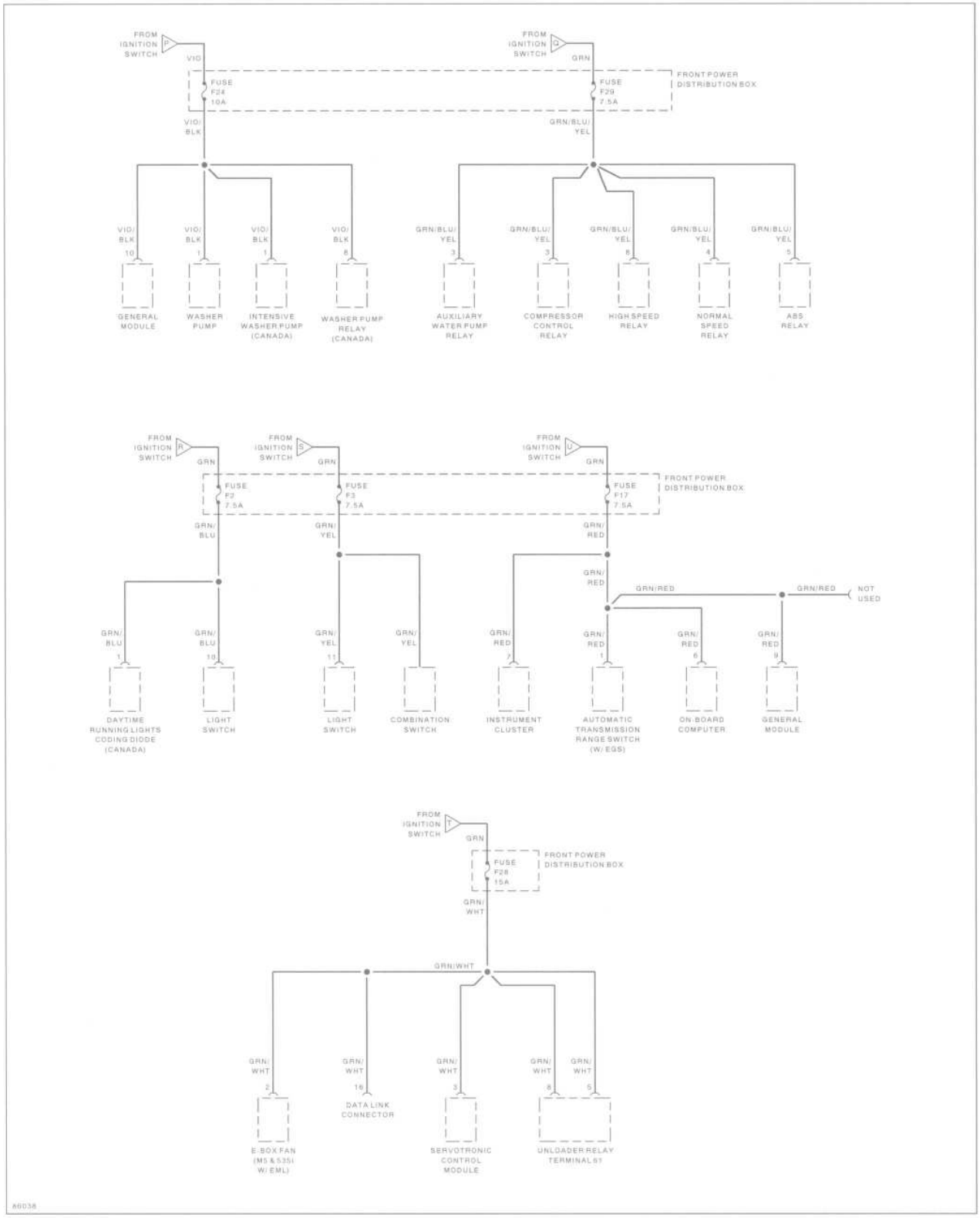

Power Distribution

1992 525i, 525i Touring & 535i (1 of 5)

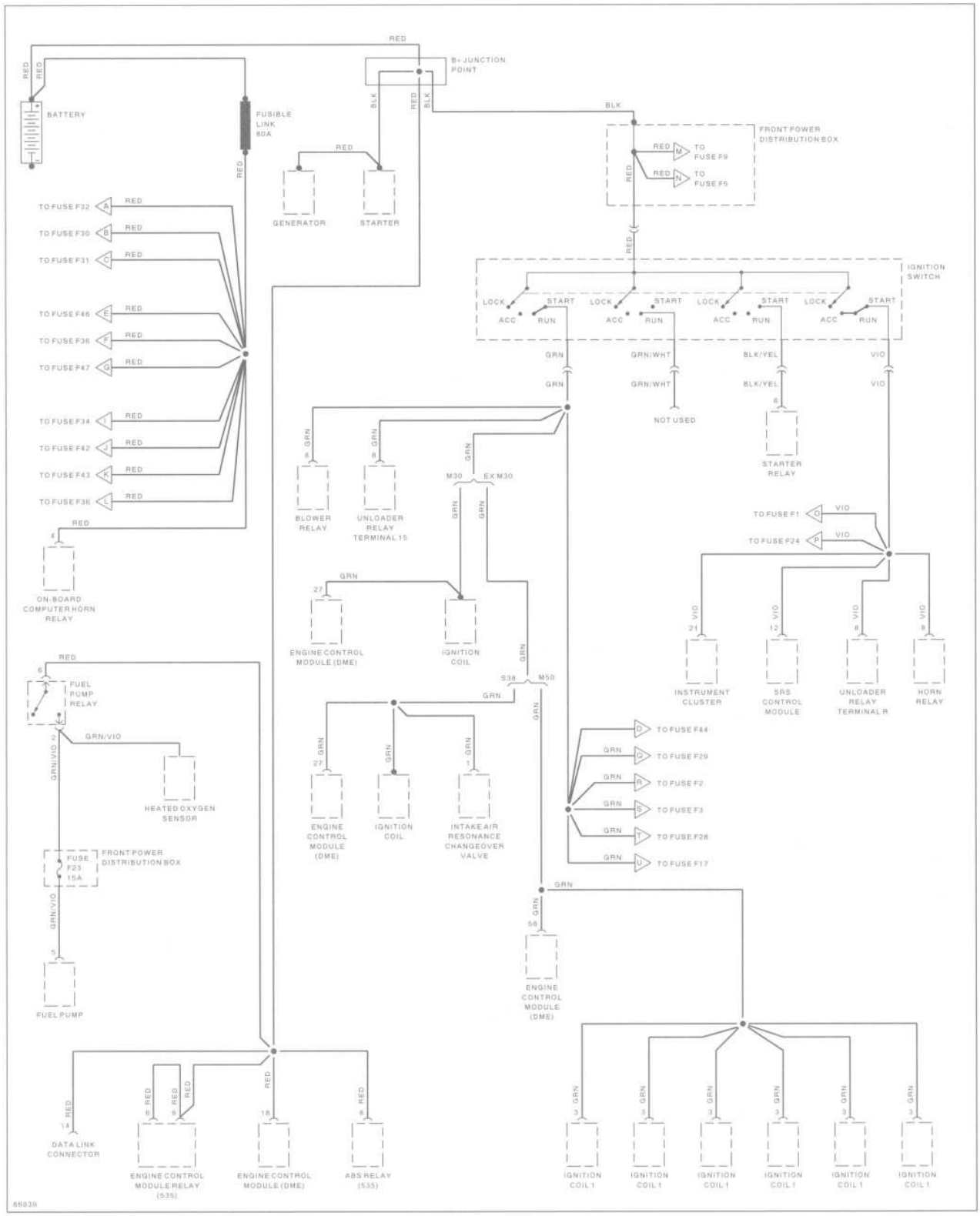

Power Distribution

1992 525i, 525i Touring & 535i (2 of 5)

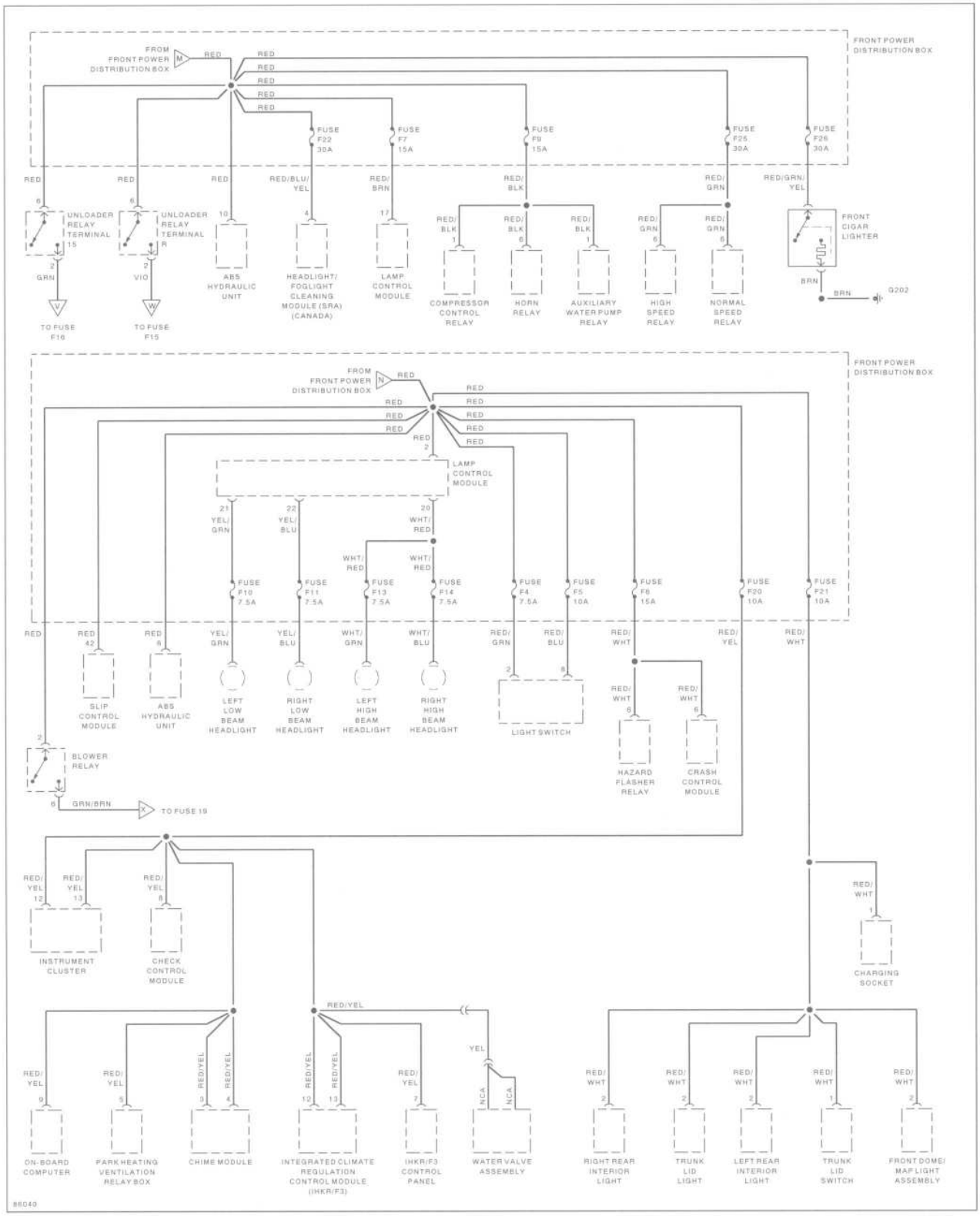

Power Distribution

1992 525i, 525i Touring & 535i (3 of 5)

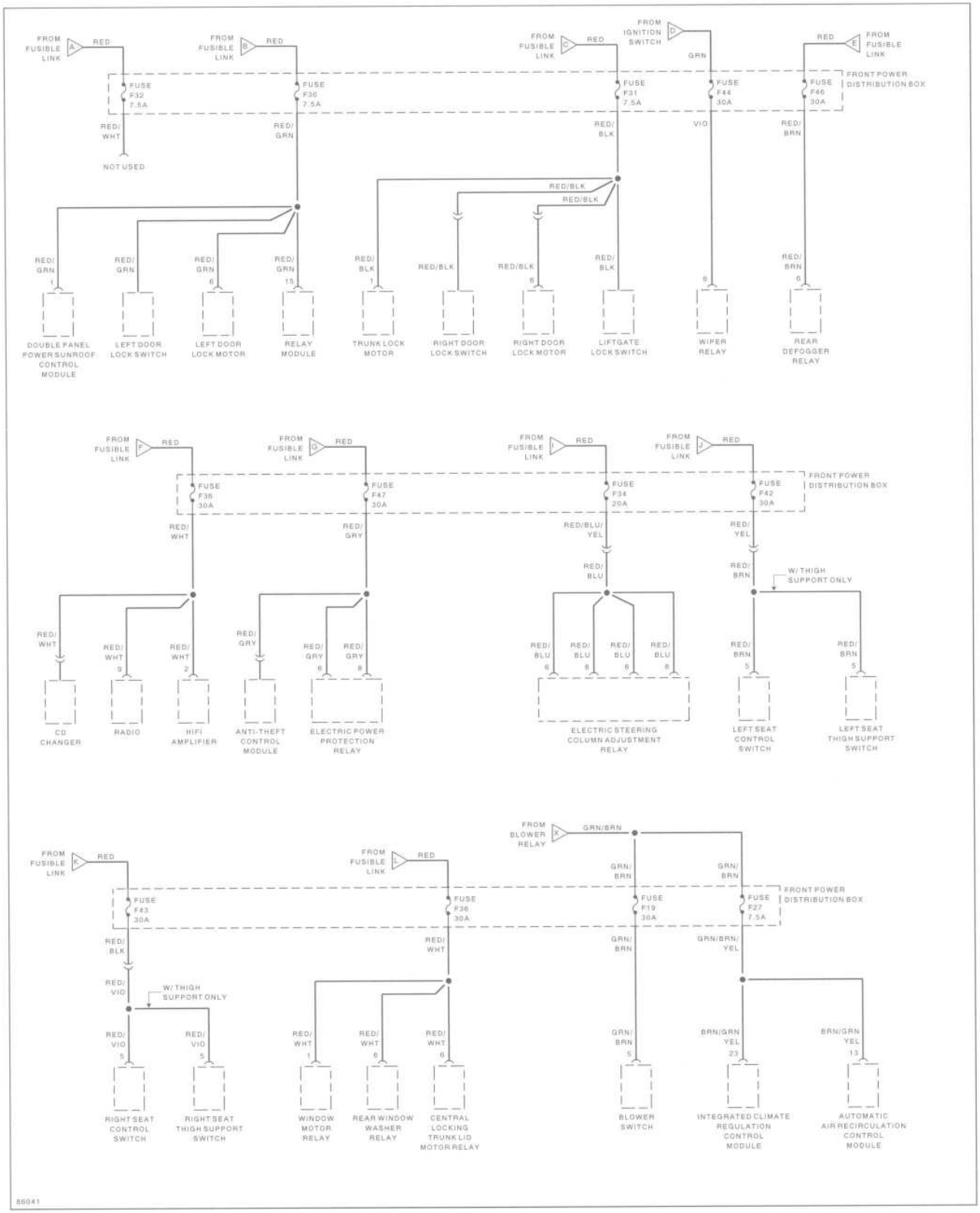

Power Distribution

1992 525i, 525i Touring & 535i (4 of 5)

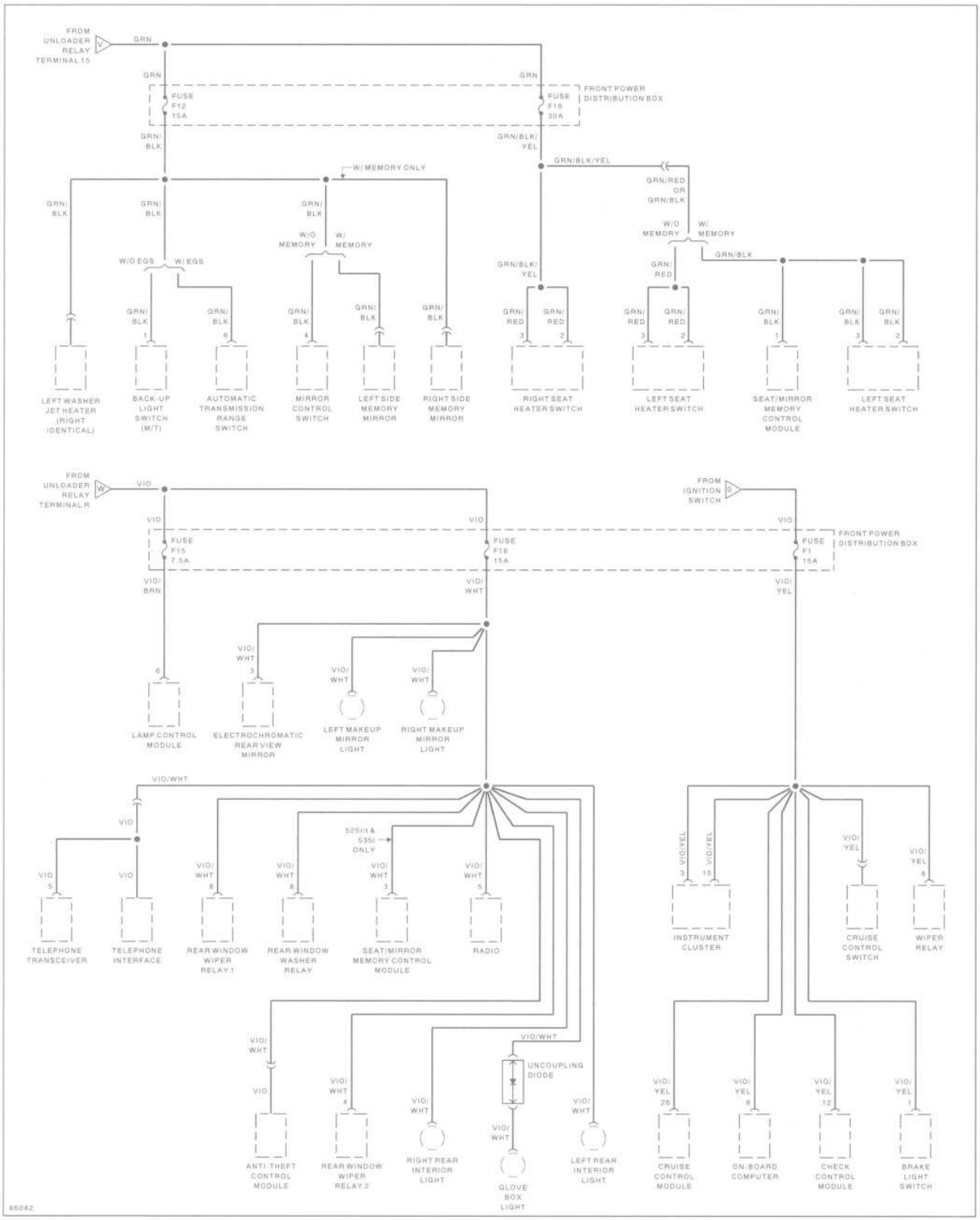

Power Distribution

1992 525i, 525i Touring & 535i (5 of 5)

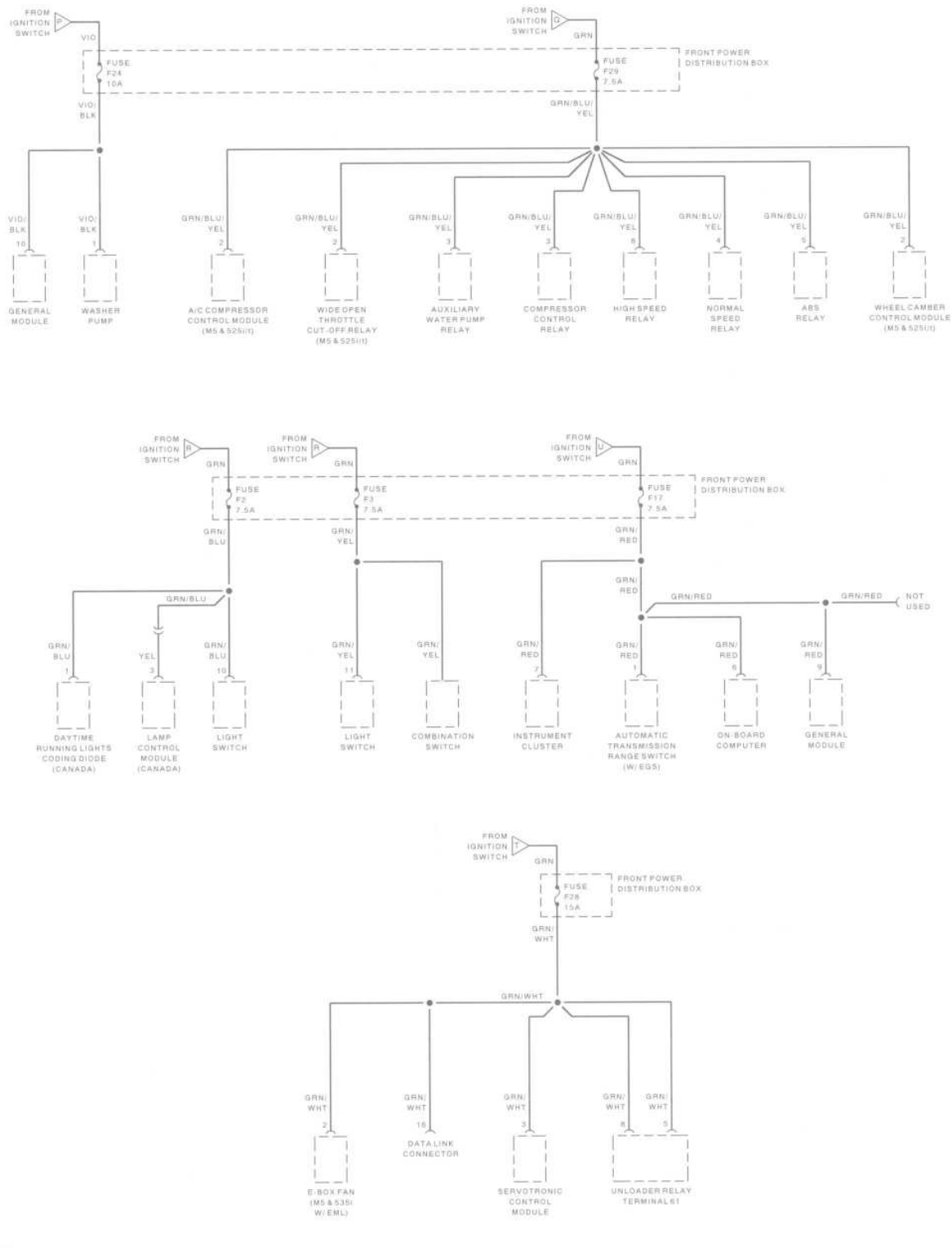

Power Distribution

1993 525i, 525i Touring & 535i (1 of 5)

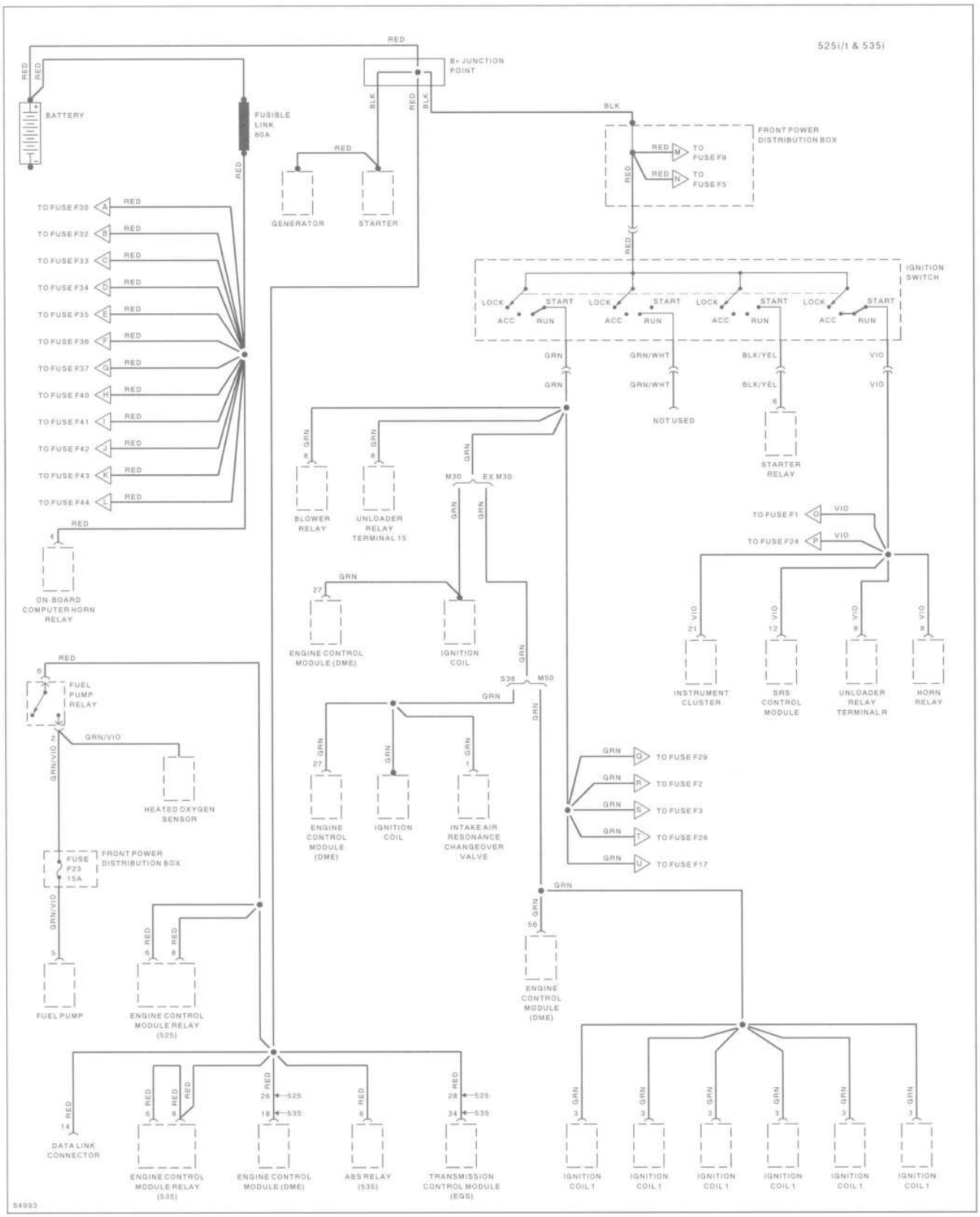

Power Distribution

1993 525i, 525i Touring & 535i (2 of 5)

